ABEC

EDUCATION FOR ADULTS IN CORRECTIONAL INSTITUTIONS:

A BOOK OF READINGS

VOLUME I

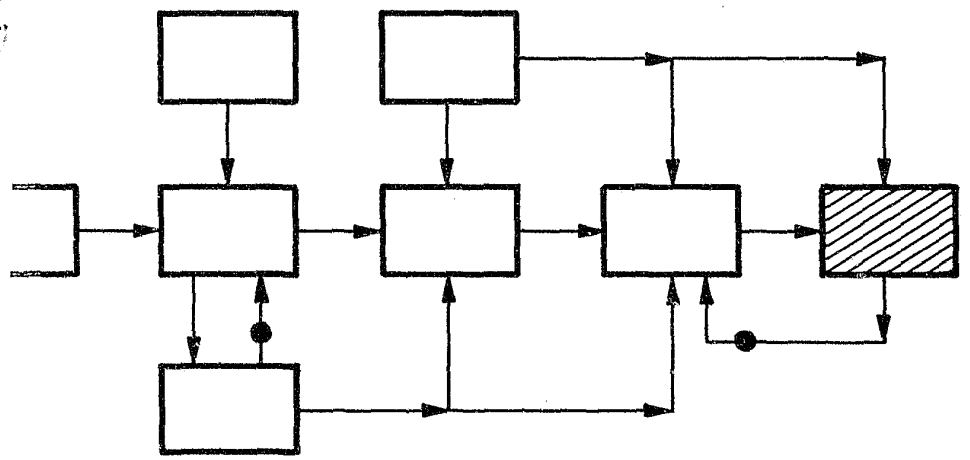

EDUCATION RESEARCH AND DEVELOPMENT CENTER
UNIVERSITY OF HAWAII

EDUCATION FOR ADULTS IN CORRECTIONAL INSTITUTIONS

T. A. Ryan, Editor

In Two Volumes
Volume I

University of Hawaii
Honolulu, Hawaii
1975

This publication was supported in part by a grant from the Division of Adult Education, U. S. Office of Education. Points of view or opinions stated do not necessarily represent official Office of Education position or policy.

INTRODUCTION

> If we are to cut down the high rate and high cost of recidivism, current haphazard and ineffective rehabilitation methods must be re-organized into full fledged programs of career-oriented adult education (National Advisory Council on Adult Education, 1972, pp. 16-17.
>
> To afford an equal chance for civic, economic, and social participation to the large segment of the adult illiterate population in correctional institutions or on parole and probation status, adult basic and career-based adult education programs must be implemented on an all-out basis in the nation's jails, reformatories, penitentiaries, and post-release settings (Ryan, 1972, p. 3).

In the face of ever-increasing acts of crime and violence, and in response to the widespread concern over the problem of crime in America, the development of effective programs to promote the protection of society and at the same time redirect the offender population into constructive roles must be accorded top priority. With an offender group largely lacking the basic skills of gaining and maintaining gainful employment, the need for adult basic education in the nation's correctional institutions is of paramount importance. Far too often released offenders revert to their previous patterns of criminal behavior when faced with the almost impossible task of finding and keeping employment in the free world. The offenders in the nation's correctional institutions for the most part lack basic skills necessary for functioning productively within the accepted norms of society. They have distorted value structures, are handicapped by deficits in communication and computation skills, usually lack interpersonal skills, and are without the educational credentials demanded by prospective employers.

In an effort to provide a systematic approach for meeting the educational needs of adult offenders in the nation's correctional institutions, a generalized planning model was published in 1975 (Ryan, et al., 1975). The Model of Adult Basic Education is intended to provide a basic guide for the design, implementation, and evaluation of delivery systems of adult basic education in correctional institutions. These two adjunct volumes are designed to serve as a supplemental resource for use in conjunction with the Model of Adult Basic Education. The value of these volumes for planning was demonstrated between 1970 and 1972 when selected teams of corrections personnel participating in regional seminars conducted at various sites in the United States as a part of the Adult Basic Education in Corrections Program of the University of Hawaii successfully produced adult basic education delivery system models for implemention in 115 correctional institutions in the nation.

These two volumes are intended primarily as an adjunct to the Model of Adult Basic Education in Corrections. The chapters in these volumes

elaborate on and demonstrate concepts and principles in the Model. Accordingly, the volumes are divided into seven major sections which correspond to the seven major divisions of the Model:

ANALYZING THE REAL LIFE ENVIRONMENT (1.0)

ESTABLISHING A PHILOSOPHY (2.0)

ASSESSING NEEDS (3.0)

DEFINING GOALS, SUBGOALS, AND OBJECTIVES (4.0)

FORMULATING A PLAN (5.0)

DEVELOPING, IMPLEMENTING, AND EVALUATING THE PROGRAM (6.0)

EVALUATING THE TOTAL SYSTEM (7.0)

Chapters 1 through 5 are in Volume I. These chapters consist of 34 articles concerned with the planning of a delivery system of adult basic education in a corrections setting. Chapters 6 and 7 are included in Volume II. The 35 articles included in Volume II are concerned with implementing and evaluating the delivery system.

In each section there are several articles which are related to the central topic. The authors of the articles comprise a group of experts with an impressive background of experience. The sixty-two authors include ex-offenders, educators, penologists, economists, social and behavioral scientists, corrections administrators, and line personnel. No philosophical or policy restrictions were placed on the authors. Thus, a variety of viewpoints and emphases is evident.

The reader will probably gain the most benefit from these two volumes by using them in conjunction with the Model of Adult Basic Education. It is expected that using them together with the Model will lead to more effective and efficient program planning to meet the adult basic education needs of offenders and prepare them for returning to a society in which they can successfully participate and to which they can contribute.

Deep appreciation and acknowledgment are extended to the authors of the articles for the time and effort they have expended to develop substantive supporting volumes to the Model of Adult Basic Education in Corrections.

Honolulu, Hawaii, March 1975 T. A. Ryan

References

National Advisory Council on Adult Education. Annual report. Washington: National Advisory Council on Adult Education, 1972.

Ryan, T. A. Experimental training program in adult basic education in corrections. Honolulu: Education Research and Development Center, University of Hawaii, 1972.

Ryan, T. A., Clark, D. W., Hatrak, R. A., Hinders, D., Keeney, J. C. V., Oresic, J., Orrell, J. B., Sessions, A. R., Streed, J. L., & Wells, H. G. Model of adult basic education in corrections. Honolulu: University of Hawaii, 1975.

CONTENTS

VOLUME I

ASSESSING NEEDS (3.0)

DEFINING GOALS, SUBGOALS, AND OBJECTIVES (4.0)

FORMULATING A PLAN (5.0)

VOLUME II

DEVELOPING, IMPLEMENTING, AND EVALUATING THE PROGRAM (6.0)

EVALUATING THE TOTAL SYSTEM (7.0)

ANALYZING THE REAL LIFE

ENVIRONMENT

(1.0)

Introduction

> We seem to have discarded our sense of reality; we are somehow afraid to look at the truth of our situation.
> Jerry O. Nielsen

Prior to implementing any new programs, or revising a current one, it is necessary to carefully analyze the present situation in detail. The parts which combine to make up the particular correctional system need to be identified, their relationships described, and the parts considered separately (Ryan, et al. 1975).

This first major section, ANALYZING THE REAL LIFE ENVIRONMENT, is divided into two related sub-sections. The first includes the papers written by LaForest, Chandler, McFerren, Davis, Maresh, and Clark. These papers, as LaForest states, detail the need, "at the outset of planning, for determining the present state of the real life world the planner hopes to affect (p. 7). Chandler discusses what exists regarding adult basic education. Chandler discussed the "Adventure in Human Development" of which adult basic education is a part. Included are descriptions of areas where work is being done, and emphasized are current and existing gaps. McFerren explains the need to be knowledgeable about an offender's general situation, and then describes where and how to collect the information needed. Davis and Maresh give additional methods of collecting and utilizing needed information. Clark continues by describing, in general terms, how the information obtained can be used, and more specifically, how it is used at the Federal Youth Center in Colorado.

The second portion of this section consists of the papers written by Grenier, McCollum, Nielsen, Pancrazio, Woodward, and Cooper. Each deals with human concern for the offender, or, as Pancrazio maintains, the need to see the offender first as a human being; a person who happens to be an offender, not vice versa. Each writer emphasizes the need to accurately determine the offender's attitudes, needs, feelings, and motivation prior to setting up programs which attempt to rehabilitate the offender.

If the offender segment of the real life environment is not analyzed correctly, programs are certain to fail. As McCollum so succinctly states, "Many of us have a disconcerting habit of lumping all 'criminals' into a single group . . . . By not meeting human needs, we generate further anti-social behavior (p. 48)." Grenier supports McCollum and goes on to add the need to more closely examine correctional staff attitudes toward residents. Finally, Cooper describes the effects that interpersonal relations and Laing's cyclic phenomena theory can have in a correctional setting. All the above writers deal with the various aspects of the environment which must be examined prior to step 2 in the model process, which is establishing a philosophy.

Reference

Ryan, T. A., Clark, D., Hatrak, R., Hinders, D., Keeney, J., Oresic, J.,

Orrell, J., Sessions, A., Streed, J., & Wells, H. G. Model of adult basic education in corrections. Honolulu: University of Hawaii, 1975.

CONCEPTUALIZING A SYSTEM

James R. LaForest
West Georgia College
Carrollton, Georgia

"System theory," says Knox (1967), "assumes that an agency or other social organization consists of an interdependent set of activities composed of subsystems which function within the larger settings of parent institution and community (p. 1)." Support for this notion is offered by Katz and Kahn (1966) who advance the idea that a social system, such as a correctional institution, may be conceptualized as obtaining inputs from its total environment, and transforming these inputs in some way to enable some product or service to flow into the environment. An illustration of this point can be found by examining the Model of Adult Basic Education in Corrections (Ryan, 1970) or the following simple paradigm:

1. Identify Environment	2. Make Transformations	3. Develop Product

Hilton and Gyuro (1970) strongly stress the importance of initially conducting an assessment of all facets of the system before undertaking further planning. Kaufman (1970) calls this all pervasive phase in his evaluational model problem identification. His commitment to an initial identification of all facets of a program parallels the previous notions. Hartley (1968) in his review of the PPB system of planning refers to this initial conceptualization phase as a rational assessment of resources. Another study, Stufflebeam, Foley, Gephart, Guba, Hammond, Merriman, and Provus (1971), describes it as determining input specification in terms of characteristics and conditions.

Continued support may be found in Morphet and Ryan (1967) who claim that effective planning is not a process of speculating but is a rational analysis of pertinent information from the environment to be affected. Coombs (1968) compares this process to a doctor who, while not having a complete knowledge of every detail of a human being's system, finds solutions to problems by "concentrating upon selected critical indicators and relationships within the system and between the system and its environment (p. 8)." Morphet and Lesser (1968) deplore the fact that curriculum planning has been primarily a series of segmented operations with little attention being given to the totality and meaningful relationship between parts. Cook (1966) notes that objectives cannot be met without determining "what facilities or services will be needed to complete objectives (p. 5)."

It is obvious that these theorists, while using different terminology, demonstrate several commonalities. They all believe that inputs into a system must be identified carefully before subsequent planning. Each feels that the data accrued while conceptualizing the system will be needed in all later decisions. They also would agree with the notion

that failure to make an exhaustive and thorough analysis of all factors in and out of the system's environment will appreciably affect the implementation of the program plan. Finally, they would all agree that because all elements of a system are interdependent, failure to acquire complete data relevant to one element will restrict development of all others.

One systems technique which organizes, simplifies, controls, and combines various parts, functions, and processes is modeling. According to Ryan (1970), the Model of Adult Basic Education in Corrections (ABEC) is the implementation of system theory. Ryan (1970) points out "that as abstractions of reality, models provide means of relating and combining elements to create new wholes and explain complex processes or systems by analogy (p. 5)." The ABEC model provides guidelines for an early, exhaustive, interrelated, and usable compilation of real life data. Ryan has identified this critical initial stage with the describer, "conceptualize system."

There are four major tasks inherent in this subsystem. First, it seeks to describe the general setting of the institution and surroundings affecting the institution. This subsystem should generally describe in narrative form the overall institution. Secondly, it provides more detailed identification of the functional elements operating within the internal environment. At this point the planner provides data to describe the various treatment programs operating within the institution in terms of educational and program service functions. He also needs to provide supportive data on items such as maintenance, food, medical and dental assistance, business management and personnel. To complete the description of his present internal environment, the planner identifies data describing the security, industry, and administrative functions and seeks to show their interrelationships. It is essential that all data be concrete and not projections of what is being sought. The continuation of a detailed examination is then logically extended to identifying the data affecting the various functional elements operating within the external programs.

This description of the present external program is most critical to future planning. These agencies, organization programs, and services operating outside of the institution will have serious effects upon the activities of the institution. For example, a technical school near a minimum security institution may offer programs that are available to offenders without the need for costly duplication within the internal environment. It is apparent that a planner cannot be efficient in these days of limited resources and budgets without maximum use of external programs whenever possible.

These three subsystems contain the essential functions that will later affect the entire process and subject of the delivery system. One cannot overemphasize the importance of having all of the data within these three subsystems in a coherent and usable format. The planner will need to refer to this data at many planning stages or levels. The system next provides the planner with a process for identifying restrictive elements

most commonly called parameters.

It is necessary to digress at this point to develop a conceptualization of the term parameter. Ryan (1970) defines a parameter as "an essential characteristic or condition (such as a budget) which is established in the design and operation of any system (p. 13)." Ryan goes on to note that a parameter has a numerical value, which can be changed, either more or less. While the numerical value can be changed, the parameter cannot. Hence, a budget may rise or fall but the planner will always be faced with consideration of a budget element.

Since parameters have values, the model needs to provide a subsystem for quantifying the numerical values fo the previously identified parameters. For example, the budget of an institution is a parameter, but when the planner notes that he has a $60,000 budget he has quantified his budget parameter by identifying its numerical value.

All active systems must provide for data flow. This systematic information-getting is closely tied to the ongoing functions of the system and provides as a major function routine control over operations. The ABEC model employs two describers of this systematic information flow. One is called "feedforward" when the data is needed in subsequent subsystems, and the other "feedback" when data from a later system is returned to help describe a previous sub-system. The flow of data may be described as an information input or signal to the system about conditions inside and outside of the system. No system can exist without this systematic information flow.

One final note on this topic needs to be made. Katz and Kahn (1966) note that this information can be negative or positive. Negative feed points up dysfunctions in the system's relationship, while positive feed points up functional aspects of the system's relationships. Feedforward and feedback information flow is a selective process which makes available to the system information needed to maintain the character of the system and correct for its own malfunctioning or changes in the environment.

Conclusion

This paper has identified the need, at the outset of planning, for determining the present state of the real life world the planner hopes to affect. It cited various theorists who support this contention. It discussed the various components and functions of this initial activity. Four major functions: describing institution, describing present internal environment, describing external programs, and describing present parameters were discussed, and the importance of selecting real and pertinent data to complete these functional descriptions was stressed. Much stress was put upon the subsequent role to be played by this data in the planning process. This paper has not extensively identified every function within a subsystem since this has been accomplished in the Adult Basic Education in Corrections model (Ryan, 1970).

It is necessary once more to note the importance of conceptualizing the system exhaustively and accurately. The planner must remember that a system consists of interrelated subsystems. A system, points out LaForest (1970), is only as strong as its weakest part. Inadequate data at any point can undermine the usefulness of the system as a viable planning instrument of change.

References

Cook, D. L. Program evaluation and review technique: Applications in education. Washington: U. S. Office of Education, Department of Health, Education and Welfare, 1966.

Coombs, P. H. The world educational crisis: A systems analysis. New York: Oxford University Press, 1968.

Hartley, H. J. Educational planning-programming-budgeting: A systems approach. Englewood Cliffs: Prentice-Hall, 1968.

Hilton, E. P., & Gyuro, S. J. A systems approach - 1970 vocational education handbook for state plan development and preparation. Frankfort: Kentucky State Department of Education, Bureau of Vocational Education, 1970.

Katz, D., & Kahn, R. L. The social psychology of organizations. New York: John Wiley and Sons, 1966.

Kaufman, R. A. An integrative model for the improvement of education: Planning and changing. Journal for School Administrators, 1970, 1, (3), 122-130.

Knox, A. B. Social system analysis of the adult education agency. New York: Columbia University, 1967.

LaForest, J. R. System design in adult basic education. Paper presented at Conference of 100+, Chicago, Illinois, October 1970.

Morphet, E. L., & Jesser, D. L. Planning education for the future no. 5, emerging designs for education. New York: Citation, 1968.

Morphet, E. L., & Ryan, C. O. (Eds.). Planning and effecting needed changes in education. New York: Citation, 1967.

Ryan, T. A. (Ed.). Model of adult basic education in corrections. Honolulu: Education Research and Development Center, University of Hawaii, 1970.

Stufflebeam, D. L., Foley, W. J., Gephart, W. J., Guba, E. G., Hammond, R. L., Merriman, H. O., & Provus, M. M. Educational evaluation and decision making. Itasco, Illinois: F. E. Peacock Publishers, 1971.

AN APPROACH: ADULT BASIC EDUCATION IN THE DEVELOPING FIELD OF EDUCATION FOR ADULTS

Barbara A. Chandler
U. S. Office of Education
Washington, D. C.

It is the purpose of this paper to present what the title suggests; "an approach" to the field of adult basic education. The approach selected is really an assumption: That adult basic education is a part of an emerging professional field - that of Education for Adults. This paper will present an overview, suggest some major categories to consider and raise some questions for discussion.

There is a time-worn story that is pertinent that goes something like this: Tourists were visiting the site of a building that was being erected. An interested man in the group approached one of the workmen and asked him what he was doing. The man replied, "I'm laying stone." The tourist approached another and asked the same question. This man straightened up, backed off looking upward and replied: "Sir, I am building a cathedral."

With that rather idealistic opening let us note that we will be concerned primarily with the laying of stones and the other essential component of our adult basic education enterprise. But for a few minutes let us take the larger perspective and look at some of the aspects from this point of view.

Primarily we will consider two aspects; the first very briefly, the second in some detail. First: Increasingly the feedback from the field is telling us that we are engaged in an adventure--"an adventure in human development"--a reclamation of human resources in many instances. We have story after story of what men and women become when education opens doors and gives them tools. The film strip "Technology in Adult Basic Education" has the theme, "The joy of knowing - the security of knowing how." One leader in the field, Dr. George Aker, believes "We have not a minute to lose in beginning what may become the greatest battle of mankind." We do have a front row seat for the drama of change - individuals, their families and communities. Better than that - we are participants. So we keep in mind and relate our efforts to the concept, The Adventure in Human Development. It is this aspect that leads to an exciting variety of creative arrangements and activities from tutoring, role playing, video tape recorders, talking typewriters and CAI, to visits to supermarkets, libraries and city halls; from voter registration, medical examinations, providing glasses, and dentures to child care for young children, study halls for others. Whatever the human need, whatever the educational resource, all are part of the enterprise.

From a weapon in the war on poverty, adult basic education is showing its mighty potential as a tool for social change. Through the decades

streams have been flowing into this enterprise which contributed to its development. They were drawn on in making the case for federal support for a decade before the legislation was enacted by Congress in the 1965 Amendments of the Economic Opportunity Act. Agencies, church and community groups, Laubach literacy "each one teach one," business and industry, extension service, adult home economics, adult public education, opportunity schools, vocational education, and the Americanization program for foreign born, many have had and still have a part in helping the undereducated.

So as we approach adult basic education one characteristic is apparent: we are a part of a "Movement"--a movement with a terrific sense of urgency. All of these varied efforts are a part of the movement--never coordinated, and really never focused on the broad need, or the massive problem. However, with the War on Poverty, basic education took on the aspects of a crusade--a crusade for human betterment.

Second: From The Adventure in Human Development we turn to another approach. We are engaged in the process of developing a professional field of education. In this country, other fields such as elementary, secondary, and higher education have evolved over a period of more than two centuries. But one of the factors brought by change is that time has run out. We cannot wait to "evolve." An analogy: For over half a century from the first flight at Kitty Hawk, airplanes evolved with new needs and new possibilities determining the development. Suddenly a breathtaking commitment--travel in space and a man on the moon. In a decade the reality is at hand.

In adult basic education in 1965, another commitment, less spectacular but as dramatic in another way, was to bring more than 24 million adults to a functional literacy level. But more than that, to help them overcome generations of ignorance, hopelessness and other evils of poverty and to become self-motivated, self-reliant, independent, contributing, and self-fulfilling human beings. And beyond this to the underlying goal of the development of this profession, extending education to the adult population of the nation, education of a quality that is both need-meeting and goal-fulfilling.

With the premise that adult education is an emerging professional educational field, several questions must be raised: (a) What are the characteristics of a professional field? (b) What are major components that must be developed? (c) What criteria are there for assessing the professional quality, or the effectiveness? (d) What research and experimentation has been done and what has been learned? (e) What research needs to be done and with what priorities? (f) What resources are available for use in the development of the field? (g) What is the relationship of this developing professional field to other professional fields in education, both those that have long existed and newer ones developing? (h) What is the relationship to professional fields other than education? (i) What can help promote qualities of excellence, sophistication and authority as a field?

Now, turning our attention to the professional field we can identify some characteristics that are noteworthy. A professional field has:

1. A commitment, and overarching purpose.

2. A philosophical basis, defined goals and objectives.

3. Integrity as a field, a stated or understood code of ethics, standards both for the field and for the various components. For example, standards for professional training and standards for performance.

4. An internal sort of self-enforcing mechanism.

5. Self-renewal elements to keep the field dynamic.

6. Numerous components that share mutual goals while having individual purpose and objectives; for an educational field this would be elements such as professional training, curriculum development, evaluation.

To move on to adult basic education in the professional field of education for adults, the special Projects have a most significant contribution to make in the development of the field. At this time we will identify six major components recognizing some areas where considerable work is being done and at the same time emphasizing serious gaps.

1. Philosophy - commitment, goals and objectives. Certainly we have these but many of you have indicated that stating them is a priority for adult basic education. Without such a statement, programs and projects are organized and administered without the focus, thrust, and coordination that this statement would provide. Commitment and goals must move from vague generalities to succinctly stated specifics that serve both as a blueprint for planning and a basis for evaluation.

2. Research and experimentation provide essential elements for the development of the field. This may be as simple as action research and experimentation where a teacher or teacher aide is trying out new activities; it may be implementing the most complex and sophisticated research design. The point that we want to make is that searching, questioning, and experimenting <u>must</u> be an integral aspect of this dynamic field and special projects must lead the way. We already know much more than we are using. Equally as urgent as our need to learn is our need to get what we are learning into the field; to use what we know.

There are two essentials for professionals engaged in activity such as ours that should be stressed. These are RESPONSIBILITY and ACCOUNTABILITY: responsibility to the commitment and to the particular goals and objectives for which the project exists; accountability in all aspects--fiscal accountability, accountability in management and administration, in program content, in effectiveness of performance.

3. Design, structure, organization, and administration. This relates to the delivery of the educational service. Here we are concerned with the learning environment, adapting programs to the needs and conditions of a particular population, in other words, efficiency in operation. These are management items. They are also opportunities for creative planning and operation.

4. Development of professional teachers, administrators, and other personnel. In any professional field the quality of the enterprise depends to a great extent on the performance of the personnel involved. All activities related to professional education and development are involved.

5. The learning activity--curriculum, including materials, media, activities. This is the critical area, all other activities exist to bring the participant and the learning situation together in such a way that progress is made toward the desired goals. This is the real testing ground. It may take place in what appears to be a traditional school setting--probably too often does--but it is more than schooling. It may take place in exciting new ways whether in a learning center or with a home-visiting education aide. In adult basic education the "where" is important and so are the "what" and "how." All should be subjected to the test of relevancy. The "need to know" must have priority; "nice to know" then adds dimension and variety; "irrelevant" is inexcusable when education is the essential ingredient for achieving independence and self-fulfillment. Our approach and point of departure must be directly related to the conditions, hopes and aspirations of a particular group. This necessitates involving the learner in every aspect of the process. And further, we must be responsive to NATIONAL priorities.

6. Evaluation. Herein lies perhaps our greatest need for research experimentation and demonstration. We must grow in our ability to ask the right questions, grow in insight, perception, sophistication and skill. Evaluation that is systematic and on-going, special evaluation for particular objectives, evaluation involving in-depth studies are a few that are needed.

A critical need for programs such as adult basic education is the development of "social indicators" which we can use to determine the effectiveness of programs. Economic indicators are comparatively simple--new jobs, higher wages, promotions, purchasing power. But getting to the changes in the individual, in his family and in his community, this is considerably more complex. However, we have begun and this brings us back to where we started with our commitment and we hear the voice that says, "Not what we want for people but what they want for themselves is the place to start."

Conclusion

At the Annual Meeting of the International Reading Association, Dr. Arthur Gates was a keynote speaker. Retired for a number of years,

this elderly leader, still a bright light in the field, gave the teachers a mandate that speaks to those of us in adult education. He challenged:

> Rid yourselves of customary caution and timidity, asking for small changes. Demand the big things. Don't join hands in establishing the status quo. Set sights and goals in keeping with the space exploration and organ transplants. Dare and do!

THE PROCESSING OF INFORMATION FOR A SYSTEM OF ADULT BASIC EDUCATION IN CORRECTIONS

Tom McFerren
Federal Penitentiary
Atlanta, Georgia

Introduction

Before attempting to alter the behavior of any individual it is to the advantage of those involved with the redirective process to be knowledgeable of the offender's general situation. This involves the offender's value system and social-cultural background.

Purpose of Gathering Offender Information

Before any type of recommendation by the staff is envisioned concerning the offender, a battery of information must be collected if any relevant decisions are to be made in conjunction with program implementation. For obvious reasons the information gathered must be sythesized and assimulated towards a meaningful and realistic review of the situation at hand. After this material has been assembled, the needs of the offender can become more clearly identified.

Types of Offender Information Pertinent to Establishing Goals

Before educational goals can be established to fulfill the individual needs of the offender, certain information must be gathered including: age; length of sentence, prior offenses, type of felon, social, economic and family data, former education, skills, interests and hobbies, employment data, general intelligence, academic achievement level, psychological aptitude, general personality traits or characteristics, leisure time activities, and other data of relative importance that may indicate a specific need of the individual.

Sources of Offender Information

External information sources are many. Most information, in general, is available within the community from which the offender came. More specifically, sources within the community may include: business associates, friends, family and relatives, employee supervisor, public school system, fraternal organizations, local police force. External information sources available somewhat distant from the immediate community may include: military records, records from medical treatment centers that may reveal drug abuse or alcohol abuse, or records from other penal institutions.

Some information is gathered after the offender is placed in custody.

This internal data may be extracted from the presentence report, interviews, medical reports, housing and work detail supervisors reports and disciplinary reports. The personal interview is a useful tool in finding the offender's interest's, values, attitudes, needs, goals, personal motivation and past history.

The economic status of the offender is usually less than that of the average citizen. Contributing to the low earning power are offender values of preparation for employment during the ages that this educational process is usually accomplished. Since they deviated from the normal pattern of schooling, they are unadapted to the technical climate of our economy. They are trained as unskilled laborers and jobs in these areas many times are not appealing to the labor force. Also, the unskilled have smaller paychecks and a limited future for advancement. The unskilled work force is sometimes migratory and most often of short duration which makes the work situation more unpleasant to cope with. Usually tedious and physically unskilled work is demanding. This adds another undesireable feature to a bad situation.

As indicated on the following page, a survey processed by the U.S. Department of Labor depicts reality to the ex-offender. Notice that unemployment is higher with less education and fluctuates in accordance with race, age, and vocational skills.

Opportunities for offender's to increase their potential earning power during confinement is essential to the redirection process whether the growth be academically or vocationally oriented. State certification of the operative programs is a must if it is to be of practical value to the offender.

Job surveys and job analysis are essential to maintain a modern program and to formulate new goals. Continuous revisions will occur within the curriculum of modern programs if technology continues to increase as rapidly in the future as it has in the past.

Some groups—ex-offenders, for example— have difficulty participating fully in the American economy

In terms of education and skills, offenders rank far below average.

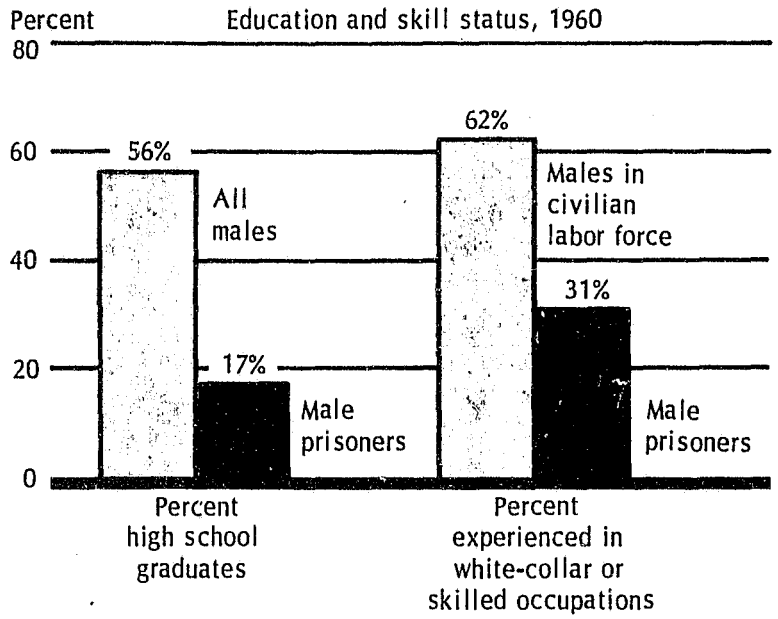

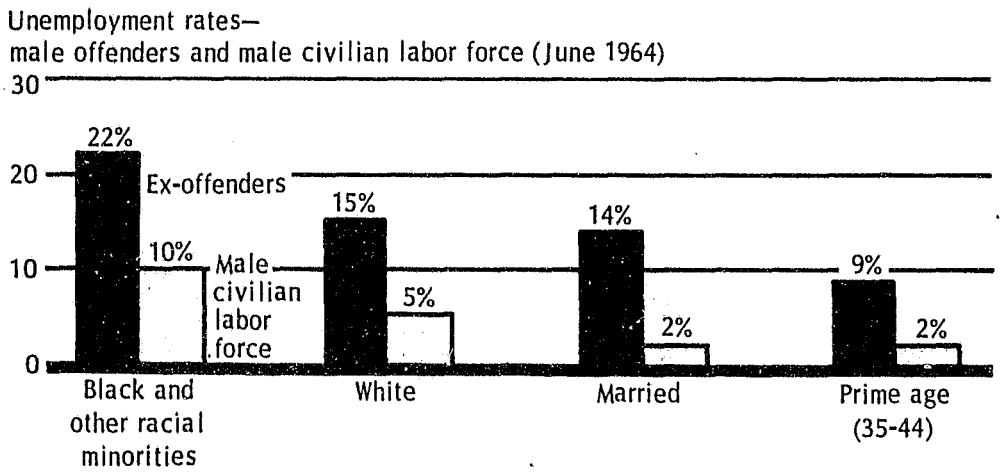

Unemployment is much higher among all groups of ex-offenders

(Unemployment contributs to high rates of rearrest and imprisonment.)

- 63% of all those Federal prisoners released in 1963 were rearrested within 5 years.

- More than one-half of inmates sampled in skill training programs had previously served prison sentences.

Rehabilitation programs and employment opportunities are needed to break the cycle of poor education, unemployment, and repeated offenses. Ex-offenders are an underutilized manpower resource.

Figure 1. Employment of ex-offenders. (From Opportunity and Challenge, U.S. Manpower in the 1970's by the U.S. Department of Labor, 1970.)

PROCESSING INFORMATION ABOUT OFFENDERS

Don Davis
Palmer Correctional Center
Palmer, Alaska

Adult education as defined today has grown from a vaguely known process to its present day status of being continually in the limelight. Persons from all walks of life are aware or participating in adult basic educational programs. It has infiltrated businesses, industries and is becoming available to all segments of social structure.

In correctional institutions, adult education has grown from obscurity to its present day level. It has become a common everyday word in correctional institutions since it has become part of correctional theories towards progressive programs.

Knowles (1970) states, "Most of what is known about teaching has been derived from experience with teaching children under conditions of compulsary attendance." He further states, "Most theories about learning-teaching transactions are based on a definition of education as a process of transmitting the culture," and also, "the transmittal of knowledge (p. 37)." This definition was somewhat true at one time since what a person learned in his youth would remain valid for the remainder of his life. This brought on the archaic assumption that after a person left his academic school years, it was not really necessary to further his education and possibly brought on the old saying "you cannot teach an old dog new tricks." This assumption is not true anymore since the accelerated pace of social changes have dictated a person must continually learn or he will soon find himself "behind the times."

Correctional institutions have encountered the same problems as the "free world" in regard to adult education. History of institutions indicates, in the beginning, a total lack of education until the present day standards which is an adaptation in many cases of children's traditional school room methods. Many educators previously realized adults cannot be taught the same as children, but everyone seemed to be reluctant to part from the traditional methods. The accelerated pace of living and changing times has forced adult education to become of age. In recent years, many studies have been made and society is beginning to realize adult education is a prime concern in all of our lives and this concern has become very apparent in correctional institutions.

Adult basic education in corrections has been defined in many ways. Generally, many view it as a method, program, or tool to return the offender to society as a law abiding citizen. In many institutions this appears to be the ultimate goal of adult education and we are beginning to realize there are more far-reaching effects. Using adult education as an institutional tool for release purposes, it usually focuses the attention on the individual offender as being an object of clinical attention. This clinical approach is based on psychological and psychiatric

knowledge and insights, and sees the offender as an individual whose attitudes, emotional maturity, and social relationships need diagnosing and treatment. This tends for correctional personnel to become dependent entirely upon diagnostic appraisals of the individual and tends to forget this person came from some other social environment.

According to Knowles (1970): "The primary and immediate mission of every adult educator is to help individuals satisfy their needs and achieve their goals." Furthermore, they should be considered "as helping individuals to develop the attitude that learning is a lifelong process and to acquire the skills of self directed learning (p. 23)." In this context, it would tend for institutions to break away from an entirely clinical approach and view it from another angle and that would be the community integration approach. This would give corrections an additional view of the offender and he would then be treated as a product of social environment, the community, and neighborhood he came from. This would allow correctional programs to become more fully developed and especially remedial programs of adult education and vocational training.

The task of corrections was formulated by the President's Commission on Law Enforcement and the Administration of Justice, and the following is an excerpt from this report.

> The task of corrections, therefore; includes building or rebuilding solid ties between offender and community, integrating or reintegrating the offender into community life, restoring family ties, obtaining employment and education and securing, in a larger sense, a place for the offender and the routine functioning of society (President's Commission, 1967).

In response to these assigned tasks, new trends and methods are merging in correctional programs and the one of primary importance at this time is adult basic education in corrections.

There are many philosophies concerning correctional programs in institutions and basically they are becoming the same nationwide. The Alaska Division of Corrections (1971) has tentatively set forth philosophies and goals of the system and one statement that would be relevant in this case: "Everyone has a right to obtain an education as needed."

As stated before, education in correctional institutions has ranged from a vacuum to archaic methods, and many other problems are inherent, especially in a setting of this type. In many instances, the right to an education had to be earned by the inmate. He was expected to work a full eight hours a day and if he wanted to become involved with education he could attend classes during the evening hours. Furthermore, he must be on his best behavior and whether he would be allowed to attend classes might depend upon his work performance.

Most education programs in institutions were patterned after obsolete methods that had proved to be ineffective everywhere. Books and

materials were usually obsolete, facilities inadequate and equipment in either poor condition or non-existant. Traditional classes and curriculum were implemented without any flexibility. In other words, an offender either accepted the class or the program on this basis or received nothing at all. Furthermore, this type of program treated persons in groups and not as individuals and the offender found himself facing the same problems that he previously experienced before his incarceration. Surveys indicate offenders are failure-oriented and to expect any success from an educational program of this type in a correctional institution is almost beyond question. He comes into the institution and faces the same educational programs that caused him to be a drop-out along with the fact that there are many other barriers he must encounter that are existent in most correctional institutions.

Even though correctional institutions attempted to break away from the traditional ways, they faced other problems. Lack of information concerning the offender has been a major flaw and it was impossible to diagnose, have any meaningful objectives, coordinate or evaluate any existing program. There is a need to know why the inmate is incarcerated. There is a need to know specifies concerning the offender. This problem was brought out in the final report of the Joint Commission on Correctional Manpower and Training (1969) and stated thusly:

> Much more is known today about the offender population and its aggregate form than in terms of specifies. The Joint Commission has found an appalling lack of systemized information on the characteristics of offenders. There is no simple way to sum up what is actually known about offenders as individuals (p. 55).

The need for specifies of individuals is further commented by Wells (1970), wherein, he quotes Conrad as saying,

> To define the offender's problem in terms of experience with similar offenders previously delt with is to arrive at some notions as to possible solutions. The shotgun sprayed at the whole offender group is replaced by a rifle aimed at a specific intended effect (p. 598).

This brings out the fact that a person cannot be treated in a group but must be treated as an individual. Furthermore, to make adult education valid, specifics must be known about the offender.

Unless these techniques are followed, the end result is a hit and miss program. It is similar to a quack doctor prescribing a different medicine each time a previous one fails to cure the patient. Correctional institutions have been following this procedure for years by prescribing programs for the offender that may not have any relevancy to his problem and the reason he is incarcerated.

Now to the theme of this paper which is Process Information. Preceding statements have indicated each offender is unique, an individual, and must be treated as such. He can no longer be treated in groups, and

institutions can no longer follow the hit and miss program hoping by mere chance they will punch the right button and he will walk out of the institution and abide by the rules of society. Without process information, correctional goals and objectives cannot be met.

To process information means to acquire, analyze and synthesize as much information as possible about the offender and his environment in order to identify deficiencies. It is further stated,

> There are two kinds of information about the offender: (1) information about educationally and socially deprived offenders in general; and (2) information about the individual learner in a specific situation (Ryan, Clark, Hatrak, Hinders, Keeney, Oresic, Sessions, and Streed, 1970).

Information in general concerns his characteristics and behavior in society. According to Ryan, et al. (1970) "Characteristics which are typical of the offender in relation to him becoming a fully functioning person . . . (are) economic efficiency, self-realization, civic responsibility, and social relations." These characteristics range from unemployed, under-employed, for any number of reasons, to a person with lack of discipline, resents authority, failure-prone, one who feels no civic responsibility, and a person who has experienced unhappy family relations compounded by poor relationships with other groups in society.

Specific information regarding offenders is derived from two sources: (1) External, and (2) Internal (Ryan, et al., 1970). Specific information from external sources includes the entire spectrum of his life and relationships outside the institution, and would include, but not in its entirety, his educational background, marital status, occupation, all records of military service and other agencies.

Specific information from internal sources would include any activity within the institution. From the day an offender is committed to an institution he becomes a matter of record, and his life becomes almost a daily log. Interviews, medical problems, tests, and reports of any type are sources of specific internal information.

Previously the majority of information sources have been utilized by many institutions, but one area of needed information has been neglected to some extent; namely, the obtaining of cultural, social, economic and values information regarding the offender. This type of information has been somewhat neglected in the past, but due to current day trends has now become of great importance.

Societal information is necessary since the majority of offenders will return to the community from whence they were ejected. Correctional institutions also have social systems and the individual must be in this frame of reference to assist in a true diagnoses of his problems. The social system of the correctional institutions and of the free world are different in many respects, but one must still understand why the offender did not adapt to the social system from whence he was ejected, and also

observe how he fits into the social system of the institution.

With attention drawn to minority groups, the need for cultural information regarding the offender is becoming very necessary. Adult basic education programs in institutions are completely different and not compatible with minority groups. This fact has become apparent by many riots experienced in the prisons during the past few months. As stated by Nickel (1970): "If adult education does not take into consideration the offenders culture, the teaching program will become totally ineffective." The offender could return to a society which is totally different from anything the institution had to offer. An example: in an Alaskan institution a Native from a small village is incarcerated. The correctional system and specifically the adult education program is based upon the metropolitan society and usually does not take into consideration any culture or social aspects of the brush country. Without the instructor understanding the agriculturation problems facing the offender, adult education is of no value to the Alaskan Native.

Along with cultural differences, values of the offender must be obtained. In a materialistic society, certain values are placed on ownership of property, vehicles, or personal belongings. Others place high priority values on occupational skills, status in the community, or possibly service to others. Offenders in an institution place high value on cigarettes, candy, gum, and other such items. Monetary wealth is valued by many. Again using the Alaskan Native as an example; indications reflect his values are quite different in many respects. Problems are experienced in institutions concerning the Alaskan Native since they would readily possess materials of various source without regard to ownership. According to their customs, any item another person was not using or had as surplus to his needs, is fair game for anyone in need. Their values are centered more around the home and family life with food and shelter their primary concern.

One goal of correctional institutions is to return the offender to the community as a tax paying citizen. In this light the economic factors concerning the offender and his environment must be obtained and considered. Several factors must be studied in this area. The skills or the potential ability to develop skills needs be considered, as does area or the community with potential jobs. Additionally, the vocational training programs available in the institution itself must be considered.

Unfortunately, institutions in the past have placed emphasis on keeping the offender busy in a maintenance or mandatory occupation and neglected the fact that training or skills in this area will be of no benefit upon his return to society. The classic example has been mentioned many times; the license plate industry which is primarily handled nationwide by correctional institutions. The job market for those trained in this occupation is non-existent on the outside. There are many other industries or trades in institutions similar to the license plate industry, and unfortunately, the offender and his skills are utilized to actually maintain a correctional institution or its programs without any regard to his eventual release into the community.

Many institutions do not have vocational training necessary for the inmates in a specific situation and therefore, alternative plans must be developed. The Alaska Division of Corrections has expressed the philosophy that institutions will not develop or duplicate sophisticated vocational training programs available in the community, but the goal will be to have the offender attend training programs in the community.

Constant job surveys and analysis of the economic factors of a community must be kept current and available to the institutional personnel at all times. New industries building in a community, present industries and businesses currently operating, and any depletion of the aforementioned must be kept under consideration.

The preceding has only been a brief outline of certain types of information obtained about an offender. It boils down to the point that any and all information since the day of his birth until the present is necessary since all factors obtained must be analyzed and then synthesized to develop a program for the individual.

In processing information, analysis is probably the most important function. Without analysis, information received is of no value. There would be no value in holding interviews with the offender, or keeping any reports or records on his behavior, either in or out of the institution. Without proper analysis, information cannot be synthesized, which is the ultimate goal in processing information.

The obtaining of all information available is a necessity for a true analysis. Each spice added to a pot of stew will change the overall flavor. Each color added to a can of paint will change the overall tones of color. Each piece of information about the offender will necessitate alternatives or add various dimensions to the synthesis of information. One piece of information may change the whole program development for the offender. The information which is gathered, studied, analyzed and synthesized provides a basis for defining the project plan and establishing an institutional and educational philosophy (Ryan, et al., 1970).

Motivation of the offender is a key factor in whether any project plan developed will be successful or not. In this day and age, adult basic education is necessary for all persons from all walks of life. Learning must be on a continual basis. This philosophy could be summed up in a statement by Don Hugh Scott, President of Communications and Education for Industry, in an interview wherein he stated; "It isn't how much you know. Learning is lighting a lamp, not just filling a bucket (Zich, 1972)."

References

Alaska Division of Corrections. Philosophies and goals of the Alaska division of corrections. Unpublished paper, Alaska Division of Corrections, Juneau, Alaska, 1971.

Joint Commission on Correctional Manpower and Training. A time to act. Washington: U. S. Government Printing Office, 1969.

Knowles, M. S. Modern practice of adult education: Andragogy vs pedagogy. New York: Association Press, 1970.

Nickel, C. F. Problems related to ethnic differences among learners. In T. A. Ryan (Ed.), Collection of papers prepared for the 1970 national seminars. Honolulu: Education Research and Development Center, University of Hawaii, 1970.

President's Commission on Law Enforcement and the Administration of Justice. Task force report: Corrections. Washington: U. S. Government Printing Office, 1967.

Ryan, T. A., Clark, D. W., Hatrak, R. S., Hinders, D., Keeney, J. C. V., Oresic, J., Orrell, J. B., Sessions, A. R., & Streed, J. L. Model of adult basic education in corrections (Experimental ed.). Honolulu: Education Research and Development Center, University of Hawaii, 1970.

Wells, H. G. Individual differences among offenders. In T. A. Ryan (Ed.), Collection of papers prepared for the 1970 national seminars. Honolulu: Education Research and Development Center, University of Hawaii, 1970.

Zich, A. Management training with a twist. New York: Signature, 1972.

LEARNER INFORMATION

Alfons F. Maresh
Minnesota State Department of Corrections
St. Paul, Minnesota

The more concretely an individual can identify his aspirations and assess his present level of competencies in relation to them, the more exactly he can define his educational needs, the more intensely will he be motivated to learn.

The crucial element in the art of adult education is skill and sensitivity in helping the offender to assess his needs, and stimulate the transition of these needs into interests so that he may become a fully functioning person, capable of achieving economic efficiency, self-realization, civic responsibility and positive social relationships.

How does one get the information necessary to make a needs analysis? Institution educators collect considerable information about the offenders they serve. Much of this information is important in offender placement decisions, and as a measure of progress and level or present functioning within the academic and social programs. Objective data is routinely collected and recorded and for the most part, is readily available for use by decision-makers. Other information, of a more subjective nature is usually recorded in anecdotal form or included in summary reports and is not readily available. A comprehensive assessment of needs involves the systematic documentation, collection, and tabulation of such information across the total inmate population served. Such procedures are essential in any careful examination of a program. They are all the more important in the identification of those offenders in any institution who are making less than satisfactory progress when compared with counterparts in the general population of the socially and educationally disadvantaged in the community. Because of their alienated status, the offenders particularly need help for re-entry into the outside community.

A program of education can be viewed as consisting of inputs, processes, and finally outputs. Inputs include all the ingredients of a program over which educators may or may not exercise control, those being:

1. Clients

2. Materials, supplies, methods, personnel, supportive services

3. Equipment, buildings, physical arrangements

Process refers to the actual program activities or the particular education "mix" of available inputs. This mix may emphasize one or more "program techniques." It is within this aspect of education we often become over-involved in process to the extent that we lose sight of our purposes.

The third aspect of an education program involves output. Output represents statements of minimum expectation for our clients' level of functioning when they leave the program. It involves questions relating to what clients should be like upon return to the community. Output objectives, stated in measurable terms are essential for accountability purposes.

The continuing information gathering process should include program and individual needs for analysis. Then the major thrust can zero in on behavioral changes in terms of:

- identification of the change needed
- prescription and provision of a program to achieve such change
- measurement of progress in relation to goals
- taking appropriate action when change goals are achieved.

After considerable study and planning, the Minnesota Department of Corrections is both committed and anxious to move into the "CONTRACT PROGRAMMING SYSTEM" in each of the Division of Adult Corrections institutions. This means that each offender's period of incarceration will be determined (within limitations of sentence) by how long it takes him to achieve certain specified goals. These goals will be behavior changes needed before release. Changes will be expressed in the form of measurable performance objectives. The essential performance objectives will then be incorporated in a contractual agreement between the inmate, the institution, and the releasing authority. The inmate will agree to work toward the objectives. The institution will agree to release when the objectives have been achieved.

Obviously this will not be easy to do. The system will depend upon our competence at identifying the needed behavior changes, at formulating proper performance objectives, and our resourcefulness in providing the program means for the inmate to accomplish his objectives.

AN INFORMATION RETRIEVAL SYSTEM FOR CONTINUAL EVALUATION OF ADULT BASIC EDUCATION PROGRAMS

Dale W. Clark
Federal Youth Center
Englewood, Colorado

Introduction

A major need for effective measurement and evaluation, if it is to serve its purpose of improving programs to better meet learner needs, is that it be continuous. "The most effective evaluation is more than pre-test-posttest measurement. It is continuous, carried out in relation to specific and immediate as well as long range purposes, and provides feedback during the entire program (Ryan, 1971, p. 9)." This is especially true in correctional education setting where there is a continual turnover of students and change in student characteristics. Annual or bi-annual evaluations, as commonly practiced, result in programs not meeting student needs much of the time between evaluations and resulting program changes.

The main reason evaluation is not continuous in many cases is that needed information is not continuously current and easily retrievable. Compiling data from ordinary records such as student and office files is so time consuming that schools are many times hard put to do it even once each year. This situation, plus that of offerings becoming obsolete, led the Federal Youth Center to search for an inexpensive system to solve these problems and make continuous evaluation possible. A description of the resulting system adopted and some of the background information is presented here with the hope that it may be of aid to others with similar problems.

The Need

The need for continuous evaluation at the Federal Youth Center became quite apparent when staff began discovering students in the population without appropriate school programs to meet their needs, and residents in the population for whom meaningful programs existed but who were not involved. Lack of readily available and retrievable information was concluded to be a major cause. The information was on record but an estimated 160 man hours was needed to locate and compile it so an evaluation could be made to solve the problem. This was done the hard way because at that time the Information Retrieval System was not available.

Deciding What Was Needed

School staff members then went about the task of preparing the objectives of the information system needed. Conclusions reached were that

the systems should:

(1) store as much information as possible to meet evaluation and student programming needs,

(2) yield information quickly, easily, and accurately,

(3) be such that information could be updated daily,

(4) store the information indefinitely,

(5) yield cross correlations in one operation,

(6) be capable of receiving and storing information on each resident,

(7) be capable of immediately yielding information on one item or any number of items,

(8) be inexpensive.

The above criteria indicated the need for an electronic computer but criterion number eight precluded that alternative. Staff, however, had some experience with a system that has relatively simple computer potential but is a manual operation--a "needle-sort" system. Information was obtained from a known distributor (Professional Aids Co.) of such a system which eventually was accepted as meeting all criteria.

The Information Retrieval System

The system selected was the Information Retrieval System distributed by Professional Aids Company. It consists of cards available in various sizes with numbered holes for notching around the outer edges, sorting rods, and a hand notching punch. Also available are a cabinet, a machine notcher, an electric sorter, and special printing on the cards. The basic unit, including 1,200 cards, cabinet, notcher, and instruction, costs about $70. Other systems using the same basic principle are available. Some schools use them for sorting report cards and retrieving and storing student guidance and scheduling information. Industrial firms, medical facilities, and research operations use them quite extensively where cross correlation of data and subsequent retrieval is required.

The system allows one to perform an amazing variety of "finding" tasks with remarkable flexibility. Complete data on any category or only those items that fit more than one category can be retrieved, by simply inserting a sorting rod, or rods, through coded numbered holes around the edge of the card. When the sorting rod is lifted, the desired cards which have been hand notched will fall out. The outstanding advantage is that the information on them can be "filed" in hundreds of different categories at one time by careful coding and punching of the holes around the edge of the card. Systematic filing by subject or alphabetically is not

needed since any card or cards can be found just as quickly by sorting with the needles. (The sorting rods are very similar to knitting needles.) The cards can be ordered either blank or with printed formats. Some users print their own formats on the blank cards with ordinary duplicating equipment. It is fast, simple to use, accurate, takes little space, is inexpensive, and up to 5,000 items of data can be included.

Setting Up a System

The primary concern in setting up the system is to decide what information is needed for desired measurements and evaluations. The starting place is with the organization's educational and operating objectives which should be stated in measurable terms.

> Evaluation is the process by which measurement data are compared to a standard implicit in the stated goals and objectives. Results of these comparisons are used to place a value on the progress of the individual, and to determine the effectiveness of the program. A thorough understanding of the relationship between program behavioral objectives, program planning, implementation of the program, and program measurement is essential for program evaluation (Ryan, Clark, Hatrak, Hinders, Keeney, Oresic, Orrell, Sessions, & Streed, 1970).

This concept is stressed by other recent works on the subject of evaluation (Hitt and Agostino, 1968; Knowles, 1970; Michael and Metfessel, 1967):

1. State the broad goals of the educational program.

2. Develop specific operational objectives.

3. Translate specific operational objectives into instructional strategies to facilitate classroom learning.

4. Select and develop instruments to allow judgments concerning the extent the operationally stated objectives have been attained.

5. Administer instruments periodically to establish normative data.

6. Determine behavioral changes by:
   a. comparing individuals or groups to normative data,
   b. determining individual or group change relative to earlier administration of the same or comparable form of instrument, and finding intercorrelations among various measures that suggest patterns of interrelationships.

7. Interpret behavioral change relative to both specific behaviorally stated objectives and broad goals.

8. Combine group gain and accounting data to provide cost-benefit analysis.

9. Recommend further implementation and/or modification of objectives.

Most evaluative information needed should have been identified if the plan includes all the steps above. Another consideration, however, that may or may not be included in the above, is evaluative information required by other levels of administration of the educational programs such as higher supervisory levels, central offices, and governmental agencies funding programs.

Another consideration in determining information needed is the quasi-evaluative one of programming students. If the system has the capacity, information on student characteristics and progress is very helpful in placing students in classes. For example, if each student in need of Driver Education has this information notched into his card, and his completion of the course is also notched, then identification of all those still in need of the course can be made in two simple sorts. The needle is first put through the hole for the need and all these cards drop out. If those who have completed are then sorted from these, one then has remaining those in need who haven't completed the course. Student programming then becomes very efficient and expeditious if this is done for all major programs. Of course both the need and completion data are valuable for program evaluation as well as for the programming process.

Student characteristics such as age, achievement level, and intelligence quotient can also be punched in for use in efficient programming and in preparing demographic reports as well as for periodic evaluation to see if programs are still appropriate for students having these characteristics.

One other consideration is existing evaluation data systems. Some schools may already have a system that is just as efficient for some data or have a system imposed on them that can not be shed for good reason. There is no need in these cases to duplicate the data unless it is not readily retrievable or current. If the latter is true, it may be well to duplicate for efficiency.

Preparing a number code to follow in notching the cards is the next step. This is not difficult with the instructions accompanying the set as a guide. A copy of the code prepared for the Englewood Federal Youth Center can be found in the pages following the text of this paper. It is self-explanatory except for a few items. The "t" and "b" indicate top and bottom holes of the card in use which has a double row of holes around the edge (which increases the number of items that can be punched). It may be noted that first letters of last names have been punched in for retrieval of individual student cards which is needed when keeping cards

up to date each day. Code 87 b was set up to avoid confusion with Code 86 t.

The Federal Youth Center System

The needle-sort system set up at the Englewood Federal Youth Center has essentially been described already. The process described were used in identifying the desired information for coding. Additional operational information may be of help in understanding the application of this specific system. At this point, reference is made again to the Code for Needle-Sort Information Retrieval System (in the pages following the text of this paper) which provides the best overall concept of the potential functions.

The school Counselor-Programmer has the responsibility of keeping the data current and is the main day-to-day user because of responsibility for assigning students to courses, keeping up with and reporting their progress, and maintaining the programming at optimum effectiveness. The Counselor keeps the cards current by punching in new information daily. The Counselor is also responsible for initial interviews and goal determination of students as well as their testing, so much of the information is punched in during the initial classification period. Very little time is involved if it is done daily as the information is on hand.

It may be noted that much of the information coded concerns programming of students. This is because of the open-end scheduling and individualized instructional methods where constant evaluation is a necessity. Keeping track of students is a major problem so they aren't "lost" if one does not have a system such as this. Reference is made to the Operations Description in the pages following the text of this paper for further clarification.

A comprehensive personnel file on each student is also maintained at the Federal Youth Center for adequate individual student progress evaluation and records purposes. This results in some duplication of work. One way to simplify this is to adopt a notched card that is large enough to maintain all essential student information. This may be feasible in adult institutions where the information to be recorded is not expensive.

Ordering cards with more holes than planned information is recommended to permit adding to the evaluation system. The card used at the Federal Youth Center has a double row of 110 holes and only 87 of these are now coded.

Conclusion

An inexpensive information retrieval system, suggestions for setting one up, and description of a particular system has been presented with the hope that the ideas will contribute to more effective and continuous

evaluation of adult basic education in corrections programs.

References

Hitt, W. D., & Agostino, N. R. The development of a model education and training system for inmates in federal correctional institutions. Report presented to the Federal Prison Industries, Battelle Memorial Institute, Columbus, Ohio, April 1968.

Knowles, M. S. Modern practice of adult education. New York: Association Press, 1970.

Michael, W. B., & Metfessel, N. S. A paradigm for developing valid measurable objectives in the evaluation of educational programs in colleges and universities. Educational and Psychological Measurement, 1967, pp. 27; 373-383.

Ryan, T. A. Strategies for evaluating adult basic education in corrections. Paper prepared for Regional Training Seminar on Adult Basic Education in Corrections, Norman, Oklahoma, March 16, 1971.

Ryan, T. A., Clark, D. W., Hatrak, R. S., Hinders, D., Keeney, J. C. V., Oresic, J., Orrell, J. B., Sessions, A. R., & Streed, J. L. Model of adult basic education in corrections (Experimental ed.). Honolulu: Education Research and Development Center, University of Hawaii, 1970.

Code for Needle-Sort Information Retrieval System

Name only on card.

Needle Card System:

1-26	A-Z	first letter of last name
27 t & b	15-16	years old at enrollment
28 t & b	17-18	years old at enrollment
29 t & b	19-20	years old at enrollment
30 t & b	21-22	years old at enrollment
31 t & b	23-24	years old at enrollment
32		California Achievement Test up to 6.5 (Battery Median)
33		California Achievement Test 6.6 - 9.0
34		California Achievement Test 9.1 and up
35		California Achievement Test not given
36		Beta up to 90
37		Beta up to 91-110
38		Beta 111 and up
39		Beta not administered
40		General Aptitude Test Battery administered
41		General Aptitude Test Battery not administered
42 t		Need to take GED test - no school
42 b		Fulfilled requirement of taking GED test
43 t		Passed GED test (any time previous)
43 b		Passed GED test while at FYC
44 t		Received High School diploma prior to enrollment
44 b		Received High School diploma while at FYC
45		Enrolled in OJT Kitchen
46 t		Dropped OJT Kitchen
46 b		Completed OJT Kitchen
47		Increased CAT battery median less than 5/10ths
48		Increased CAT battery median more than 5/10ths
49 t		Below 4.0 battery median
49 b		4.1-5.0 battery median
50 t		5.1-6.0 battery median
50 b		6.1-7.0 battery median
51 t		7.1-8.0 battery median
51 b		8.1-9.0 battery median
52 t		9.1-10.0 battery median
52 b		10.1-11.0 battery median
53 t		11.1-12.0 battery median
53 b		12.1-13.0 battery median
54 t		13.1-14.0 battery median
54 b		14.1-15.0 battery median
55 t		15.1-16.0 battery median
56 t		Need Driver Education
56 b		Completed Driver Education
57 t		Need PREP
57 b		Completed PREP

58	t	Need Vocational Orientation
58	b	Completed Vocational Orientating
59	t	Need Small Engine Repair
59	b	Enroll in Small Engine Repair
60	t	Drop Small Engine Repair
60	b	Completed Small Engine Repair
61	t	Need Welding
61	b	Enroll in Welding
62	t	Drop Welding
62	b	Complete Welding
63	t	Need Auto Mechanics
63	b	Enroll in Auto Mechanics
64	t	Drop Auto Mechanics
64	b	Complete Auto Mechanics
65	t	Need Auto Body Repair
65	b	Enroll in Auto Body Repair
66	t	Drop Auto Body Repair
66	b	Complete Auto Body Repair
67	t	Need Woodworking
67	b	Enroll in Woodworking
68	t	Drop Woodworking
68	b	Complete Woodworking
69	t	Need Vocational Business
69	b	Enroll in Vocational Business
70	t	Drop Vocational Business
70	b	Complete Vocational Business
71	t	Possibly qualify for Newgate Project
71	b	Qualify for Newgate Project
72	t	Enroll in Newgate Project
73	t	Drop Newgate Project
73	b	Complete Newgate Project
74	t	Need and goal Basic Education
74	b	Need and goal Intermediate (9th grade functioning level)
75	t	Need and goal GED
76	t	Need and goal High School Credits
76	b	Need and goal High School Diploma
77	t	Enrolled in Basic Education
78	t	Drop from school in Basic Education
78	b	Completed Basic Education
79	t	Enroll in Intermediate
80	t	Drop Intermediate
80	b	Complete Intermediate
81	t	Enroll in GED
82	t	Drop GED
82	b	Complete GED
83	b	Then pass GED test
83	t	Then fail GED test
84	t	Enroll in High School Program
85	t	Drop High School Program
85	b	Complete for diploma
86	t	Program from school does not agree with Classification & Parole Program

87 b

Program from school does agree with Classification & Parole Program

Reasons for dropping VT or school or Prep or Newgate or Driver Education

1. Caseworker's request
2. Teacher's request
3. Released from Center
4. Other - see jacket

Specific Objectives in Measurable Terms

Residents committed to the Englewood Federal Youth Center should be programmed for and achieve one or more of the following objectives as programmed by the Unit Committees and the Education Department:

1. A minimum educational functioning level of sixth grade as measured by the C. A. T.

2. At least one entry-level job skill measured by successful completion of at least one vocational training course or, in the case of students with college level goals (Project Newgate), successful participation in this program and completion of a minimum of two years of college or technical training in the Center and in the community after release. (Newgate students are also encouraged to also complete as much vocational training in the institution as time permits so they will have a better means of supporting themselves while in college.)

3. Attain either (a) high school diploma, (b) high school equivalency certificate by passing Colorado GED scores or (c) national norms on GED, (d) achieve an increase of two grades as measured by the C.A.T. if it is impossible to complete (a), (b), or (c) because of age and/or insufficient time in the Center. These three are listed in order of preference and value to the student.

4. Successfully complete a pre-release preparation course which includes social and career-development information and skills.

5. Successfully complete an occupational orientation course and receive occupational guidance before assignment to vocational training or Project Newgate.

6. Successfully participate in physical education and Arts and Crafts if in need of improved gross motor coordination to achieve academic skills (special education students) or to successfully participate in recreational and/or sports activities.

7. Participate in recreation program activities and hobby shop activities to improve interest and skills for constructive use of leisure time in the Center and after release.

8. Successfully complete a course in Driver Education unless completed prior to arrival.

Operations Description

The Education Department at the Englewood Federal Youth Center operates to meet the educational, vocational, and recreational needs of a Federal Youth Center population of about 330 residents who vary in age from 14 to 22 and vary in functioning level from the illiterate through post high school. A majority of the students are dropouts from public school where they encountered difficulties before being committed to the Center. They are nearly all of normal and above intelligence but are underachievers functioning at about 6 percent below 5.0 grade level and 58 percent do not have vocational skills and over half report no work experience. Other needs vary from 86 to 97 percent of the residents in the areas of aspirations, standards and values, interpersonal relationships, self-control, family conditions, economic status, and health. About 15 percent have completed high school upon arrival. Residents are from all states of the West and some from Central states. The racial distribution is approximated, 61 percent white, 30 percent red, 11 percent black. The large percentage of American Indians is because all offenses on Indian reservations are Federal offenses.

All residents are diagnosed regarding needs when they enter the Center and program goals are jointly determined by the education department and the Unit Teams including caseworkers, counselors and other Center representatives. Most youth have indeterminate sentences dependent upon goal completion before release to parole and community supervision. The entire treatment program for each resident is managed overall by an assigned caseworker from the Classification and Parole Department and the Unit Teams.

School and vocational training programs operate continuously every "workday" of the year with no semesters or "school years" except for the college program. Scheduling is open-ended with students entering and leaving classes daily as needed and as they complete their course objectives. Classes are relatively small with an attempt to keep the instructor-pupil ratio below one to twelve because of student characteristics and the individualized instruction approach. The twelve or so students in the group with the instructor at any one time will usually be working in a number of different courses and on different units of each course. Both supportive (academic) education and vocational training operate on two half-day schedules so most students spend a half day in each. If they complete one goal before the other they are usually assigned to a work experience in institutional maintenance. An exception is the college level program which is scheduled on a full-day basis.

Education department activities are only a part of the total Center treatment function and all operations must be coordinated closely with other departments such as casework, medical, religious, custodial, food service, mechanical, administrative, business, and personnel.

HUMAN CONCERN FOR THE OFFENDER

Walter J. Grenier
Illinois Department of Corrections
Lockport, Illinois

Affective Aspects of Offender Behavior

Many criminological studies have uncritically accepted the prison inmate as a fair representation of who is the criminal. This undifferentiation sampling which has been used in some classical studies may possibly account for the little information we have about the offender and his behavior. However, it is not at all certain that an examination of large numbers of prisoners will really tell much more than their particular location at a certain time.

In the January 3, 1972 issue of Time magazine, three horrifying pictures of unbelievable criminality showed the final agonizing moments of a bayonetted Bangladesh captive, a small boy being stomped to death, and two men pitifully pleading for their lives as thousands of spectators cheered. Assuredly, the perpetrators of these crimes regarded themselves as heroes of the New Republic. But to American viewers thousands of miles away, governed by values of an entirely different kind, these killers would be proper candidates for death row. Geographical location, current events, and cultural differences, allow people to hold varying values.

At a different time in history, courts are on record as having sometimes sentenced children to the gallows, the church of having ordered dissident people burned at the stake, and governments of having sanctioned killings for infractions of social etiquette. At different times and at different places human behavior has been variously measured. The law which defines criminality has too often been conceived and fortuitously interpreted on what appears to be incomplete thought of societal needs.

The considerable task of identifying the offender and the nature of his behavior here in America, in the year 1972, should first recognize that the "average" prisoner is a ghettoed black man who has been sentenced for a wide range of crimes against a repressive white society for which he feels little sense of responsibility. Spurred by social, educational and economic deprivations, the black man's antisocial behavior accounts for a disproportionate amount of crime statistics in the nation. At present, most of the heavily populated states have prisons which statistically report from 60 to 80 percent minority race inmate populations. But change is taking place, for in the last few years minority groups in the United States have made significant political, educational, social, and economic gains in their drive to achieve equal civil rights. These gains should begin to reflect themselves in dramatically reduced black crime figures with subsequent changes in the composition of prison populations. Even now the rapidly changing texture of prison inmate populations

has deeply affected the statistical description of who is the offender and what is his mode of behavior.

There appears to be, however, in most correctional facilities a small, hard core group of prisoners who are distinguished not so much by their race, their crime, their age, their geographical location, or their ability to adjust to prison life, but by their resolute addiction to crime and their isolation from other human beings. Often labeled psychopath or sociopath, these offenders appear to have pronounced etiological similarities which are, perhaps, most characteristic of the offender as he would appear in most cultures and periods in history and as he is popularly known.

The differentiated "real" offender, the hard core 10 to 15 percent of the prison population, started out in life, as shown by juvenile court records, as an abandoned, neglected, or unwanted youngster. Following a series of inadequate foster hom or institutional placements, he gained the attention of the school authorities by his truancy and inability to learn or adjust. At the mean age of 13.5 years, he became a ward of the Court and remained on probation until the mean age of 15.4 years at which time he was committed to a state training school. Upon his release from the state training school, about one year later, he comes to the attention of the adult authorities for ever increasingly serious crimes. For the purposes of this paper, it is this kind of offender to which reference is made.

A study made at the Fels Institute on parent-child relationships provides important information on what is often the future offender's beginning. According to the Fels report,

> Where parents attitudes are classed as "actively rejectant" the children show a slightly decelerated intellectual development, relatively poor use of the abilities they do possess, and some lack of originality. They are emotionally unstable, rebellious, aggressive, and quarrelsome.

One can surmise that the parentally rejected youngster does nothing to endear himself to the school authorities who, also, end up rejecting the child. The disabling experience of not being wanted at home and in the classroom cannot help but produce in the child a sense of worthlessness and a negative self-concept. In order to protect himself from the pain of this reality, the youngster runs away and/or isolates himself from others. This escape is perhaps the start of a cycle which does much to produce criminality. Since nothing resembling a developed human can come about in isolation from other humans, the unhappy result is a disorganized, undeveloped, emotionally shallow, basically hostile person. Correctional personnel are sore pressed to establish any kind of minimal relationship with this kind of offender. Workers find that this offender can be strangely insensitive and frighteningly disorganized in his value systems.

Approaches for Achieving Human Concern for the Offender

Following the turn of the century reaction to overly severe sentencing of offenders, there emerged a humanistic movement within the judiciary system which seemed to be motivated by the maxim: "to understand all is to forgive everything." Depth studies of offenders by the emerging field of new social workers and Freudian-oriented psychologists produced reams of "understanding" of the offender's behavior in terms of his environment, needs and drives. But somehow this new awareness of background information did little to help the offender change his behavior or to help him avoid, eventually, the severe consequences of his repeated crimes. The problem, it would seem, was that court workers tried to change the offender's behavior by "understanding" and then prescribing solutions which, unfortunately, were only valid for the worker's system of values and to his perception of the world in which he lived--not to the offender's world. It is thought that this period of "understanding" encouraged a serious lapse in the criminal's recognition of his responsibility for his behavior; how could he be responsible when there were so many factors in his background which had contributed to his behavior.

Understanding the offender was generally used for the purpose of analyzing and prescribing. It is presupposed on the part of the worker that, as the wiser person, he would have answers to the offender's adjustment problems. But this posture upset the necessary equality between counselor and offender by implying that one was the repository of standards for behavior and the other was not. While this arrangement did wonders for the worker, it only widened the gap of the offender's responsibility for his behavior and reinforced his feeling of inadequacy.

Paradoxically, understanding by the correctional worker of the offender's communication is the very base for a therapeutic relationship. This is not the kind of understanding wherein the worker can inject his beliefs and values, but understanding of the sort which will enable the worker to experience, along with the offender, parts of the latter's private world. This is the kind of understanding which will enable the worker to "deeply know" and feel those things which the offender chooses to communicate.

Achieving human concern for the offender is achieving human concern for people. It probably begins from an understanding of oneself. Only when we are able to recognize our own uniqueness and worthiness are we able to offer others the dignity and respect so critical to interpersonal relationships. Concern for others is part of our heritage from the millions of years of man's existence as a social human being. Unless this social trait is seriously disturbed by early and consistent deprivations people will naturally take their place in society. The development of concerned correctional workers must recognize that concern is not acquired like a technique nor can it come about through "understanding" alone. Concern for others is, perhaps, the highest possible reflection of an individual's maturity which stems from his personal adjustment to life's experiences. It is an adjustment which allows the individual to be what he is in a genuine manner, to love himself and to love others.

Importance of Real Human Concern for the Offender

Removed from a free society because of his crime the offender is placed by the state in a controlled environment which is ostensibly to change his behavior. Where formerly prisons were intended to punish and condition the inmate to a new set of values, these facilities are beginning to see themselves more as short-term growth promoting opportunities. Because, as was suggested earlier, criminal behavior is the disorganized, hostile behavior of a person who has a negative self-concept, and a sense of personal worthlessness, then, offenders are entitled to ask the state which placed him in prison for growth promoting experiences which will return to him a sense of dignity and respect for himself so that he can rightfully take his place in society.

Regardless of the counselor's theoretical allegiance, whether it be Freudian, behaviorist, phenomenologist, existentialist, there is agreement, according to research by F. E. Fiedler, that it is relationships of an agreed upon and identifiable nature which help people to grow, or to change. It does not matter that the person be an offender or the president of a bank, he needs to meaningfully relate to others. Even seasoned counselors are aware of their own growth experiences which may occur from some of their happier counseling relationships. No one, it would seem, can deny the need of humans for sound interpersonal relationships.

But life styles are developed over the years and are not readily changed. When an offender is placed in even the best of prisons, the program can only begin to affect some positive movement in the direction of an improved self-concept. The change which comes from growth is a never ending process which needs to be reinforced and supported even after the offender's release from prison. Offenders who lack the facility to establish relationships and who have undergone damage from being locked up for long periods of time need highly skilled parole workers to help continue whatever positive change may have been initiated in prison.

It has long been known that the criminal justice system has often attracted job applicants who sought to satisfy personal needs which were not always in the interests of updated correctional goals. When prison programs lacked conceptualization, other than for custody, if didn't much matter why applicants sought employment in correctional systems as long as they were willing to obey orders and function impersonally. But times have changed and program objectives in corrections now require of employees that they become involved in organizational goalsetting, and that they recognize their job responsibility for participation in establishing a total climate which is growth promoting. Correctional workers at nearly all levels of administration and in all areas of a program are asked to provide offenders with a relationship which is now compatible with the stated program philosophy. In most states the implications for personnel selection have not yet been translated into department of personnel job descriptions. Where once the emphasis was upon physical qualifications, new goals of updated correctional program require persons who are accepting, open-minded and sensitive to others.

The Need to Bring About Effective Change

On frequent occasions the news media, in its unceasing search for the sensational, will provide its audience with lurid accounts of prison riots, escapes, and killings. These reports, tragic though they may be, unerringly focus on peripheral events instead of the core of the problem in the prison system. A complacent and infrequently involved public, long accustomed to the belief of the value in the "vengeance of the law" has remained unmoved by news accounts of prison failure because seemingly, these events only affected criminals. The underlying thought appears to be that prisoners really deserve the worst; "they have it coming."

Short-sighted or uninformed correctional officials, often more intent on preserving their domain than advancing their prison programs, have, in many instances, unwisely defused important issue so that the press failed to communicate these issues to the public in such a manner as to bring about better public understanding and long overdue change.

It is probably a fair statement that prisons are as they are because an uninformed public continues to tolerate them. Legally protected by an encrusted judiciary, vested interests find it relatively easy to avoid making changes by pointing to the complexity of programs through a smoke screen of learned rhetoric. There is, fortunately, some evidence that the press in recent months is beginning to penetrate one of society's least effective institutions--the prison system.

The very structure and tradition of prisons have insured their static and little known condition. Under the pretext of "security requirements" administrators have established and maintained an autocratic, militaristic, suppressive style of management which stiffled any real communication with the outside world. Under these conditions the Warden, rigidly isolated from any feedback within his own organization, is actually the only person who customarily communicates with the outside, and with all the limitations and biases of his office. But an improved and pervasive reporting of prison failures can't be denied forever. In spite of the means of control available to most correctional administrators, many of these controls are becoming less effective as our present day culture becomes impatient with arrogance and unilateral decision-making.

It is not likely that the public, when fully alerted by the press, will long endure a nation-wide correctional system which costs in excess of 4 billion dollars each year, and which was described in the Congressional Record (Congressional Record Vol. 114, No. 137) as a "correctional system that does not correct," nor a juvenile system commented on by Milton Lueger, former Director of New York State Division for Youth, in a statement to the United States Sub-committee to Investigate Juvenile Delinquency, "with the exception of a relatively few youths, it is probably better for all concerned if young delinquents were not detected, apprehended or institutionalized. Too many of them get worse in our care."

Weekly newspaper accounts of escapes and abortive prison uprising in Illinois, New York, Arkansa, California, New Jersey, Maryland,

Pennsylvania, Washington, Florida, and Iowa confirm the failure of the field of corrections by uncovering the usual, now well-known, sub-human conditions, reflections of 19th century penological beliefs, against which prisoners are sometimes prepared to die rather than to continue to submit or further endure. Pessimistically, it is presumed that prisons in other less developed state systems will be heard from when the traditional, heavy handed, presently employed controls are lightened by more progressive new administrators who replace old liners.

It is the legitimate responsibility of the press to inform the public that prisons not only fail in their purpose, destroy nearly any vestige of inmate integrity and seriously drain the financial resources of the state, but they also wreak considerable damage on the thousands of correctional employees and their families who attempt to operate so-called rehabilitative programs which are so inconsistent and fundamentally unsound.

The dangerously low morale of correctional workers, fed by unceasing evidence of failure, low pay, lack of prestige, physical danger, absence of planning and updated management, has unquestionably affected the worker, his family, and the community in which he lives. The impact on prison inmates guarded by dispirited and disgruntled employees has been considerable. The public must be aware that the documented climate in prisons is one of indifference, despair, fear and distrust and they are not noticeably improving.

When prisons were first conceived it was their stated purpose (1) to protect society by banishing the offender from the community, and (2) to punish the offender so that he would never again behave in such a manner as to suffer the punishment of incarceration. But with the experience of nearly 200 years of prisons and their inmates, it has been repeatedly recognized that the system only banishes the criminal for a relatively short period, and, usually, the criminal's unacceptable behavior has become even worse than before he entered prison. Although there is more than 100 years of incontrovertible evidence of prison failure, officials have not been moved to set new goals, only to mask the old goals with banalities. The present absence of a clearly defined direction in the field of corrections has an important corollary in denying the correctional field the kind of expert leadership necessary to the development of a very complex operation.

When the old prison goal of "punishment" and "banishment" was in vogue, the selection of administrators was a relatively simple matter. Criteria for the selection of wardens was usually on "toughness," "insensitivity," "cunning," "political power," and "military experience." However, in recent years, following World War II, the former clearly stated and widely accepted punitive correctional goal fell into disrepute, and although still in existence, it is not now publicly acknowledged. Consequently, selection of administrators has become a puzzling task since no new recognizable correctional goal has been advanced which would offer an alternative base for selecting personnel. Those in authority can only randomly speculate on personnel qualifications for correctional leaders.

The ensuing cycle of confusion which has resulted from the absence of a clear identifiable direction in the field of correction has often led to the appointment of leaders with a wide variety of backgrounds. Former distinguished leaders from other occupations have been fortuitously appointed. But uncertainty is not too surprising since those responsible for appointment were, themselves, unaccustomed to thinking in terms of unequivocal goals and objectives to be achieved.

In the probably less complex task, as compared to corrections, of putting a man on the surface of the moon, lunar project directors have wisely selected men with infinite care and insured their relevant training over years in those required skills needed to operate their lunar vehicle and attain a specific target. As astronaut's knowledge is exact to the demands which will be made upon him.

How entirely different it has been in the field of corrections. Only in the last two years has there been the beginning of some understanding about the need to have correctional administrators trained in the fundamentals of management practices if they were to be expected to direct their large, complex organizations. It is only in the last few years that correctional authorities have come to recognize the essential need for administrators who have been trained in the social sciences or "people changing processes," in group dynamics, in system approaches, in the use of computers, in organizational communications, and other related areas of knowledge. Whereas in former years it was sufficient to identify an applicant for a correctional position as a person "who likes people," experience has repeatedly demonstrated the need for additional, more sophisticated qualifications.

Summary and Conclusions

1. There is a need for a new and more careful identification of who is the offender. Much of the current statistical data is inaccurate and misleading.

2. Achieving human concern for the offender is not a matter of acquiring a technique or of understanding the offender's developmental history, but the life-long acquisition of a value system which will prize dignity and respect of human beings, which includes oneself.

3. Human beings, including offenders, require close association with others in order to develop. They need acceptance, genuineness, and interpersonal sensitivity in their relations with others. They need to have a positive self-concept and a sense of personal worth in order to function as a social human being.

4. Present prison systems, built upon essentially the reverse of what human development is all about, have a long and documented history of failure. There is an emergent need

to re-examine prison concepts and assumptions.

5. It is believed that modern technologies applied to present correctional systems would result in dramatic changes in existing programs. Modern management, a system approach, and computerized data collection would bring about the rapid collapse of corrections house of cards.

HUMAN CONCERN FOR THE OFFENDER

Sylvia G. McCollum
U. S. Bureau of Prisons
Washington, D. C.

Abstract

There is a general consensus that the present criminal justice system in the United States does not meet the human needs of offenders. Their needs are the same as those of all other human beings, intensified because so many who come in conflict with the law are system-penalized people from socio-economic, psychological and emotionally deprived backgrounds. Most institutions which comprise the criminal justice system do not, and it is highly questionable if they can as presently structured, provide the human services required by people in trouble with the law. In fact, many institutions and processes dangerously further the debilitation of the very people they are supposed to serve.

The offender client group has the potential to receive and accept help. Their level of readiness must be met by a corresponding level of readiness on the part of the criminal justice system. The present system must undergo significant and basic changes if it is to serve the human needs of the offender.

Introduction

> We the inmates of Folsom Prison have grown to recognize beyond the shadow of a doubt that because of our posture as prisoners and branded characters as alleged criminals, the administrators and prison employees no longer consider or respect us as human beings, but rather as domesticated animals selected to do their bidding in slave labor and furnished as a personal whipping dog for their sadistic, psychopathic hate (The Folsom Prisoners, 1970).

> When do we fail to try to rehabilitate? Because we deny our common humanity. We fear persons convicted of crimes. We want to punish, failing to see that punishment is in itself a crime, soon visited upon the public which causes or condones its usage (Clark, 1971, p. B-3).

> All they say, again and again, is we are human beings, not animals (Newsfield, 1972, p. 9).

> The century-old D. C. Jail is a "filthy example of man's inhumanity to man" and its administrators are guildy of countenancing a "mindless process which dehumanizes its victims,"

according to a report issued yesterday by the American Civil Liberties Union (Washington Post, January 28, 1972, p. B1).

In the end, these writers are saying the same things that were shouted from the walls of Attica. Ramon M. Shryock, B-28722, put it this way, "All we ask is to be treated like human beings which we are" (Roberts, February 6, 1972, p.5).

These quotations were selected almost at random over a one-year period. They were made by significantly different kinds of people - prisoners themselves, a former Attorney General and spokesman for a civil liberties organization. It would not be difficult to quote literally a hundred more similar statements made by other prisoners, public officials and a wide variety of private individuals and organizations.

One unifying theme runs through all the quotations regardless of their origin. Pleas from prisoners for recognition of their human rights and admission by governmental and private groups alike that these human rights are being violated. Study group after study group, scholar and casual observer, prisoner and keeper, all agree, with minor exceptions, that almost every person caught up in the American criminal justice system becomes part of a dehumanizing chain of events which molds delinquent and neglected children into bitter, destructively aggressive and desperate adults. And this, ironically, in a system which allegedly has as one of its primary goals, assisting the individual acquire more positive life styles.

There is a good deal of confusion about the purposes of effective criminal justice procedures. Even where consensus seems to exist regarding goals and purposes, there is little agreement on how to reach them. Clichés, prejudices, emotions, and a multitude of other barriers intervene to prevent a rational approach to this major social issue. The greatest dilemma, perhaps, is presented by those who argue that punishment and its accompanying dehumanization is somehow rehabilitative; that brutality and deprivation is somehow redemptive and that isolation from the main stream of community life and forced participation in an alien subculture somehow prepares a prisoner for life in the real world.

Prisons and Meeting Human Needs - A Paradox

Let's begin our critical analysis of some of these paradoxes by an examination of the human needs of all people and, most particularly, those of the so-called "offender" population.

There are at least three dimensions to all aspects of human behavior, the socio-economic, the psychological and the physical. A series of government reports (President's Commission, 1966; U. S. Department of Health, Education, and Welfare, 1967; Draper Conference, 1967) provide important profile information about offenders and these three dimensions of human activities. The socio-economic status of the average

"offender" is very unstable. He tends to be rootless, single or involved in a loose marital relationship, with no significant residential or employment history. He is isolated from organizations and groups and generally has not learned work habits or how to obtain gratification from work.

Psychologically, he is a distant person who holds people at arms length. He is impulsive, overactive and has difficulty planning ahead or considering alternatives. While seemingly glib and "smooth," he is generally fearful and anxious; he habitually expects unreliability, unpredictability and undependability from those with whom he comes in contact. He employs coping mechanisms which consist mainly of lashing out in hostility or in attempting fairly obvious unsophisticated manipulation.

In addition, characteristically, people in trouble with law enforcement agencies have many medical problems ranging from such fairly minor items as lack of proper dentures and glasses to such major items as serious physical handicaps or disfigurements. Offenders tend to have problems with alcoholism and narcotic addiction and have poor personal health habits. But despite all these negative qualities, and despite the fact that he has less formal education than the average population, the average offender has "normal" intelligence.

Given this general picture, what do we do to correct or rehabilitate these fragile people? Even in the face of unspecified or vague goals how can we justify herding these kinds of people into crowded, dismal, unsanitary and poorly staffed facilities which, by no stretch of the imagination, can serve the socio-economic, psychological or physical needs we have just described? Isn't it predictable that protracted periods under these adverse conditions will make people more deprived and weaker in every aspect than they were when they were committed to prison?

Some take issue with the contention that positive socialization experiences can take place at all during imprisonment. Security requirements, sentencing inequities, parole procedures, staffing patterns, geographic locations of prisons and many other impediments strain the creative and effective scheduling of prison time. But even if we think positive behavior patterns cannot be developed in prison, certainly no one can deny that imprisonment need not be a degrading and dehumanizing experience which leaves a person in worse shape than when it began.

Isn't it possible to use the time and the very nature of the limited mobility of the participants to develop a readiness for more positive life styles? Existing correctional institutions are not going to be abandoned tomorrow morning and a half a million men and women turned out. We can do many things currently as we work toward developing new and effective alternatives to imprisonment. Certainly we can meet, almost immediately, what Maslow (1954) calls "lower" basic human needs. There should be no idealogical conflict over satisfying such basic human physiological needs as food, shelter, and safety. The "higher"

basic needs such as "belongingness and love" and "esteem and self-actualization," are, of course, more difficult to satisfy in a prison setting. But there is some evidence that correctional institutions are moving to meet even these needs. Encounter groups, sensitivity training involving both resident and staff member, shared educational classes open to resident and staff alike, opportunities for family visits and furloughs and a multitude of other improvements are far enough along to suggest that the trend is irreversible.

An additional important step, participation in administrative decision making, is also proliferating in a significant number of ways. The establishment of the National Prison Center at the University of Iowa is a particularly noteworthy event in upgrading national recognition of prisoners' rights and needs. But even as we move forward in extending these improvements, it is extremely important to keep in mind that meeting human needs in a prison setting is doing it the hard way. Institutionalization carries with it its own paralyzing side effects and jeopardizes both prisoner and keeper.

The Director of the Bureau of Prisons, Norman A. Carlson, put it vividly when he wrote:

> The deeper an offender becomes involved in correctional processes, and the longer he has to be locked up, however humanely, the greater the costs to society and the more difficult will be his successful reintegration into the community (Carlson, 1972, p. 12).

The preparation of a person to live and function in the open society can best be accomplished in an atmosphere of disciplined and structured freedom and activity.

Prisoners Share Our Basic Cognitive and Affective Capabilities

The findings of Sullivan (1967), Pownall (1969), and the U. S. Department of Labor (1971) all confirm what we had already learned from the singularly impressive training accomplishments during World War II. We know how to train people to perform even the most complex skills within reasonably short time periods. It is not an insurmountable problem. Given normal or average intelligence, as measured by culture consistent tests, we are able to harness the cognitive forces of human intelligence.

I like the definition of the cognitive domain which Gerhard (1971) uses in her practical, teacher-oriented book:

> The cognitive domain includes all behaviors which place primary emphasis on the thinking and intellectual skills of the pupil (p. 89).

With important, but nonetheless minor exceptions, we all seem to

be eager and able to master basic cognitive skills. We learn to talk and even to read and write frequently before the first school teacher enters our lives. And if we don't, most of us still manage to function and live and generally avoid significant encounters with law enforcement authorities.

Much the same can be said about so called affective or adaptive skills. Gerhard (1971) gives us an equally succinct and useful definition of the affective domain: "... (it) encompasses behaviors which are essentially feelings, emotions, attitudes, appreciations, interests, and values (p. 89)."

We learn to relate to our environment, institutions, groups, and individuals at a fairly early age. And even if we don't function at optimum levels, we seldom fail because of deficiencies in these behavior areas. We may be isolates, hostile, and even unemployed over long periods of time, but we do not necessarily engage in the kind of self-destructive behavior which invites imprisonment.

Punishment Priority Displaces Providing Services to Meet Human Needs

We tend to regard anti-social acts, labeled criminal behavior by some (a harsh term for many "crimes" for which people are imprisoned), as if these acts were the results of deficiencies in cognitive or affective skills alone. In addition, many of us have a disconcerting habit of lumping all "criminals" into a single group. The thirty-year-old woman, raped by her own father at eight, and in trouble with the law at ten, and in and out of training schools, foster homes and jails, and now in prison for prostitution and "pushing dope," does not present the same problem as a young man (poor or rich) neglected, bored and buoyed up by beer and buddies, who steals a car and goes on a joy ride and accidentally kills a pedestrian. Both are quite different from the professional law breaker who makes a living from organized crime enterprises. Yet if you listen to many discussions of "crime in the streets" and "law and order," very little distinction is made among the individuals who comprise the criminal group. One would think that everyone in prison or jail is a rapist, a murderer, an armed felon, a professional criminal or some other variety of predatory monster.

Present practices of taking disturbed or inadequate people, particularly children and young adults, obviously unable to cope with the demands of an urban society and locking them up in an environment which further alienates them and which in no way provides them with alternative coping mechanisms is, I suggest, manifestly irresponsible. And then when a person released from this debilitating environment resorts to the same or worse behavior as before him imprisonment, we blame him and punish him again; our collective action begins to border on being downright dangerous.

Ryan (1971) suggests that blaming the victim is arrived at "subconsciously" as a compromise that apparently satisfies both our self-interest and our charitable concerns. We cannot bring ourselves to

attack the system that has been so good to us personally, and yet we want so badly to be helpful to the victim of social and economic injustice that we find fault with the victim and strive to "rehabilitate" him instead of the conditions which guaranteed the development of his anti-social behavior.

These are tough words and tough concepts to deal with. Anyone who even hypothesizes these kinds of principles runs the critical risk of being labeled a "Bleeding Heart" or a congenital "Do Gooder." I accept both risks and will proceed under their burden.

Failure to Meet Human Needs Generates Further Anti-Social Behavior

Unless we realize that people caught up in the criminal justice system are, for the most part, products of social, economic, physical and emotional environments almost guaranteed to produce anti-social behavior, we cannot come to grips with human concerns involved in working with offenders. It is easy enough to argue that many people "overcome" comparable handicaps and do not resort to "criminal behavior" and, therefore, something is intrinsically "wrong" with those who cannot overcome them. But are any two backgrounds, any two lives really identical? And what of the element of luck; at the very least it plays a part in that first encounter with the law--be it in the form of a receiving home, a local jail, or an individual policeman.

Aichhorn (1955) traces the individual socialization process and concludes that none of us could have learned to traverse "The long road mankind has travelled in attaining the present cultural level . . . in the short span . . . of growing up . . . without a lot of help from parents, friends, family, teachers, and others."

Aichhorn (1955) also points out how, if our realities are unacceptable, we escape into fantasy. Correctional staff describe, in great detail, the immaturity of prisoners, their unrealistic goals, their superstories about life on the street, their inability "to make it" in the "real" world. These prisoner fantasies tell us a lot. Nothing in the deprived life of many of them has served to teach them to survive in an alien culture--the middle class, work-a-day world--in which most of us are comfortable. Combine this deprivation with the harsh reality and horror of being in prison and we can begin to appreciate the need to fantasize and to seek out escapes from reality. If, as Aichhorn suggests, life experiences force us to conform to reality, and education to conform to our particular culture, then we begin to see the need for some practical alternatives to current modes of incarceration if we are to program prisoners for the achievement of socialization goals. Affective learning requires human models, active interpersonal relations, and prolonged continuous reinforcing experiences. A very pertinent study of successful persons from disadvantaged backgrounds underscores the conclusion that if a person is to see himself in a positive light, as good and capable, and to see the world as providing opportunities and rewards, it comes as a result of a long series of positive experiences

beginning at birth (U. S. Department of Labor, 1970).

Institutions are Not the Best Vehicle to Provide Human Services

There is some evidence that positive and meaningful relationships are sometimes developed between an individual prisoner and a particular staff member. They are, for the most part, unplanned and unstructured spinoffs from other primary responsibilities and functions. The Federal Bureau of Prisons and various state correctional systems have introduced an expanded role for some correctional officers in an attempt to formalize these kinds of efforts. Correctional officers have taken on counseling responsibilities as they deliberately attempt to have a positive impact on prisoner value systems and resultant behaviors. The lock-step of prison life goes on, however, even in the best of institutions. Work habits, human relationships, physical and social development are stunted. And as Carlson (1972) so aptly suggests, the longer the time served, the greater the chances for the on-set of irreversible paralysis.

Grosser (1968) suggests that with proper and careful arrangements of prisoner and staff groupings, prisons can provide resocialization services. Galtung (1968) suggests that we could design an institution devoted to the resocialization goal alone. Many question these hypotheses.

Can human needs really be served by institutions? Many say no. They argue, persuasively, that at the beginning of the criminal justice continuum we must abandon the use of jails and prisons--sometimes euphemistically called Detention Centers, Training School, or Youth Centers--and place difficult youngsters and troubled adults with people, either in actual family units or in small (5 or 6) groupings. At the terminal point of the continuum, these same people argue, the habitual or so-called "hardened" criminal must be allowed to live out his years, in custody if need be, but as a human being. His human needs must be respected. The price for whatever wrongs he has committed is his loss of freedom. If that isn't price enough, the deviance may be in the eye of the beholder, not the prisoner.

New Alternatives Must be Pursued

For these reasons, it is important to start to think in terms of new alternatives at significant points in the criminal justice system. Pre-commitment diversion programs can serve a large number of first offenders and offender participants in victimless crimes. These people can be placed in other than prison situations which can provide genuine opportunities for the development of positive coping mechanisms. The Federal Bureau of Prisons, recognizing this important need, requested and received legislative authority to use federal halfway houses as halfway <u>in</u> as well as halfway <u>out</u> centers. This means that courts can commit certain offenders to halfway house situations rather than to prisons.

If it is necessary to lock people up, their human needs must dictate the manner in which services are delivered. Changes required in the present system run the entire gamut and impact on all aspects of the criminal justice system; the required changes are interrelated and interdependent. It does little good to make the prison itself sensitive to human needs, if the police, the jails, the courts, the probation and paroling authorities and the communities themselves are not equally sensitive.

Post-Release is a Critical Phase

Grinker and Spiegel (1945) in their fascinating study of airmen during World War II discuss some of the concerns and anxieties experienced by the men as they faced demobilization. To a man, each identified that the things they wanted most was to go home; just like men in prison. Each man sweats out his last few missions, the time until the parole board hearings, or the actual release date. Waiting gives him too much time for reflection; he grows anxious and restless. When at long last he gets home he is peculiarly dissatisfied and disturbed. Nothing that happens lives up to this expectations. Fuss and excitement die down, he begins to envy the civilian, his job, his "belonging" and "belongings." Re-establishment of sexual life is not easy. The returning airmen (prisoners?) suspect their women of unfaithfulness. Home may have more than enough gratifications for the average person, but their hunger and needs are impossible of immediate satisfaction. Old conflicts and hostilities are renewed.

If the individual airman has sufficient normal adaptive functions in reserve, the passage of time resolves the turmoils and he is "reintegrated into American Life" (Grinker and Spiegel, 1945, p. 188). But what, as in the case of almost all offenders and few airmen, if there is no reserve or bank of "normal adaptive functions" to call upon?

We must open our minds to the many parallels around us. We understand and support the structured reintegration of the returning serviceman, and many others, who for one reason or another, return home after a prolonged absence. This understanding and support is not generally extended to released offenders. We send most of them home with a few dollars in their pockets and a sink or swim farewell. The absence of post-release supportive services for the average offender is critical.

There are many models we could build on. But the crucial point is that contact with law enforcement procedures must not worsen the human condition of the individual offender. And each must be placed in situations where he can acquire the skills necessary for survival in the dominant reality, the free world, not prison.

Conclusion

Have you ever noticed the manner in which traffic comes to a halt

or starts moving to one side in a very uncharacteristic disciplined fashion when the sound of a siren cuts through the air? I witnessed a most unusual combination of events during a cold morning this past winter. The sound of a siren was heard in the distance during a heavy early morning traffic rush. Some of the bumper-to-bumper traffic amazingly created a path for an on-coming ambulance. When, at one point, the traffic failed to make a large enough opening, the ambulance cut across traffic into the opposite lane and breathtakingly managed to weave in and out of traffic coming in the opposite direction, deftly cutting back into the proper lane as openings became available. I sat in my car watching the fascinating scene. Suddenly, the ambulance came to a dead stop. A school bus with silent but flashing red lights warned the ambulance of the presence of children getting on or off the bus. The ambulance couldn't safely cut around the school bus. Various "METRO" construction holes and equipment blocked every possibility. The ambulance was immobilized for a full precious minute or two and didn't move until the school bus driver, sensing what was happening, came out of the bus, [illegible]ied the children to the sidewalk and motioned the ambulance to proceed.

A society and a culture which has developed this kind of sensitivity and concern for human life is ready to find alternatives to prisons.

References

Aichhorn, A. Wayward youth. New York: Meridian Books, 1955.

Carlson, N. A. Corrections--The changing challenge. Justice, February 1972.

Clark, R. Sunday Star, Washington, D. C., November 14, 1971, p. B3.

The Folsom Prisoners. Manifesto of demands. November 3, 1970.

Galtung, J. The social functions of a prison. In L. E. Hazelrigg (Ed.), Prison within society. New York: Doubleday, 1968.

Gerhard, M. Effective teaching strategies with behavioral outcomes approach. West Nyack, N. Y.: Parker, 1971.

Grinker, R. R., & Spiegal, J. P. Men under stress. New York: McGraw-Hill, 1945.

Grosser, G. H. The role of informal inmate groups in change of values. In L. E. Hazelrigg (Ed.), Prison within society. New York: Doubleday, 1968.

Kearney, N. C., & Varner, G. F. The school, a multi-purpose developmental agency. In H. Ehlers & G. C. Lee (Eds.), Crucial issues in education. New York: Henry Holt, 1959.

Kvaraceus, W. C., & Ulrich, W. E. Delinquent behavior. Washington: National Education Association, 1959.

Maslow, A. H. Motivation and personality. New York: Harper and Row, 1954.

Newsfield, J. I haven't seen the sun for a year. Village Voice, February 17, 1972, p. 9.

The Penal Digest International, 1971, 1 (VI).

Pownall, G. A. Employment problems of released prisoners. Washington: U. S. Department of Labor, Manpower Administration, 1969.

President's Commission on Law Enforcement and Administration of Justice. The challenge of crime in a free society. Washington: U. S. Government Printing Office, 1966.

Roberts, S. V. Review of Maximum Security--Letters from California prisons by E. Pell (Ed.). New York Times Book Review, February 6, 1972, p. 5.

Ryan, W. Blaming the victim. New York: Pantheon, 1971.

Sullivan, C. E. Job development and placement of the ex-offender. Paper presented at Draper Conference on Manpower Development and Training, Montgomery, Alabama, 1967.

U. S. Department of Health, Education, and Welfare. Rehabilitation of the public offender. Washington: U. S. Government Printing Office, 1967.

U. S. Department of Labor, Manpower Administration. An evaluation of MDTA training in correctional institutions (3 vols.). Washington: Abt Associates, Inc., 1971.

U. S. Department of Labor, Office of Special Manpower Programs. A study of successful persons from seriously disadvantaged backgrounds. Washington: Human Interactions Research Institute, 1970.

Washington Post, Washington, D. C., January 28, 1972, p. B1.

HUMAN CONCERN FOR THE OFFENDER

Jerry O. Nielsen
Nevada State Department of Education
Carlson City, Nevada

Introduction

Despite fear, rising public concern, and pledges to reduce crime while restoring law and order--despite vast increases in funds for crime control, enlarged police forces, tougher laws and court procedures, we are still losing the battle against crime;--and we have no overall strategy to reverse the process. The recidivism rate among offenders released from some institutions has reached the scandalous 75 percent. The young offender constitutes our greatest single crime problem. There are many things predictable about offenders:

1. The correctional process he goes through will not rehabilitate him, and indeed, may do him more harm than good;
2. He will commit another crime within several years of release; and
3. The next crime will be more serious, perhaps more violent than the preceding one.

It seems overwhelmingly clear that our number one priority in war on crime should be rehabilitation of the people now under correctional controls. Every dollar spent on rehabilitation has a potential for being more cost effective in terms of reducing crime than a dollar spent in any other area of the national endeavor. We do not have to send out a search party to find out who will be committing crimes this year or next year or the next. We already have their names and addresses. We have a highly identifiable target population, and we are, it seems, throwing away a supreme opportunity for helping the individual who commits crimes in this country. If we believe that we have in essence a correctional setting, one that sincerely is rehabilitative in nature, then we must recognize that a majority of serious offenders in this country are being "corrected for the second, third, or fourth time." This must dispel the contemporary notion that the institutions called "prisons" are in any way rehabilitating or changing people.

The questions to be answered would seem to be: "How do we and what do we do to rehabilitate people?," and "Does man's interaction with prison environment shape attitudes and values that reduce the rehabilitative process?"

Aspects of Offender Behavior

Like the goals and objectives of correctional institutions, policies of such organizations are greatly influenced by conventional assumptions concerning criminal behavior. Correctional programs are

founded on a public conception of a criminal as a person who habitually engages in deliberate misconduct. In fact the conception of malicious intent is defined by statute. Although concepts of criminal behavior may be changing under a contemporary explanation of human conduct, it is clear that most of the opinion and official legal doctrine still supports the judicial notion that "criminals know the difference between right and wrong" and that his choice is subject to voluntary control. Criminals and prisoners, in other words, are believed to be capable of conformity, but are disposed to play the role of the rebel. Prisoners consequently are expected to exhibit anti-social behavior and to be resistive and unruly in their contacts with correctional authorities.

To a degree, prisoners' roles are conditioned by the judicial assumptions mentioned. These assumptions may be expected to strengthen staff/inmate conflicts as well as negative attitudes of prisoners. The prison world as seen from a conventional perspective is a world of conflict between forces of good and evil. Prisoners are expected to exercise their anti-social behavior if they can get away with it. Officers are expected to be sentinels of a good society who carry the full authority of the official community. So both try to play their respective roles in the correctional setting.

The current strategies for "reforming," "rehabilitating," "treating," or "correcting," criminals are to make available to inmates a variety of facilities, academic and vocational training, medical care, religious instructions, counseling, parole planning, etc. The assumption, it is said, is entirely up to the inmate to take advantage of treatment opportunities if he is so inclined. Behavior is still regarded primarily as a matter of personal volition. The reorganization of attitudes and modifications of effective attachments to objects and persons in the social environment are generally viewed as personal issues over which prison polices have no control. These assumptions have precipitated the apathy one sees in correctional institutions--this must change!

Analysis of the Problem

Today half a million or so persons are behind bars, denied normal relationships, and are often treated by staff who have no training or interest in rehabilitation. They are then put out on the streets and are expected to behave normally (non-delinquently) whereupon policemen must go about catching a large percentage of those who are released and then put them through the same meaningless process. We seem to have discarded our sense of reality; we are somehow afraid to look at the truth of the situation.

Prevailing public ideas on causes of criminality exert a very important influence on the activities of correctional administrators. Administrators regard themselves as representatives of the broader community when they deal with the criminal/inmate. Correctional officials carry a public trust and their duties and responsibilities are defined for them in terms of conventional beliefs concerning the delinquent

behavior. Thus, the objectives and policies of the correctional institutions are largely reflections of the beliefs and values that are indigenous to the broader community.

If institutional objectives deviate far from the broader community objectives, there is bound to be an encounter between community and correctional settings. Consequently, the assessment of change or trends in public expectations is an important task to the correctional official. To the extent that social attitudes of the broader community are supportive of, confused, or contradictory to correctional objectives, it may be expected that corrections policies will reflect these societal confusions and contradictions. This must change!

It seems that a systematic and convincing rationale for the use of "modern methods of therapy" has not yet made its way into the philosophy of correctional administration. In many cases, treatment programs are primarily designed to:

1. Bolster staff and inmate morale;
2. Institutionalize rewards for obedience and conformity;
3. Improve housekeeping practices; and
4. Serve any other identifiable custodial function.

The relationship of treatment to the acceptance of civilian responsibility after the inmate is released from the institution gets less attention than the immediate effects of the treatment upon problems of prison management. This does not lend itself to a humane system. We must move in the direction of the systems being not only humane, but to the point where it directs and redirects the behavior of persons institutionalized and where that direction and redirection is focused on helping the inmate become a productive member of society. The system should not be traditionally characterized by formal education, although education would have to play a major part in any rehabilitative program.

Prison experiences would appear to be a concentration of stimuli adapted to develop delinquent interest, attitudes, values, and appreciations. The experience produces the effect. Do the attitudes, values and behavior patterns exhibited by inmates in correctional facilities meet our (correctional personnel) rehabilitative expectations? Do the attitudes, values and behavior patterns developed through the inmates' interaction in environment (prison) need to be negative? How can the environment be a positive influence on behavior? We might accomplish the task of "rehabilitation" or move along the path toward a rehabilitative environment if we begin to identify and respond (educationally) to the affective domain of behavior.

Importance of Human Concern for the Offender

Maturing individuals, particularly in their adolescent years, develop attitudes and value systems that often remain unchanged even when they become adults. Sometimes the attitudes and values they adopt result

in their failure to become productive units in society. This is what mostly happens to inmates in correctional institutions. It must be argued that each individual has a right to develop his set of values and live by them. It may be argued equally well that individuals who have values far removed from the effective norms of society often become harmful to society or, at best, useless members of the group. We have decided that we do not need useless members (delinquents) in our social group; however, we do not want to eradicate them. Consequently, we do the obvious thing and segregate them from society as a whole. We must, therefore, make an effort to insure that the organism does not continue to be parasitic, but in fact, is able to survive without using society as its host.

Every individual has a set of attitudes, values, and interests which exist in his subconscious or, in most cases, are poorly defined. One of the most useful goals we could have as correctional educators would be to work with people to assist them in identifying and examining their values, attitudes, and interests; and to change them if the individual (we assume that he understands) decides other attitudes, values, and interests would be more desirable and useful to him and would not infringe upon the rights of others. All educators have some difficulty in identifying or answering the questions, "How do people develop values?" "How do people develop attitudes?" "What attitudes and values should a person choose?" "And why?" Whatever the answers may be or wherever the answer may be, we must seek them out.

People are not housed in correctional facilities because they did not develop the cognitive skill of adding two plus two. They are in correctional institutions because they behave in a way which is not acceptable by society. This behavior has a direct correlation with the attitudes, values, appreciations, and adjustments of individuals are also altered. Altering behavior should be our number one priority.

Bringing About Effective Change

Inmates are individuals. We do not want them cast in the same mold, but we do want to develop their individual potential in a positive way to the fullest extent. All individuals should possess minimally acceptable attitudes, values, and adjustments related to being able to respond positively to their environment.

There currently seems to be a "credibility gap" between the desired objective or objectives (rehabilitation) and the observed behavior. There is a tremendous gap between the stated institutional objectives and student behavior that will be accepted as evidenced by the objective as being achieved.

If we would turn our attention to a priority education system with primary emphasis in the affective domain, with the secondary emphasis being the cognitive and psychomotor areas, we would be on a path leading to a meaningful change for rehabilitation. The following is an overview

of what is involved in the affective domain in education. The affective behavioral variables are defined as interests, attitudes, values, appreciations, and adjustments of the individual. The affective domain, emphasizing the emotional processes, begins with simple behaviors of receiving and responding and continues through a complex process of characterization. The following will be used to represent the affective domain variables:

1. Receiving - the learner's awareness or passively attending to certain phenomena and stimuli (could be listening).
2. Responding - the learner complies to give an expectation by attending or reacting to certain stimuli or phenomena (interest).
3. Valuing - the learner displays behavior consistent with a single belief or attitude in situations where he is not forced to comply or obey (internal commitment consistent with external behavior).
4. Organization - the learner is committed to a set of values as displayed by behavior (successful internalization of the values).
5. Characterization - total behavior of the learner is consistent with the values he has internalized (philosophy of life - total behaving as you believe).

If society has any human concern for the offender, it must not treat the symptoms of the problem, but must in fact treat the problem. That problem involves people's attitudes, values, interests, appreciations, and adjustments. Offenders are people and we must perceive the offender rather than the offense; the person before we view the diagnostic label; confidence and encouragement rather than little hope; treatment as human beings rather than things to be manipulated.

It has been said that it is far easier to hate crime than the criminal; capture him; look him in the face; he is us; our children, our brothers and our sisters. We created him. Human compassion for other humans is still a most important equation to rehabilitation and should move us to do more of what is not only necessary, but humane to help offenders rejoin society as constructive human beings. Can correctional education really respond to the important educational needs? Everyone has been saying the only important "change agent" in prison is the classroom and the teacher.

Only through correctional educational renewal (new priorities and strategies) will the education system be able to respond to the real needs of the incarcerated.

References

Goshen, C. E. The humanizing process. Educational Technology, June 1971.

Krathwahl, D., Bloom, B., & Masia, B. Taxonomy of educational objectives. New York: David McKay, 1956.

Reekless, W. The crime problem. New York: Appleton-Century-Croft, 1967.

HUMAN CONCERN FOR THE OFFENDER

James J. Pancrazio
Sangamon State University
Springfield, Illinois

Introduction

Most, if not all, personnel in the field of corrections would probably agree that offenders should be communicated with and related to in human ways. Likewise, there would probably be overwhelming support for the belief that all human beings, including those labeled as offenders, should be treated humanly. Agreement and support for these two propositions would be apparent at least at an intellectual level. What we say or what we believe, of course, is not always congruent with our behavior--what we do. No doubt there is always some discrepancy between verbalizations and behavior. The relationship is never perfect, but an extreme discrepancy between behavior and beliefs or verbalizations is a matter of importance and grave concern.

Inconsistencies throughout our society are not infrequent. An individual may value freedom of the individual, for example, but become enraged at "hippies." Equality may be preached by those who will move if a black family moves next door. The protester may carry a sign proclaiming "love and peace" while he throws rocks at a policeman. The correctional officer may speak of rehabilitation in an environment that is primarily custodial and punishing. Many such inconsistencies may imply a lack of humanness or a lack of concern for human beings.

It appears that offenders have not in general been treated in human ways. Programs for both juveniles and adults usually focus upon a philosophy of custody and punishment. Approaches to the offender which primarily emphasize custody and punishment not only appear to be ineffective, but also seem to show little, if any, human concern for offenders. Even in situations where the philosophy of an institution states on paper that its goal is rehabilitation, this is no guarantee that there is human concern for the offender. Behavior toward offenders is most likely a more accurate index of humanness than written or stated goals, or verbalizations about rehabilitation.

It is ironic that the title of this paper focuses on human concerns for the "offender." It might be more appropriate for the focus to be on: "Human Concerns for the Person Who Also Happens to Be an Offender." The offender is a human being--he or she is a person! He or she is a person first, and an offender second. The statement seems simple enough, but is it? Do correctional personnel or the general public really believe it or practice it? Are "offenders" seen as persons? It appears often that to perceive the offender as an "offender" may result in some of the following: a concern primarily about the offense, rather than

the person; a concern about diagnostic labels, rather than the person; a belief that there is little, if any, hope for change or rehabilitation, rather than encouragement and confidence; communication that is impersonal, rather than personal; treatment of the offender as an "object," to be manipulated or who will manipulate, rather than as a person; perceiving the offender as untrustworthy, rather than as trustworthy.

Frequently, the focus is on differences, rather than similarities. Perceiving offenders as completely different from non-offenders tends to deny similarities between all human beings. That differences may exist is not denied, but the importance of the differences may be questioned. To the extent that a focus on differences serves to separate the offender from others, humanness will most likely be lacking. It might be noted that in at least some cases the difference between the offender and non-offender may be simply that the offender got caught, or that he was poor, and therefore was unable to provide for other means of avoiding institutionalization.

Regardless of differences, all human beings share similarities. Whether or not a person is labeled as an offender, it appears that all human beings in this society share some basic needs. Among the basic needs listed by Maslow (1970) the following are given: physiological, safety, esteem, affection, love, acceptance, belongingness, and self-actualization. Offenders, as well as all others, share these needs. Weinstein and Fantini (1970), in their study and work with disadvantaged children, found that the "fundamental concerns of poor children were shared by children from more privileged families--in fact by all people, adults and children (p. 67)." These concerns were related to (1) self-image, (2) disconnectedness, "a wish to establish a connection with society at large, to know where one fits in the scheme of things (p. 39)," and (3) control over one's own life. They further note that though the concerns may be identical for different people, they may be manifested differently "depending upon the social forces affecting the children (p. 40)." Regardless of how people manifest their basic concerns or attempt to meet basic needs, it appears that all people share some similarities. Differences appear to be more a matter of methods used to meet needs than of differences in actual needs or concerns. Offenders are human beings.

A major assumption of this paper is that <u>all</u> human beings <u>need</u> and <u>deserve</u> to be treated with dignity and respect as persons of worth, regardless of their circumstances, labels, problems, or difficulties. That this is not always easy is apparent. That it is necessary and possible is likewise apparent. To relate to those who we like, who share our values, who like us, and who are similar to us in various ways is no great task. The challenge is to behave humanly toward those who differ from us.

Humanness and Human Concern

Behaving towards others with human concern involves such aspects

as the following: understanding others from their point of view; communicating concern, acceptance, and caring; relating in genuine, authentic ways, being constructively honest; developing a relationship of mutual trust and confidence; and focusing on the personal growth and development of the other person. It is, in essence, a helping or facilitative relationship in which persons treat each other as "persons" rather than as "objects" or "things." The affective dimension--feelings, values, emotions--is emphasized. It appears that in interpersonal communication in general the affective is often denied or ignored. Offenders have feelings and values. Understanding him or her involves not only dealing with ideas, thoughts, or verbalizations, but also focusing on feelings and values. Ironically, this is appropriate for all human beings! Two questions will be explored in this paper:

(1) What does current research indicate concerning the necessity and importance of human concern?

(2) What approaches might be considered in achieving greater human concern?

The Necessity and Importance of Human Concern

Recent research has indicated that helping of facilitation in general has been severely inadequate. Carkhuff and Berenson (1967) view our society as failing to provide psychological human nourishment. Research reported by Carkhuff and Berenson is sobering. In a number of studies, various helpers, including such groups as the general public, laymen, and professional helpers, it was found that on the average these groups did not meet even minimal facilitative levels in helping another person. In other words, in general, helpers of various kinds were relating to the person being offered help in ways that were below the minimum level in order to help someone. On a five-point scale, the minimal level was 3.0. Few of the groups reached an average level of 2.0. A helper at level 2 was described as responding to superficial feelings, ignoring deeper feelings, communicating little positive regard, displaying a lack of concern or interest for the other person, and usually responding in terms of a prescribed role.

A most threatening aspect of this research is that it appears that most helpers tend to respond in this way--professionals as well as laymen. Another upsetting finding by Carkhuff and Berenson (1967) is that all human relationships may have either constructive or destructive effects. They state:

> Thus, in significant counseling and psychotherapy, teacher-student, or parent-child relationships, the consequences may be constructive or deteriorative on intellective as well as psychological indexes. In addition, there is extensive evidence to indicate that, to a large degree, the facilitative or retarding effects can be accounted for by a core of dimensions which are shared by all human processes, independent of theoretical orientation (p. 4).

In essence, then, all human processes may be helpful or harmful. We may harm as well as help. People may be worse off after contact than at the beginning. To a large extent whether or not a process is facilitative or retarding is related to the extent to which such dimensions as empathic understanding, nonpossessive warmth, genuineness, and concreteness of expression are present. These conditions or dimensions are basic to effective facilitative relationships. Patterson (1970) points out that these are basic to all good interpersonal relationships.

These conditions were defined by Patterson (1970) in a paper presenting a model for counseling and other facilitative relationships. First, empathic understanding includes understanding from another person's frame of reference, knowing what the other person means, being sensitive to another's current feelings, and communicating understanding to another. Second, nonpossessive warmth refers to a nonjudgmental, nonpossessive caring for another, valuing another as a person, without conditions. Third, genuineness means congruence of the helper who is open, honest, sincere, rather than "playing a role." This is not an unrestricted genuineness, rather the emphasis is upon being genuine in a non-destructive manner. Fourth, concreteness of expression means that the helper and person being helped deal with specific feelings, experiences or behavior, rather than focusing upon abstraction or generality.

Other conditions have also been reported. No doubt future research will yield more information concerning conditions which are related to effective facilitation. But, in terms of current evidence, it is obvious that facilitation or helping is not solely the realm or responsibility of the professional. The dimensions or conditions are important to all of us who are attempting to be more effective helpers--whether we are teachers, counselors, parents, correctional officers, correctional counselors, wardens, or chaplains--whether our setting is the home, the school, or the prison--whether we are professionally trained or laymen. As Truax and Carkhuff (1967) state, "the person who is able to communicate warmth, genuineness, and accurate empathy is more effective in interpersonal relationships regardless of the goal of the interaction (p. 116-117)."

Truax and Mitchell (1971) after reviewing a number of studies state that results indicate that "therapists or counselors who are empathic, nonpossessively warm in attitude, and genuine, are indeed effective (p. 310)." They add that the findings hold for a variety of counselors, regardless of training or theoretical approach; and for a wide variety of clients (college underachievers, juvenile delinquents, hospitalized schizophrenics, out-patient neurotics, college counselors, and a variety of hospitalized patients). Also, the findings hold for a variety of contexts as well as individual or group counseling. It is further pointed out that evidence

> suggests that low levels of accurate empathy, nonpossessive warmth, and genuineness are important factors leading to deterioration. Similarly, extreme improvement appears to be strongly related to high levels of therapeutic conditions (Truax and Mitchell, 1971, p. 310).

It appears to be clear that dimensions such as empathy and concreteness are important and basic to any helper in any situation with any person he is attempting to help. All persons need and can benefit from facilitative relationships, including those who are labeled as "offenders."

The effective helper, whether correctional officer, counselor, sociologist, or teacher, appears to be a person who offers high levels of facilitation. It is apparent that the trained per se are not the only persons who can be facilitative. Carkhuff (1969), for example, points out that there is extensive evidence that "lay persons can effect significant constructive changes in the clients whom they see (p. 6)." He also notes that there is "extensive evidence that lay persons can be trained to function at minimally facilitative levels of conditions related to constructive client change over relatively short periods of time (p. 4)." That we all can improve--be more highly facilitative--is not only encouraging, but also an indication of hopefulness for the future.

The difference between an effective and ineffective helper is obviously not simply a matter of his formal training or of his techniques. Combs, Avila, and Purkey (1971), on the basis of extensive research, state that effective and ineffective helpers differ in their beliefs. There were differences between the effective and ineffective helpers in terms of their beliefs or perceptions about what people are like, as well as beliefs about the helper's self-concept, his purposes, and his approach to the task. Some of these differences appear to be extremely relevant to human concerns for the offender. For example, effective helpers saw others as able to deal with their problems, rather than unable; as friendly, rather than threatening; as worthy rather than unworthy; as dependable, rather than as undependable. In terms of purposes, effective helpers saw their purpose as freeing others, rather than controlling. Their approach was directed more toward people than things.

Possibly a beginning point in terms of approaches to achieving greater human concern is to ask the following types of questions:

(1) To what extent do I offer conditions of empathy, nonpossessive warmth, genuineness, and concreteness to offenders?

(2) How do I perceive or what do I believe about offenders in terms of such variables as able-unable, friendly-unfriendly, worthy-unworthy, dependable-undependable?

These are not easy questions with which to deal. It is much too easy to see ourselves as we want to see ourselves regardless of the accurate of our perceptions. What approaches might be considered?

Approaches to Achieving Greater Human Concern

Another major assumption of this paper is that the starting place

for achieving greater human concern is to begin with the helper. Too frequently it appears that recomendations focus upon understanding the offender; his problems, his environment, his values. Though this is important, the focus here is for the helper to begin by examining and exploring his own values, assumptions, perceptions, beliefs, stereotypes, prejudices, fears, or uncertainties. Self-awareness and self-understanding, perhaps, will assist in understanding the offender. Leonard (1970), for example, states:

> The "race problem" is not something "out there" that we can fix or hire an expert to fix. We find that we must change ourselves . . . . For today and tomorrow every "solution" is personal, dwelling not entirely "inside" . . . nor entirely 'outside' . . . but in the interaction of the two (p. 40).

It appears that problems in corrections can also be perceived in terms of personal solutions. Carkhuff (1969) states that "if the helper cannot actualize his own potentials, he cannot enable another to do so (p. XII)."

Self-Understanding. It is recommended that the helper looks, first, at himself. What types of assumptions are implied by our behavior toward an offender? Even though our statements may indicate human concern, does our behavior imply concern? Not infrequently, the following types of statements have been voiced in staff development or training sessions:

(1) If you don't punish people, they won't learn--they won't learn to accept responsibility.

(2) The problem with this place is that we're too easy on the kids.

(3) Only 10% of these people will ever make it--they'll be back.

Such statements imply beliefs, perceptions, and assumptions about people. We tend to behave as we perceive. The helper who perceives offenders as needing punishment, stiffer controls, or as unable to change will tend to behave differently toward offenders than the helper who holds contrary beliefs and perceptions. An extreme over-emphasis on security implies that others cannot be trusted. Unfortunately, others may sometimes tend to behave as they are perceived--thus, creating a vicious cycle.

Our assumptions, beliefs, and perceptions of others are important aspects of the way in which we communicate and relate to offenders. Prejudices and sterotypes provide barriers to effective helping. Diagnostic labels, such as anti-social tendencies or sociopathic, may serve to assist in maintaining distance between so-called helpers and offenders. An offender is not a sociopath--a label--he is a person. To view

him as a sociopath or a psychotic may prevent the possibility of relating to him humanly with empathy, respect, and genuineness. It is apparent that these qualities are basic to helping.

There are a number of ways to attempt to examine one's own assumptions, beliefs, or perceptions. First, helpers might participate in some type of group process activity whether this is labeled as group discussion, group experience, or sensitivity training. It is assumed that participation is voluntary; that the purpose of the experience is facilitative, rather than punitive; and that the atmosphere is open, non-threatening, non-evaluative, and based upon mutual trust. The leader of a group experience is expected to offer the same conditions to staff as would be expected that staff offer to offenders. A second approach is to participate in some type of training program which focuses upon the core dimensions in order to improve relationships or interpersonal communication skills. A third possibility would be to utilize audio and/or video type to examine behavior in teaching, counseling, or in talking with offenders. A fourth possibility is to obtain feedback from offenders regarding their perceptions of staff via a questionnaire, or even, discussion with them. It should be noted that the staff member will undoubtedly receive information from all of these sources which is positive. All feedback will not be negative. Both are important.

Understanding Others. A second major approach to achieving greater human concern focuses upon understanding the offender. Understanding does not mean a careful analysis and study of his case record. In this paper, understanding relates to empathy--understanding the other person from his internal point of view. In essence, attempting to see things "through his eyes." It involves not only understanding his ideas and thoughts, but also his feelings, values, and emotions. What do things mean to him? How does he perceive?

Understanding empathically is viewed as basic to facilitation. Empathy in and of itself may not always be sufficient for change to occur, but it is necessary, whatever methods or approaches are utilized by a helper. Empathic understanding provides a necessary basis for the selection and utilization of specific methods in terms of helpee or client change.

In general, it appears that we tend to view others externally from our own point of view without attempting to understand how or why another perceives or behaves from his point of view. Likewise, the behavior of another seems often to be evaluated in terms of "good," "bad," "right," or "wrong," especially when his behavior contradicts our own values or appears to us to be irrational. Yet, if we could see "through the other person's eyes," we might discover that what appeared to be irrational is understandable if viewed from another perspective. For example, at a staff training meeting in a forestry camp setting, a detailman agreed that youngsters should be happy and appreciative--"after all they have the beautiful outdoors, fresh air, and surroundings to enjoy." But, to the ward, regardless of the beauty, this place was a "jail."

There are a number of ways to attempt to achieve greater understanding of the offender. First, and of most importance, is to listen to the offender. Listening is not the same as talking to him. Neither is it necessarily the same as hearing him. The emphasis is on listening and hearing from his point of view--trying to see things and understand as he sees and understands--trying to "put yourself in his shoes." It is possible to talk, or to hear, but fail to understand.

Second, reading and discussing information about the subculture of the offender might also be helpful. Textbooks might be considered, as well as autobiographies, biographies, non-fiction, and fiction (which abound in any paper back bookstore). Third, direct contact with the subculture and its people offers another experience to assist in understanding.

Any or all of these might be beneficial, but one resource, the offender, is immediately available. It is assumed that establishing a relationship of mutual trust, sincerity, openness, and honesty is an important first step in communicating effectively. That communication is not always effective is apparent.

Avoiding Defensiveness in Communication. A third approach to achieving greater human concern is through attempting to avoid behavior which increases defensiveness between the staff member and the offender. Defensiveness or threat, according to Patterson (1965) results in "withdrawal, resistance, aggression, or other kinds of obstructing behavior (p. 1003)." Neither understanding nor facilitation is enhanced by withdrawal or aggression. The defensive person may withdraw, resist, or become aggressive; all of these circumstances are detrimental to listening, understanding, or helping.

Rejection, moralization or humiliation can be expected to be detrimental rather than helpful. Messages involving these can hurt, whether the message is sent verbally or non-verbally. In many instances, it is not the message per se which is the problem, but how it is sent. Nonverbal behavior which implies that the offender is bad, worthless, or that he is an "object," can be as detrimental, if not more so, than a verbal message.

In discussing defensive communication, Gibb (1964) pointed out a number of ways in which defensiveness can be increased. He notes the following: (1) evaluation or judgment of the other, (2) using speech to control the other, (3) using strategems or games, (4) lack of warmth or concern for the other, (5) communicating superiority to the other, and (6) being dogmatic.

It appears that in general most people including offenders, do not like to be communicated with in these ways. Open, constructively honest, empathic, authentic communication that indicates concern for the other person is preferred to condemnation, evaluation, dogmatism, or superiority. Many of the previous suggestions, from a group experience to training to feedback from offenders, may be helpful in assisting in the

improvement of communication.

Some of the suggestions presented may be to some extent threatening. It is sometimes threatening to change. It is not easy to risk the possibility of seeing that we may not be as we thought we were. But all learning and change is not necessarily threatening. Even where threat is involved, the outcomes are worthwhile and rewarding.

Summary

In summar the following points were emphasized:

(1) Human concern for the offender involves relating to the offender as a "person," rather than as an "object" or "thing."

(2) Human concern involves establishing a facilitative relationship with the offender as a first step to assisting him regardless of the goal of the interaction.

(3) Research has indicated that the core dimensions and the beliefs or perceptions of the helper are important aspects of effectiveness in helping, regardless of setting, training, theories, or techniques of the helper.

(4) Approaches to achieving greater human concern included self-understanding, understanding others, and improving communicating.

Today there is much concern in the field of corrections about the necessity for change. Suggestions range from reducing the size of populations of institutions to new architectural designs. Though these and other changes are needed and important, there still remains the need for improved interpersonal communication and relationships. Changing size and architecture will not necessarily result in treating the offender as a person. Human concerns for the offender, it appears, can best be accomplished by people relating to people as "persons."

References

Carkhuff, R. Helping and human relations (Vol. I & II). New York: Holt, Rinehart, and Winston, 1969.

Carkhuff, R., & Berenson, B. Beyond counseling and therapy. New York: Holt, Rinehart, and Winston, 1967.

Combs, A., Avila, D., & Purkey, W. Helping relationships: Basic concepts in the helping professions. Boston: Allyn and Bacon, 1971.

Gibb, J. Defensive communication. Journal of Communication, 1964, 11, 141-148.

Leonard, G. The future of power. Look, 1970, 34, 36-40.

Maslow, A. Motivation and personality. New York: Harper and Row, 1970.

Patterson, C. A model for counseling and other facilitative relationships. In W. VanHoose & J. Pietrofesa (Eds.), Counseling and Guidance in the twentieth century. Boston: Houghton Mifflin, 1970.

Patterson, C. Phenomenological psychology. Personnel and Guidance Journal, 1965, 44, 997-1005.

Truax, C., & Carkhuff, R. Toward effective counseling and psychotherapy. Chicago: Adline, 1967.

Truax, C., & Mitchell, K. Research on certain therapist interpersonal skills in relation to process and outcome. In A. Bergin & S. Garfield (Eds.), Handbook of psychotherapy and behavior change: An empirical analysis. New York: John Wiley and Sons, 1971.

Weinstein, G., & Fantini, M. Toward humanistic education: A curriculum of affect. New York: Praeger Publishers, 1970.

HUMAN CONCERN FOR THE OFFENDER

Harry H. Woodward, Jr.
W. Clement and Jessie V. Stone Foundation
Chicago, Illinois

As I was sitting down to begin the arduous process of committing to paper the multitude of thoughts that roll so glibly off my tongue on this subject, an article by Dr. William Glaser titled The Civilized Identity Society came to my attention. It is what is euphemistically called a "think piece," and the author has managed to divide all of human history until now into three Phases so that he can make the point that we are now entering a fourth phase of human development. Dr. Glaser is a rather interesting and controversial individual who has written two books, Reality Therapy and Schools Without Failure, which I recommend to you if you are not already familiar with them. Both of these books relate to the topic under discussion and provide food for thought--as well as some indigestion.

In his article, Dr. Glaser uses a term "primitive survival society," which I find particularly apt for this discussion about offenders. He states that when this period existed, "man's primary goal in life was survival in a rigorous, often hostile, environment . . . When men failed to cooperate with one another, they suffered, and sometimes they died." I am taking this out of context, but I do this because it describes rather exactly the type of existence most offenders lead, both before and after a term in a correctional institution.

Many offenders seem to grow up in an atmosphere where little love exists either in the home or on the street. Consequently, they early learn the rules of survival which include being extremely selfish and self-centered to the exclusion of all else. They will cooperate only under coercion by a more powerful authority than their own, and they do this grudgingly. At an early age, they become identified as troublemakers and school becomes a battleground where they are in conflict with their teachers, principals and often their peers.

Just how large a role the schools play in the formation of delinquency was illustrated for me a few years ago by the prolonged teachers strike in New York City. While the strike was in progress, the juvenile detention homes in that city virtually went out of business. Runaways from home and other behavior which led young people to be incarcerated declined dramatically and the police department considered shifting men from the juvenile division to higher problem areas. However, the strike was settled, classes resumed, and the usual pattern of activity for all organizations I have mentioned returned to normal.

Errant behavior in schools leads almost assuredly into conflict with other arms of authority as I have indicated earlier. First, there is the truant officer, then the juvenile officer, juvenile court, detention in a home, supervision by a parole agent until finally, the

individual winds up in an adult prison. By and large, they have reacted hostilely at every step of this process and have been met with hostility in return. Let me say that it takes an almost superhuman ability to relate humanely to many of the people caught up in this cycle. They either reject outright any attempt to get close to them or feel that anyone who does is a weak individual who should be walked over. If they do decide to accept help, they become so dependent as to be a burden and msut suffer rejection again.

During the 14 years I have lived in Chicago, I have been engaged in virtually the entire spectrum of activity that affects an offender's life. I started off in Domestic Relations Court which is located in Central Police Headquarters in Chicago. My next stop was as a community organizer in several low income areas of the city. On one of these tours of duty, I directed a poverty program where we had a summer program specifically designed to use 150 ex-offenders. When I came to my present job over 4 years ago, I thought, with my background, I could step fairly easily onto the prison scene and work in that environment. It was not that easy.

First of all, I had to become acquainted with an entirely different value system from the one existing on the outside, even in the ghetto. Let me give you an example. The main problem I have encountered in ghetto areas in Chicago is apathy and lethargy. People tend to be fatalistic, and occasionally they try to break out of this pattern by violence against relatives, friends, and authority, usually represented by police. After this outburst, things quiet down until sufficient time has passed for another outburst to occur.

I usually found former offenders to differ several ways from this pattern. First of all, they were not as apathetic or fatalistic as the other inhabitants. They tended to have more physical energy than other residents, and they would often work better once they were determined to do so. Definitely they wouldn't follow orders as easily as regular workers, and they used to tax my powers of supervision regularly by questioning just about everything we were doing. I had to learn to be much more rational and less arbitrary in dealing with them than with other workers. Let me add that this is most trying for a supervisor with a work schedule to fulfill. I am probably as democratic as most other supervisors, but I didn't spend an undue amount of time consulting with staff before carrying out a decision. I think I may have adjusted fairly well, since we tended to get our projects completed with the ex-offenders in a reasonable time. Almost certainly, however, many of the ex-offenders run into supervisors who are not inclined to explain every decision and find it easier to fire a questioning worker and hire a more docile type.

For many people who have grown up in the ghetto, prison has no deterrent value whatsoever. I feel this is because the life they lead has been so hard, that the ideas of giving up their freedom for regularity of meals, clothing, and shelter is not always such a bad bargain.

Let me give another example on this point. Two years ago I was

approached by a national TV producer who was interested in doing a documentary on what prison life does to the individual. He asked me if I could gather together several former offenders who had been through every step of the criminal justice system in Chicago and the state for him to interview. When I say every step, I mean police adjustment, family court, Audy Home probation, St. Charles, criminal court, Pontiac, Stateville and parole. In retrospect, it was amazingly easy for me to locate five people who had been through this cycle.

The interview started out with the producer leading them, in effect, to tell about the horrible time they had experienced while institutionalized. They fell in with this scheme and competed with each other in relating horror stories. After about an hour of this, the producer said, "You poor guys, how horrible prison is! What have we done to you!"

At this point, they looked at each other and one of them said, "It's not all that bad, I learned to paint there, something I would never have done on the outside." Another added, "I dropped out of school at the 8th grade and completed my high school while in prison." The rest then added something good that had happened to them as a result of prison life. In sum total, their experience reminded me of a group of Navy veterans getting together and talking about boot camp and sea duty; there's a note of pride at survival after serving under so many mean bastards! However, no one wants a repeat. As for the ex-offenders, I'm sure they would not have seen their experience in quite the same light, if life had been better for them both before and after they served time.

Many of the former offenders I know lead a most casual life on their return to society. Even if they manage to get a fairly decent job, something always seems to come up where they lose it or it becomes boring. I have helped a few get work in the building where my office is located. The first one did a good job until drinking overcame him. The second was found one Saturday morning with a sizeable number of paintings from our penal art show in his possession. While I didn't adopt the attitude of Inspector Dupleis in Les Miserables and prosecute him, I confess, I was not as noble as the Catholic bishop who let Jean Valjean keep the silver plates and candelabra he had departed with in the night.

I have given the failures first, because I wanted to end with success. Three artists that I would have sworn would have been back at our first meeting place--Stateville prison--by now have apparently found part of the combination to success. One of them almost made me take up painting when he cleared $32,000 one year!

I have cited these cases, because I wanted you to know you were not talking to an expert who can identify easily those people who will or will not make a good adjustment on the outside and not be a recidivist.

In my regular job with the W. Clement & Jessie V. Stone Foundation, we offer programs that emphasize a positive mental attitude. One of the things I like to think a course such as this does is to concentrate on problem solving. In other words, when a person gets into a difficult

situation he will persevere instead of giving up at the first obstacle encountered. It also helps people establish habits and concentrate on goals. Perhaps the most important thing it does is to get offenders to think about things they can do successfully, instead of concentrating on the failures in their lives. Many of them are so used to failure that they become quite upset, if not hostile, when we discuss ways of changing habits so that they can become successful.

When I travel around the country spreading our "Positive Mental Attitude" philosophy, it frequently happens that the warden I am talking to feels that this is a program for staff. One of the conclusions I have drawn from this is that a great number of staff people are equally in need of programs to deal with their negative attitudes. I believe that they, like many other professionals--welfare workers policemen, judges,--dealing with "losers" in our system, have to be acutely conscious of the fact that their environment, surroundings, and the individuals they deal with just naturally incline them to be negative and act negatively after a period of time. For this reason, we try whenever possible, to include staff members, particularly custodial staff, in our sessions. We are not too concerned whether they become devotees of our way of thinking, but we do not want them to obstruct what we are doing.

One of the things I believe an offender is entitled to is an opportunity to change his attitude while behind bars. So many times I receive letters from inmates telling me that they have a rotten attitude. They know that they are aggressive, hostile, antisocial, abrasive, and the whole catalog of other traits which cause them to be in conflict with those around them. Their plea is that the only thing that happens to them is punishment, thrown in the hole, left in their cells and so forth. Nobody even seems to want to help them change their attitude. The majority of these people are not "sick" in the medical, pathological sense, even though they may be soul sick. I say this because I want to indicate that the help of a psychiatrist or psychiatric social worker is not necessarily the solution to what is troubling them. As a matter of fact, I believe most of them can best be helped by people who have no intention of treating them as sick individuals. The offender is like everybody else; if he thinks it is to his advantage to be sick, he will be sick.

What are some of the ways, then, that I believe correctional personnel can alter the situation I have described? As I indicated earlier in the paper, many offenders enter prison as victims of an environment where they have been taught to be selfish and self-centered, with the result that they become uncooperative with any form of authority. Prison life, sad to say, usually reinforces this attitude. Virtually the first thing an incoming offender is told is, "Do your own time;" in essence, show no concern for your fellow offender's plight. Anytime there appears to be a grouping of three or more inmates, there is thought to be a conspiracy and steps are taken to break it up. In short, the only type of cooperation insisted upon in prison is that concerned with official duties: keep the cell clean and free of contraband; do your assigned job, whether or not it happens to fit, and so on down the line. I rather

doubt whether cooperation gained under these conditions really leaves the inmates with a cooperative attitude.

With these conditions as a background, it is going to be monumentally difficult for any single individual to be really humane over a long period faced with institutional conditions. Since the system inclines the official to relate on a one-to-one basis, he must deal with a complexity of problems presented him by the inmates which would no doubt turn Solomon into a mutterer and shatter a saint. Strictly to preserve your own sanity, it is often necessary to build an emotional wall around yourself so you will not run dry.

From my point of view, one of the most helpful things that could be done is to construct situations in which it is worthwhile for inmates to cooperate constructively. I am thinking of groups from three to ten where they do things together, so that individual effort can be noted and appreciated, but is not dominant.

When I was with the poverty program, we had five-man teams assigned to do many tasks, and they got recognition for their contributions to the team. If a competitive element arose, I was not above shifting people around, so that a weak individual could be part of a strong team and share in the glory they provided. I would like to continue on this point, because I find it fascinating. However, I feel that structuring a program as I have outlined above could be the subject of another paper.

If there is one aspect of prison life that has piqued my curiosity more than any other, it is the policy that most prisons have established on visitors. Just about everywhere, there seems to be some kind of limitation on the number of people who can visit an inmate. The usual way this is handled is that those closest to the inmate; mother, father, wife, children, brother, sister, are allowed in first and if the limitation is not met by then, consideration is given to friends. I do not quibble with the priority given; we should strive to keep families together as much as possible, and they should be encouraged to visit their relatives in prison. I would like to suggest, however, that this is not unmixed blessing as far as promoting a positive mental attitude on the part of the inmate.

From a few of the experiences I have had in dealing with families of inmates, it seems that some of them go as much to carry bad news as anything else. The mother will sometimes tell the inmate how his being incarcerated has shattered the family; how could he do such a thing. The wife on welfare will relate how hard it is for her to get by and the problems she is having with the children. This litany of complaints could be echoed by other family members.

On the otherhand, relatively little attention is given to the roles that friends play in an inmate's life. Many times they cannot visit because of restrictions I have mentioned earlier, and I feel that this is a shame. A friend who will take time to visit is often one who is doing this to cheer up the person behind bars. He usually has no axes to grind and is coming in to let the inmate know that he is not forgotten on the

street. My wish is that limitations on visiting by number be abolished. If it is established that a visit by a certain individual would be harmful to the inmate or the institution, I can understand a restriction, if not necessarily agree with it. But to keep a person from visiting solely because the offender has the privilege of five visitors and his list is filled, I find this incomprehensible. Under my Alice In Wonderland definition, the word means what I want it to mean, "visit" also includes "correspondence."

During the past few years, an expanded interest has developed in volunteers working in prisons. This presents many problems for institutions, the most serious being that they are not as amenable to control as are staff and volunteers. Also, in many cases they are not reluctant to express the opinion that if they were in charge of the prison, it would be better run. Even in the few cases they are not reluctant to express the opinion that if they were in charge of the prison, it would be better run. Even in the few cases where I agree with them, I wish they wouldn't be so loud about it because it leads to feelings of insecurity on the part of the staff.

All things considered, however, I feel that they can be of great assistance to institutions in carrying out programs if they are properly introduced into the system. By that I mean, they get proper training in the etiquette of prison life and are given a job to do commensurate with their interest and abilities. Additionally, one thing I always try to do is break in volunteers with a group, rather than on a one-to-one basis. My feeling is that, for most people, it is easier to relate to several individuals at first, rather than trying to establish emotional rapport on a one-to-one basis. Where it is desirable for a volunteer to work on a one-to-one basis, I believe the group method facilitates the process, since the individuals have an opportunity to assess each other before moving on to the stronger emotional bonds required for a one-to-one relationship.

One of the most important functions that I see volunteer performing is acting as absorbers for the emotional energy released by inmates. At the moment in most prisons, staff must, of necessity, perform this job. This is an almost overwhelming responsibility and usually requires a person to build an emotional shield around himself to preserve his sanity. Volunteers are often able to absorb these feelings and react well with individuals. After all, if you are only inside one or two hours a week or less, you can hardly be worn down by the emotions you have to cope with. On the contrary, this interaction often makes the volunteer feel more alive and worthy with the knowledge that he is doing something worthwhile and having a direct impact on a person's life. In law, one of the principles of a contract is that the two parties must be at equity, i.e., they are in a position to benefit equally by the terms of the contract.

This is an important principle, and definitely one that should be observed in dealing with volunteers; they should get as much out of the experience as the inmate. Their efforts should be recognized and their

achievements rewarded by the staff of the institution. One of the things that worries me about some volunteers is that I can't determine what is in it for them. They express feelings that they wish to help some poor, unfortunate soul and this will be their sole reward. In these cases, a discharge of neurotic feelings is probably the reward for the volunteer, and these people should have careful placement.

Perhaps one of the most important functions a volunteer group can perform is to break the uniformity of sex that prevails in most prisons. Men's prisons are staffed almost entirely by men, and women's prisons by women. Volunteers can help add a level of sociability by bringing in members of the opposite sex, who can help remedy the deficiency that currently exists in this area and helps to raise tensions. Both men and women often have to affect an air of toughness inside the institution to show that they are not weak. Readjusting on release then becomes a major problem and one I definitely feel can be attacked behind the walls by sound volunteer programs.

Summary and Conclusion

One of the things I have tried to focus on in the paper is that perhaps the most humane thing an individual working in prison can do is to reshape his surroundings so that he does not have to be the isolated target for so much of the feelings--good, bad, or indifferent--poured on him by inmates. I have suggested some approaches which I believe, based on experience, might be applied to reduce tensions behind the wall, and so, make for a more humane setting.

Perhaps the most important point I want to get across is that none of us have limitless reserves of emotional energy that we can afford to spend in helping people solve their problems. With this in mind, I encourage you to help preserve what you have by using the resources available through having inmates interact with each other, relatives, friends, and volunteers. By accepting this assistance, you can make sure that your emotional bank account is not overdrawn.

HUMAN CONCERNS FOR THE OFFENDER AND THE DESIGN OF HUMAN ENVIRONMENTS

Charles L. Cooper
Southeastern Community College
Whiteville, North Carolina

The motivations underlying human concern for offenders derive from two sources, altruistic and pragmatic. Humane instincts lead us in attempts to alleviate conditions of suffering and discontent. Unfortunately, altruism without perspective and overall purpose can, and with uncomfortable regularity has actually contributed to suffering. Often, tempering and informing the altruistic with the pragmatic will save foundering good intentions.

This paper will approach human concern for the offender from a pragmatic stance. This position holds that motivation to understand and respect the offender will emerge upon the realization that successful corrections depend on accurate information about offenders' feelings, attitudes, and motivations. Human concern is a prerequisite to the rehabilitative process. And this is especially the case as correctional systems begin to employ principles of human environmental design in their operations.

Human environmental design is the systematic planning of environments in which people work and interrelate. Although all institutions are human environments, seldom are they consciously and comprehensively planned to foster particular kinds of behavior patterns. This paper will discuss means by which human concern may be expressed through an understanding of principles of human interaction as they relate to the interpersonal and institutional environment of the correctional system.

Lest much of what follows be misinterpreted, the term "human concern" must be clarified. Human concern in this context has three components; understanding (empathy), valuing, and acting. Human concern, here, does not mean simply caring for the offender. It is not by any means sympathy. It is, rather, the intellectual process of decentering; that is, understanding how things look from the perspective of someone else, respecting that perception, and finally, acting in recognition of that person's perspective.

These three steps are actually prerequisite social skills for successful interaction with any other person, but particularly offenders. Their importance as indicated above is not dictated by altruism, but instead by their essential role in the design of therapeutic environments.

The task of understanding another person is terribly complex. Thus a prime question becomes, what are the most important aspects of the offender's behavior or personality upon which to focus "concern?" There are many choices available. One could choose to sensitize himself to

unconscious conflicts which presumably motivate the offender's behavior--to elements of his past criminal history, IQ, or tested personality pattern. Each of these areas has its value. However, if one considers the primary objective of the correctional system to be rehabilitation, there are two areas of prime significance to the offender. The first involves his interpersonal relations or social identity. The second involves his motivation and skill to engage in socially constructive behaviors such as vocational, creative, or recreational activities. It is in these two areas that the great majority of offenders have difficulties which are directly related to their criminal activity. It can be inferred that improvements in interpersonal relations and in capacity and willingness for involvement in constructive activity reduces the risk of further criminal activity.

In order to better understand the interaction of offenders with social and institutional environments, it is necessary to examine some basic theory of communication and relationship of overt behavior to underlying constructs, such as roles, social identity and motivation. These basic principles will be presented and later applied to a particular case or portrait of an offender.

Interpersonal Relations and Social Identity

The psychology of interpersonal relations has developed a theoretical basis for an understanding of the social behavior of inmates. Leary (1957) found that all social behavior could be classified into two major dimensions, dominance-submission and love-hostility. Research in numerous populations has confirmed the generality of these two dimensions (Brown, 1965; Baumrind & Black, 1967; Becker & Krug, 1964; Shutz, 1958). There is also clear evidence (Leary, 1957; Rausch, 1965; Carson, 1969) that certain behaviors on the part of one person elicit complementary behaviors from others. For example, hostile behaviors generally elicit hostility in return, while love draws reciprocal affection. On the other hand, dominance prompts submission and vice versa. The strength of the eliciting property of one person's behavior on another is indicated by Rausch's (1965) findings that in normal children 77 percent of their "unfriendly" behaviors brought unfriendly responses, and 92 percent of friendly acts prompted friendly acts in return.

Complementary responding in social situations is common, expected, and comfortable. When non-complementary responding occurs the results can be extremely uncomfortable to the participants. The experience of relating in a friendly, open fashion only to be greeted with hostile sarcasm from another can be intensely painful. It is for this reason that participants in social interaction "arrange," usually unconsciously how they will behave with each other and systems of rules or norms arise.

All persons have preferences as to their mode of interaction, finding some more rewarding than others. For example, the strong, friendly leader seeks situations in which he can be dominant and loving, while

the sullen rebel prefers hostile and submissive behaviors. Preliminary research by the author indicates that despite personal preferences for expressing particular kinds of behavior, the way a particular person acts is strongly influenced by the behavior of others with whom he interacts. The situation under which the interaction occurs also has strong effects on proportions of affectionate and hostile behaviors expressed by children (Rausch, 1965).

If all behavior were governed entirely by environmental forces, including social, there would be extreme plasticity in personal functioning. Clearly, however, this is not the case. Instead, rigidity in behavior patterns is characteristic, especially among inmate populations. These rigidities are in part a function of social roles and associated personal identity. Roles in this framework are a set of norms governing behavior of an individual in a particular relationship or particular setting (Thibaut & Kelley, 1959). The social role prescribes the kinds of behaviors a propriate to the situation, again in terms of Leary's (1957) dominance and love dimensions. Like other interpersonal behavior, role-governed acts are most often enacted in complementarity to some other person's behavior. Hence arise the "symbiotic and mutually supporting" relationships observed frequently in social systems between officials and their clients (Empey, 1969). The doctor-patient, teacher-pupil, or counselor-counselee relationships are clearly defined, usually placing the official in a dominant position and the client in the submissive one. In the case of the policeman-offender or guard-inmate, the roles are at some level antagonistic. Thus the official is both dominant and hostile, the client is hostile and submissive.

Roles are not adopted, like clothing, to fit an occasion. They are not entirely interchangeable in that they come to represent a social identity or self-image. The self is both expressed and categorized by roles behaviors which offer some intrinsic satisfactions for the person (Mead, 1934; Carson, 1969). And once an identity has been assumed, there are strong homeostatic forces resisting changes in self-perception (Secord and Blackman, 1961). One of the prime means by which the self is maintained, even in a negative identity, is acting in such a manner as to elicit confirming behavior from others. Where personal identity requires a resistive and distrustful stance toward authority, the authority frequently needs to be provoked in order to sustain the posture. Unfortunately for both parties, the authority can usually be found and triggered into the desired role by a well-placed act of defiance. Both "official" and "client" are happily confirmed and sustained until another round is required. Either party may initiate.

Assumptions Regarding the Meaning of Human Behavior

The foregoing analysis of interpersonal interaction and social identity formation can be summarized in general terms as follows:

1. Human behavior always occurs in relationship to a responsive environment, usually social.

CONTINUED

1 OF 7

2. Human behavior can be interpreted at two levels. Every act has content, what is said and done and a relationship message, what the person communicates about his relationship to the environment.

3. A person expresses his social identity through his behavior, receiving the particular sorts of gratifications attendant on his role or set of behaviors.

4. A person's relatively stable identity is developed, sustained, and modified through his interactions with the environment.

5. There is a strong influence operating between persons so that one person's responding elicits or cues particular responses on the part of the other. Both individual acts and the enactment of a series of behaviors appropriate to a role will operate as a source of interpersonal influence.

Cyclic Phenomena in Human-Environmental Interaction

In the above discussion, principles of social interaction are presented. A recurrent theme in these principles is that of feedback. That is, information from person A's behavior will be "used" by person B to "determine" an appropriate response. Person B's response, then, will serve as feedback to A. Both persons soon determine what the other thinks of him or how he is "defined" by the other. Sometimes there is jockeying for position as each tries to reach for a comfortable definition of himself as, for example, the leader, the accuser, the helper, the sympathizer. Once both A and B have attained positions, there is frequently a tendency to maintain them, and roles solidify. This is particularly true in institutions where roles are publicly predetermined.

Once the behaviors of persons A and B have begun to constrict into regular patterns an interpersonal cycle of behaviors, expectancies and perceptions is established. The cycle is insidious; it operates tacitly out of either person's awareness. But it very powerfully determines each person's interpretation of both himself and the other.

It is quite difficult to estimate or measure the effects of such expectancy cycles. But it is possible to specify some areas in which they operate and some general characteristics; although, to be sure, their variations are plentiful.

Cyclic phenomena have been explored by numerous observers of human behavior. Laing (1970) poetically describes the torturous "knots," "tangles," or "binds" occurring as two persons classify each other as mean and greedy through spiraling levels of circular reasoning.

Jack feels Jill is greedy
because Jill feels Jack is mean

Jill feels Jack is mean
because Jack feels Jill is gready

Jack feels Jill is mean
because Jill feels Jack is greedy
Jill feels Jack is greedy
because Jack feels Jill is mean

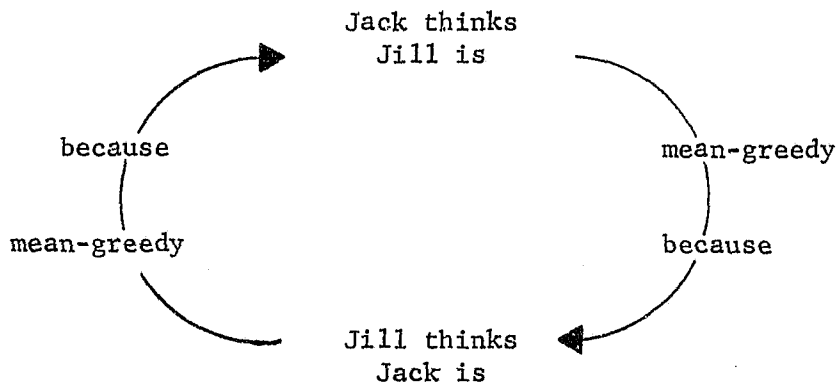

Fig. 1. Illustration of Laing's (1970) cycle of behavior, expectancy and perception.

It will be noted that neither party caught in an interpersonal cycle will see the "whole picture." Each interprets the relationship from his own perspective, not recognizing that it is his own behavior which perpetuates the vicious circle. Cycles are so persistent because neither "side" has or will admit any new information about the other, and thus a self-fulfilling prophecy ensues (Rosenthal & Jacobson, 1968). "Once a criminal (dumb kid, great athlete, fickly dame), always a criminal!" sets the course. Rosenthal and Jacobson have discovered the workings of the self-fulfilling prophecy in both animal and human experiments, most notably in the improved performance of elementary school children labeled academic "spurters" by their teachers.

Watzlawick, Beavin, & Jackson (1967) illustrate the cyclic phenomena at work even between huge political systems in arms races. "Nation A arms itself because it feels threatened by nation B (that is, A sees his own behavior as the effect of B's), while nation B calls A's armament the cause of its own 'defensive measure' (p. 96)." Actually cause and effect in this situation cannot be assessed because the interaction is circular. Each party sees himself as reacting to but not provoking the other's responses.

Application of Interpersonal Theory to the Offender and His Environment

Preceding sections of this paper have presented an outline of general concepts basic to an interaction analysis of persons in social

environments. Concepts of interpersonal influence, role, social identity, and the cyclic phenomena can be applied profitably to the affective and interpersonal responses of offenders to the institutions through which they pass. As indicated at the outset, "human concern," when informed by a clear understanding of the communication process and its effects upon perceptions, expectation, and behavior can be the key to designing more effective and humane environments for offenders.

A concern for the offender's well-being is not without a focus or without goals. It will be recalled that "human concern" involves three components: understanding, valuing (respecting), and acting so as to foster growth or development. This definition by itself provides a general focus. If one is attempting to promote growth, determinations must be made as to areas in which offenders desire or need to develop personally. Earlier, interpersonal relations and identity on one hand, and the skill and willingness to engage in constructive activity, on the otherhand were identified as areas of central concern for many offenders, given the makeup of present day prison populations.

Examination will be made of interpersonal relations, social identity, and motivation for constructive activity in the context of a correctional unit's environment. This will be accomplished by "portraiture," an attempt to present in very general terms a picture of the offender's ecological relationships before and after he encounters a state prison system for the first time.

The following paraphrase of a description of an "average" inmate of the North Carolina Department of Corrections will serve as an illustration for this analysis.

> Statistically the prisoner in North Carolina today is a white man (barely) who is (22) years old with a below normal IQ of 85.
>
> The chances are good that he grew up in a broken home in the lowest economic level of society.
>
> He dropped out of school after the seventh grade and probably got into trouble with the law soon after dropping out. He might have served time previously in a reform school, but he is currently serving his first term in the state's prison system.
>
> He is single man, an unskilled laborer, likely a thief, and an urban thief at that.
>
> He will serve less than a year in prison because he is there for committing a misdemeanor. But the man in another cell will serve three years because he is a felon.
>
> If he is a black man he is serving a sentence that is about two years longer than that of the white man convicted of the same offense, according to a recent Southwide survey.
>
> If he is a Negro and his crime was committed against a white man his sentence will be about seven years longer than it would have been if he had committed the crime against a Negro, and about eight years longer than the sentence of the white man who committed the same crime against a Negro.

The odds are two-to-one that he will serve time again after he completes his present sentence whatever the color of his skin (Walls, 1969).

Human Environmental Interaction Prior to Incarceration

The following analysis is highly speculative and general, but is designed to illustrate human environmental interaction in the life of a "typical" offender. One is led to speculate that this offender's life with people prior to conviction was markedly unstable with few opportunities to develop strong personal attachments especially with adults. In families saddled with poverty and marital discord there is the probability of nonsupportive emotional climate. What this means in terms of Leary's behavioral dimensions is greater likelihood of hostility, punitive parental dominance, and defensive rebellion (hostile-submission) on the part of the child. At least speculatively, identity formation shaped under such conditions is more likely to include negative self-related concepts. If these were too uncomfortable for him, he is likely to have devalued unrewarding family ties and sought affiliations outside the family.

On theoretical grounds it is probable that either acceptance of negative identity or rejection of family ties, which force such self-perception, lead in the direction of delinquency. Hirshi (1969) presents data relating weak family bonds to delinquent acts in a large California sample of junior and senior high school students. The offender's school experience, marked by failure, inadequacy, and dissatisfaction in an academic sense was almost certainly interpersonally unfortunate. Significant relationships with teachers in positions of authority must have placed him repeatedly in unenviable positions of the incompetent. Again, as in the family, his options included acceptance of negative identity or rejection of school authority, with the sequel being compensatory delinquent associations and activities.

Dropping out of school, with no skills or other means of constructive involvement in the society, must have quickly pushed this potential offender closer to illegal activity, partially by reducing his commitments and affiliations with non-delinquent peers and adults (Hirshi, 1969). Having most routes to socially constructive activity and relationships blocked in one way or another, the subject loses the controls or social restraints on criminal activity. Early brushes with the law successfully label him a deviant. His social identity, personal associations, lack of connection to conventional society, and possibly the compensatory attractiveness of criminal activity, work together with the resulting offense being the predictable outcome.

Cyclic trends abound in this portrait, particularly in school experiences. His probable early school failures, regardless of their causes, were more often than not accompanied by punitive behavior or neglect from a busy school teacher. A representative cycle consists of: the teacher's exasperated response to poorly completed school work ⟶

child's resentful frustration → more unsatisfactory work → repeated exasperation → continued frustration → seeking alternative (prohibited) social gratifications → more teacher criticism.

In theory, destructive cycles of this type can be broken. However, it is usually true that the persons involved, especially officials, do not recognize their own contribution to this cycle. Nor do they, given the overwhelming circumstances, such as overcrowded, ill-equipped classrooms, find alternative responses to the person caught up in this cycle.

In summary, for this offender the routes to interaction with the social environment in legitimate ways are effectively cut off. His attempts to operate within the bounds of conventionality place him in excruciatingly uncomfortable interpersonal positions; adult and peer interaction often "force" him to look and act weak, powerless, incompetent and resentful. These are all responses in the hate-submissive quadrant in the Leary (1957) framework. Rejecting this "inferior" role and its non-gratifying outcomes is his only viable solution. He breaks the vicious cycle occurring in his conventional environment by stepping out. But unfortunately he simultaneously steps into another chained sequence of interactions leading eventually to the criminal justice system.

It is important to recognize in passing that all this may occur without marked personality disturbance in the psychiatric sense. As Feldman (1969) observes, the evidence to date strongly points to the conclusion that the distribution of personality traits and pathology among offenders is quite similar to that in the non-criminal population. This underlines the contention that the "pathology" of criminality lies within the matrix of social interaction. In effect, our offender manifests the "normal" responsive of deviance.

Interaction within the Institution

Now the hypothetical interaction analysis of the offender "portrait" turns to the environment he encounters after having been confined in a state correctional institution. Examination of the new factors in his situation reveals the following:

1. He has been caught at an illegal act. In terms of social interaction, he has encountered an exceedingly powerful punitive force; it is terribly hard to recognize the full power of this force without being personally sentenced. This punishment places him in a very familiar interpersonal position; the one he repeatedly encountered in interaction with officialdom--teachers, police, and the conventional adult world.

2. He has been labeled or categorized. Role theory holds that this official act of labeling has crucial significance for self-definition. At least within the institution his role is distinctly established regardless of what rehabilitative program happens to be operating. Since officially established roles prescribe appropriate behaviors, it is unlikely that in relations with prison officials he will establish interpersonal ties with them based upon self-respect, personal responsibility,

or strength; all Leary love-dominant positions. So this leaves him with the old "subcultural" relationships with peers similarly labeled--a situation which will not by itself accomplish rehabilitative aims.

3. He has been stripped of all effective power and most sources of gratification. Powerless and unable to deal or interact with the legitimate society on equal terms, he is very unlikely to choose to interact from an inferior position. All historical evidence indicates (in our hypothetical account) that he has rejected powerless positions in the past. He will not accept them now except under coercion. And this probably means his personal engagement may simply benan attempt to placate authorities until he can extricate himself from their grasp upon release.

The central issue in any program for inmates is: "Who am I really doing this for, myself or them?" When the answer is "myself" the activity becomes genuinely rewarding. When the answer is "for them" no matter what things look like on the surface, the offender is still caught in a position of powerlessness, one he would never choose on the outside. And since important gratifications are not available under these circumstances, learning is reduced and rehabilitative aims are frustrated.

All in all not much really changes when the offender is imprisoned. The same cycle of interaction, the same definition of self are being enforced by the actions of an institution.

Human concern for the inmate means recognizing "what it must be like" to be placed in an environment which reinforces the very kinds of relationships and the same attitudes toward prescribed activity which has led to criminal activity in the first place. Human concern means recognizing the differences between situations which are productive or personal change, and ones which are counter-productive by being the "same old thing" from the offender's perspective.

Suggestions for Acting upon Human Concern by Changing Environments

Human concern has been presented as the act of decentering; seeing things from another person's perspective, respecting that perspective and acting to foster personal development given that perspective. Understanding the offender is greatly facilitated by a clear understanding of the laws of human interaction, interpersonal influence, social identity, and cycles of behavior. The question now becomes, what kind of activity is most likely to improve the effectiveness and value of correctional programs given all the restraints necessary to protect the public.

The very general suggestion, from the point of view of social interaction theory, is this: In any way possible, consistent with public safety, attempt to design, adjust, modify, or nudge the offender's day-to-day environment in a direction to break up destructive patterns and initiate constructive ones. It is important that the whole environment be examined and reviewed frequently, otherwise one's own contribution to that environment may be overlooked. Recall the example of the arms race cycle

in which the other nation was invariably seen as the cause of escalation. More specifically, what are the kinds of environmental design problems which might be dealt with?

Interpersonal Cycles: Destructive and Constructive

Perhaps the most difficult design problem is how to defuse destructive cyles of behavior and expectation. The interpersonal theorist, lacking the practical knowledge of corrections staff, must operate on cheap inspiration. However, the following steps might be considered basic:

1. Identify all the elements of the cycle; who does or says what to whom, what unfortunate events seem to occur repeatedly, and how do they affect parties involved. Remember that a "party" may be a whole institution reacting, a rejecting community, or a single person.

2. Attempt to find some way to interrupt the cycle. Here invention and artistry of the highest form need to be exercised. The object is to act so as to alter a pivotal expectation, perception, interpretation, or event which perpetuates the cycle. For a simple, one-person example, an offender frequently violates rules after visits with his wife. Response: Substitute a counseling session for the usual ineffective punishment. Find alternative means for him to deal with stress she evokes. The same approaches can be used for "systems" involving several persons or entire institutions.

3. Watch carefully the effects of the intervention. Generally cycles are deeply ingrained and may require repeated or persistent attempts to reverse their effects. Successive approximations to an ideal state of affairs is all one can expect, although in some cases astonishingly rapid changes occur when environments or interaction patterns change.

4. Look for ways to initiate constructive cycles. Constructive cycles are generally based upon healthy interdependence, clear (not necessarily high) expectations, and reliable reinforcement or gratifications for effort.

The Problem of Powerlessness and Negative Social Identity

Theoretically there is a connection between social identity and the roles in which a person operates. Successful performance of personally gratifying role behaviors has been the occasion for change in self-concept. Thus there is basis for using role reversal as a means of legitimately offering offenders the power and esteem they seek. Program possibilities using role reversal principles might involve inmate self-help projects, community service activities, speakers engagement. The essence of this kind of design is seeking a task requiring leadership, judgment, responsibility. If the task is itself desirable and rewarding, the appropriate roles will likely emerge.

In addition, powerlessness is combated by clear rules that apply to both the "official" and the "client." More clearly understood contracts between the powerful and powerless would be desirable. The increased use of discretionary power in the criminal justice system cannot help but decrease the inmates feeling of self-mastery and control. In effect it can actually infantalize him (American Friends Service Committee, 1971). On the other hand, the use of clearly agreed upon behavioral objectives and educational system approaches in adult education is a step in the direction of increasing the offender's autonomy and self-determination.

The Problem of Reinforcement

Prisons were originally designed to prevent reinforcement, reward, or gratification. With the increased understanding of behavioristic psychology, it now appears counter-productive to isolate individuals for long periods from reinforcement. In fact the task of corrections has now become to link socially constructive behavior to meaningful rewards. Hence, the emphasis on vocational training. The design task here is to see that offenders actually get the rewards. Each step towards opening wider ranges of incentives has dividends as illustrated by performance of juveniles in the National Training School for Boys, Washington, D. C. (Cohen & Filipczak, 1971).

The Problem of Isolation and Interpersonal Detachment

Here the design problem is not necessarily how to improve relations between inmates, but to improve or offer means by which inmates may develop and sustain relations with a community. Here, as above, the need is for means to open correctional institutions to the community and vice versa. Promising steps in this direction are underway. An example is the growing liaison in some communities between colleges or technical schools and correctional units. Inmates are in some cases attending such colleges, and equally important, the colleges are sending volunteers to work in the institutions. Improved means are being discovered to make student and inmate contributions valuable to each other.

Problems of Individual Relationships

Changes in the "design" of human environments is not a problem exclusively for the administrators of the criminal justice system. Insofar as the environment consists, in large part, of people, the quality of relationships between institutional staff and offenders is quite significant. Communication difficulties abound when role stereotypes interfere with openness, both on the part of the offender and the staff. However, it should be noted that the process of working through sterotypes is the rehabilitative process, and personnel who are not clearly aware of their import need support in the patience-consuming task of relating beyond stereotypes. An environmental change occurs whenever persons relate differently. The change is by "design" when it is based upon informed human concern.

Summary

Human concern has been defined as the act of decentering; that is (a) perceiving the world from the vantage point of another person, (b) respecting that perspective, and (c) acting, with regard to that unique vantage point, in a manner which enhances development or growth. Human concern so defined is seen as the prerequisite skill for recognizing, and changing where appropriate, the effects of institutional environments on offenders.

The theory of social interaction and communication is a helpful tool in analyzing institutional effects. It has been established that persons influence each other's behavior strongly. Roles are developed between persons to regulate behavior. However, once assumed, roles affect social identity. In the case of the offender negative identity or self-definitions may lead to criminal activity.

Both interpersonal behavior patterns and self-definitions are perpetuated by cyclic phenomena such as the self-fulfilling prophecy in which actions by person A trigger responses from person B, or another element of the environment, which elicits more of the same from A. Neither "party" in the cyclic transaction realizes his own part in perpetuating the behavior of the other.

Formulations of interpersonal theory and theory of cycles can be used to examine both the process through which criminal behavior develops, and the ways institutions can either serve to sustain the pattern, or offer alternatives to it.

References

American Friends Service Committee. Struggle for justice. New York: Hill and Wang, 1971.

Baumrind, D.,& Black, A. Socialization practices associated with dimensions of competence in preschool boys and girls. Child Development, 1967, 291-328.

Becker, W., & Krug, R. A circumplex model for social behavior. Child Development, 1964, 35, 371-396.

Brown, R. Social psychology. New York: Free Press, 1965.

Carson, R. Interaction concepts of personality. Chicago: Aldine, 1969.

Cohen, H. L., & Filipczak, J. A new learning environment. San Francisco: Jossey-Bass Inc., 1971.

Empey, L. T. Delinquent subcultures: Theory and recent research. In D. R. Cressey & D. A. Ward (Eds.), Delinquency, crime, and social process. New York: Harper and Row, 1969.

Feldman, D. Psychoanalysis and crime. In D. R. Cressey and D. A. Ward (Eds.), Delinquency, crime, and social process. New York: Harper and Row, 1969.

Hirshi, T. Causes of delinquency. Berkeley: University of California Press, 1969.

Laing, R. D. Knots. New York: Pantheon, 1970.

Leary, T. Interpersonal diagnosis of personality. New York: Ronald, 1957.

Mead, G. H. Mind, self and society. Chicago: University of Chicago Press, 1934.

Rausch, H. Interaction sequence. Journal of Personality and Social Psychology, 1965, 2, 487-499.

Rosenthal, R., & Jacobson, L. Self fulfilling prophecies in the classroom. In M. Deutsch, I. Katz, & A. R. Jensen (Eds.), Social class, race, and psychological development. New York: Holt, Rinehart, and Winston, 1968.

Secord, P. F., & Blackman, C. W. Personality theory and the problem of stability and change in individual behavior: An interpersonal approach. Psychological Review, 1961, 68, 21-32.

Shutz, W. C. Interpersonal underworld. Palo Alto, California: Science and Behavior Books, Inc., 1958.

Thibaut, J., & Kelley, K. The social psychology of groups. New York: Wiley, 1959.

Walls, D. What he is, is a criminal. The Charlotte Observer, March 31 through April 9, 1969. As cited in Assessment of crime and the criminal justice system in North Carolina. Raleigh: North Carolina Governor's Committee on Law and Order, 1969.

Watzlawick, P., Beavin, J., & Jackson, D. Pragmatics of human communication. New York: Norton, 1967.

ESTABLISHING

A PHILOSOPHY

(2.0)

Introduction

The second major step or function in the Model of Adult Basic Education in Corrections (Ryan, et al., 1975) is the establishment of a philosophy. The philosophy serves as a framework against which needs for adult basic education can be assessed. Once the philosophy is established (Step 2) and the ideal is described, the latter can be compared with the real life environment (Step 1), and assessed needs (Step 3) will be revealed.

The philosophy will "undergird all functions and activities of the adult basic education delivery system (Ryan, et al., 1975, p. 45)." In establishing a philosophy for adult basic education for a particular institution, the overall institution philosophy as well as a philosophy of corrections must first be established. The adult basic education philosophy must not be at odds with either the corrections in general or the particular institutional philosophy. This is further expounded upon in Smith's paper, "Developing a Philosophy for Adult Basic Education in Corrections."

A paper by Howard Higman begins this section by tracing the evolution of the current, and predominant, adult basic education philosophy. Higman describes the influences exerted by the Iron Law of Wages, automation, immigration, the war on poverty, Malthus, and Darwin. Nichols and Warren continue with descriptions of other aspects of man and society which must be considered when establishing a philosophy. Nichols focuses on "Some Observations from the Family of Man," while Warren writes about the effects racism, slums, hunger, and parental involvement have on today's citizens, and how these must all be taken into consideration when establishing a philosophy of adult basic education. Snider, in "Focus on the Future," describes various aspects of and lists questions regarding today's society which must be taken into account when establishing a philosophy.

While considering these various aspects of man and society, it is also helpful to follow certain steps when establishing a philosophy. Sessions has delineated some of these in his paper, "Developing a Philosophy for Adult Basic Education in Corrections." He emphasizes the need for a philosophy to be idealistic, while at the same time, tempered with realism.

Jaksha describes how offender and staff philosophies play a part in the adult basic education philosophy, and how they may need to be altered if they are not to conflict with the adult basic education philosophy of the institution. Similarly, Brinkman lists and describes some of the attitudes or pitfalls one may encounter which should be avoided when attempting to establish a philosophy.

Finally, Ryan's paper underscores all the previous papers. It describes the current situation in corrections, as well as offender characteristics and the effects many current programs have on inmates and as a result, on society. Ryan continues by describing a new philosophy

of adult basic education which underlies the Adult Basic Education in Corrections Program, and which is demonstrated in the description and explanation of the Model of Adult Basic Education in Corrections.

Reference

Ryan, T. A., Clark, D., Hatrak, R., Hinders, D., Keeney, J., Oresic, J., Orrell, J., Sessions, A., Streed, J., & Wells, H. G. Model of adult basic education in corrections. Honolulu: University of Hawaii, 1975.

THE NEXT STEP

Howard Higman
University of Colorado
Boulder, Colorado

You do not accept the time-honored idea that "That Which Is Will Be." The Americans are the first persons on the earth to decide to design life for themselves. Thomas Jefferson asserted the right to the pursuit of happiness. The Supreme Court of the United States, uniquely amongst the courts of the world, is occupied not with the administration of justice, but rather with the definition of justice. It is not without significance that only Americans would design artificial institutions, such as the League of Nations, which was intended to replace the institution of war.

The European fairy tale begins with the phrase, "Once upon a time." As the British writer, Henry Fairlie pointed out, the American fairy tale begins with the phrase, "Once upon a tomorrow."

The young are disturbed that we have not more nearly solved our problems, but little do the young know that we are the only society in perpetual search for the definition of, and the labeling of, its problems. By and large other cultures accept the conditions that they find. Frenchmen know that that is impossible; that one merely accepts the hell of marriage as part of a reality.

The remarkable thing is not that we have not solved all of our problems, but rather how rapidly we define problems and set to work to solve them. There was no such thing as the problem of unemployment until 1920. Examination of the literature will reveal that prior to 1920 the word was not "unemployment," but rather "indigent" which referred to a sort of moral defect. Calvin Coolidge is the first American president to refer to unemployment in his famous statement, "... with our widespread lay offs of men, unemployment results."

Up until the time of the inauguration of President Eisenhower, there had never been such a thing as air pollution. That is not because the air was clean, but rather because it was not understood that the haze that blocked the view and made the eyes smart was more than merely carbon particles called smoke mixed with water particles called fog.

In 1953, and not before, a chemist at California Institute of Technology, Arie Jan Haagen-Smit, took a volume of air from Pasadena into his laboratory, and discovered that far from being harmless, it was full of lethal particles from hydrocarbon emissions from combustion engines. General Motors spent $3 million to try to prove Haagen-Smit was wrong and succeeded in proving he was right. They then wondered how long it would take us to find out that the internal combustion engine was doomed. Ten years later the American Association for the Advancement of Science

established the Air Conservation Commission in 1963, and now we have established a basic federal agency to clean the air.

Let us step back and put ourselves into historical perspective. You are committed to basic adult education primarily as a result of three major revolutions which have occurred in our time.

The first of these is the repeal of the Iron Law of Wages. Our fathers and grandfathers were aware of the fact that by standards that we in Western Europe were to live by, the crust of the earth was stingy. David Ricardo stated the Iron Law of Wages; providing that most men would necessarily have to live at simply subsistence. The Reverend Thomas Malthus went even further in his statement of this formulation, providing that food would increase arithmetically whereas population would increase geometrically, and thus the surplus population would be eliminated by vice, famine, and war.

Throughout all time, until now, the search for food was the basic struggle of man. In our lifetime the green revolution has reversed these relationships and produced an abundance of food. In the United States in the decade 1960 to 1970, one third of the American farm families were taken out of farming. At the present rate of the drop out of persons from farming, we can predict in the not too distant future when the number of farmers will be smaller than the number of employees in the United States Department of Agriculture. Last year in India more cereal was produced than could have been consumed by the population of India had it been delivered to them.

The first and most important fact of our time is the migration of our predominantly rural population from all over American into the empty urban cities. Largely agricultural life is not too dependent upon the verbal skills provided by a high school education. Even fifty years ago most people lived lives which did not require the skills taught by high school. What they knew they learned on the job, on the farm, or in the factory. Now in the empty cores of our cities these people have migrated, and there is no place for a non-verbal boy or girl.

The second revolution, of course, is the assembly line invented by the world's greatest radical, Henry Ford, which was developed to enable persons who do not know how to, to. The assembly line, coupled with automation, has produced, multiplied by thousands of times, the productivity of man's labor, creating simultaneously the affluent society and unemployment. We now calculate that by the time they are forty years of age, 90 percent of our graduates of college this year will not be able to make a living by the skills we have taught them, since they will not be needed. We foresee a time when the esthetic ethic may replace the puritan ethic.

The third revolution to which I will allude is the revolution in the conception of the cause of poverty. The elimination of poverty is now on the agenda of the American people. It was not on the agenda of President Kennedy in 1960. From the beginning of time until the middle

of the nineteenth century, poverty was thought to be caused by the gods or God. Primative man was controlled by millions of animate spirits. We speak of this as animism. Each drop of rain, each blade of grass has its own spirit. The shaman or witch doctor seeks to prophtiate these spirits and get them to act. Then we come up to the Greeks who simplified the definition of gods--some 30 or 40 on Mount Olympus. One, I recall, was a drunk. I rather liked Bacchus. If you read Euripides or Aristophanes or Sophocles, you will see that the Greeks knew that life was in the hands of the gods. Then the Jews came with Jehovah and the Christians with Christ, and the Bible tells us that: "The poor thee shall always have with thee." "God moves in mysterious ways, His wonders to perform." My Presbyterian father believed in predestination. If a man is poor, it is God's Will; if a man is rich, that is God's Will. Far be it for me to interfere with God's Will.

In the middle of the nineteenth century, God's Will was replaced by Charles Darwin's inheritance, and though you are enlightened, most of your relatives today believe that people's personalities are largely determined by heredity. Charles Darwin had a museum in 1850 with a hierarchy of skulls: climbing a ladder of superiority, starting at the bottom with apes and chimpanzees, then Negroes, then Orientals, and finally Europeans, with Englishmen at the top. He had a poet, Rudyard Kipling, celebrate the white man's burden. Rogers and Hammerstein, with Gilbert and Sullivan, sang the praises of Englishmen. These things are related to the acceptance of the British Empire, Pax Britania, and white supremacy.

Now in the twentieth century, starting with William Graham Sumner's book, Folkways (1906), coming down to Benjamin Bloom's Stability and Change in Human Characteristics (1964), behavioral scientists and medicine are teaching us that the interesting things about persons are learned. It is this realization of the potential equality of all human beings, regardless of race, which is the cause of the breakdown of the British Empire, is the cause of the breakdown of the white supremacy, and the cause of justice of Earl Warren's decision of 1954. Thomas Paine and Thomas Jefferson asserted from a philosophical point of view over two hundred years ago that all men are created equal--equally stupid. They are born with a blank slate, and they either do or do not learn. They become what they learn.

This is why you have committed yourselves to teaching.

References

Bloom, B. Stability and change in human characteristics. Chicago: University of Chicago Press, 1964.

Sumner, W. G. Folkways. New York: Ginn and Company, 1906.

THE NEXT STEP

Roy C. Nichols
The United Methodist Church
Pittsburgh, Pennsylvania

Swimming Upstream

The American educational establishment today, as you know, is involved a reorientation of methods as well as goals. You represent the assurance that the educational techniques in our correctional institutions will keep abreast with the times. In fact, because of the atypical nature of your assignment, you may be able to make a significant contribution to the educational community outside your institutions.

Your work is like swimming upstream. Most of your effort within the correctional institution is spent with a segment of the American population branded by the stigma of personal failure, anti-social behavior, rash destructive acts against fellow human beings, or a combination of all of these misfortunes. The freedom of your students is restricted because society has decreed that they are not trustworthy, or because of some infraction they must be punished. This poses some immediate motivational problems for the teacher.

In addition to this circumstantial environmental factor, the motivation of your pupils is further complicated by the fact that some of them feel justified in the anti-social action which led to their incarceration. They may be convinced that their offense is small compared to others who are free because they are protected by greater financial resources, more adequate legal services, or sheltered by social position and political influence. These factors may contribute to an inward sullenness which may make the whole educational process much more difficult.

Our Task: The Renegotiation of the Individual

The adult educator in the correctional institution must attempt to motivate and educate students in spite of detrimental student attitudes toward the correctional setting, or their deep feeling that society has unjustly condemned them.

Your approach to the educational task, however, is based upon the fact that regardless of their attitude, most of the inmates in our correctional institutions will eventually be released. When and if they are reinserted as free agents in society, and in spite of the years of lost opportunity and the stigma of a felonious record, society will still expect them to earn an honest living and make a normal adjustment even though burdened with the handicap of their history.

In some sense, then, the social readjustment of your students is comparable to those difficulties encountered by persons with physical or mental impediments. But in addition, the life of the released inmate is further complicated by the fact that he may encounter hostility and suspicion rather than sympathy and patient understanding.

It is my awareness of these odds and my observation of the seriousness of your intent, that prompts my being here. It is my hope that what I have to say may provide helpful inspiration and light your fire if you have grown cold and hardened in the face of your difficult teaching and counseling situation.

Basic Requirements

Education, in any setting, has three basic requirements if there is to be any hope of success: First, there must be the presence of a skillful, understanding, and devoted teacher; second, there must be a capable student--or else the educational process must bring the student to a point of capability; and third, there must be an attitudinal climate which contributes to the motivation of both the teacher and the pupil.

Motivation may sometimes originate from unexpected sources. You've heard the story of the mother who was trying to get her little daughter to enter the school building on her first day. The child cried and refused to go in. She was afraid of the strange new setting. The mother then sought the aid of the teacher. The teacher tried to calm her without success. Finally the teacher and mother asked one of the pupils, a little girl named Betsy, to see if she could persuade the reluctant newcomer. Betsy confronted the frightened little girl and said: "You listen honey, if you expect to get to college, you'd better come in here and get started!" In a few minutes Betsy returned, leading her little dry-eyed convert by the hand. They both took their seats and soon the learning experience was underway.

It is not always that easy for the educator in the correctional institution to persuade his pupils of the ultimate objective of the process. But it is, nonetheless, this realism that continues to cause the educator in the correctional institution to persist. For no matter what the "hang ups" of the inmate may be, if he ever expects to get out and start a new life, he had better begin to prepare immediately. It is the prospect and hope of fulfillment that stirs human reluctance in every situation. Where there is no hope, the best laid education program and plans fall flat on their face--and stay there!

A New World

The last twelve months of my life have provided a tremendous reaffirmation of hope for the human race, that has been nurtured over the years by my religious understanding and commitment. In January and February of 1971, I took a seven-week journey through the new nations of

Equatorial Africa. Africa is a massive continent three times the size of the United States and the largest piece of underpopulated geography on earth. Last summer, I visited Hungary and Bulgaria, two countries behind the so-called "Iron Curtain." Both of these nations are on the move.

A few days ago I returned from a twelve-day trip around the world. Beginning in Pittsburgh, my first stop was London; from London, in less than four hours on a BOAC flight, I landed in Moscow. For a period of four days we visited with the leadership of the Russian Orthodox Church. From Moscow we took a giant Russian Aeroflot to New Dehli, India, Bangkok, Thailand, and Singapore. From Singapore we took a New Zealand Airliner to Sidney, Australia, and eventually landed in Auckland, New Zealand. This was my temporary point of destination, where a meeting of the Executive Committee of the World Council of Churches was held. In less than a week I was in flight again, across the Pacific touching down in Honolulu and Los Angeles. From Los Angeles a TWA flight returned me to Pittsburgh on a cold snowy Saturday morning.

On each of the three voyages, though I was on business for the World Council of Churches and the Council of Bishops of The United Methodist Church, everywhere I took advantage of the opportunity to involve myself in the lifestyle of people and to talk to as many of them as possible. Such an excursion, within the period of twelve months, gives one a feeling for the world community, with fresh comparisons in mind.

Some Observations from the Family of Man

After twelve breathless months of travel, I am nursing at least four not completely digested observations which I would like to share with you. I share this with you, because I am convinced that all specific problems on this planet must henceforth be approached from an international point of view.

Motivation of Men

First, it is clear that the whole world is alive and kicking. By this I mean that there has never been such a simultaneous motivation of men on this planet in the whole history of the human race. Parts of the world have been awake during certain seasons of history, while the rest have been asleep or isolated from the mainstream of events. But today the whole planet of people is pulsating. Self-development and self-determination are the two top priorities among all the nations I have visited.

Interdependence

Secondly, there is a growing recognition of our interdependence as citizens in the earth. Presiden Nixon's journey to China can only be

explained in these terms. Here is a man whose political beginning was rooted in anti-Communism. He defeated Helen Gahagan Douglas of Southern California on the platform that she was soft toward Communism. Here is a political figure whose whole career has been spent in the conservative camp. Yet it is this same man, now President of the United States, who was allegedly convinced through a pingpong tournament that the Chinese Communists had something we needed; and, furthermore, stated in his homecoming speech, that each nation has a right to choose its own lifestyle.

On his return to the United Stated, in his first statement at Dulles Airport, he put educational-cultural exchange and trade with China at the top of the list of his accomplishments. New world markets and new resources are the keys to the development of nationhood, political, and economic competence in our time. Furthermore the Chinese have developed the scientific expertise to perfect a bomb and project it. In addition, they have one of the oldest continuous cultures on earth. And thirdly, in this nation one-fourth of the world's population resides. Looking up the road, the President's realism led him to understand that the United States could not isolate itself from this tremendous segment of the human community without eventually running the risk of strangulation.

A brotherhood which prophets and preachers pressed upon the human family as an act of choice, is being forced upon us now because of the new existential circumstance of the human community on this planet.

Freedom and Discipline

Thirdly, my travels have made clear to me that the struggle in the decades ahead will involve the reinterpretation of the balance between freedom and discipline in human society. Those countries which have chosen the Communist lifestyle, or have had it forced upon them, are severely disciplined. They have an interpretation of sin that is as clearly defined as the puritanical pietism of Jonathan Edwards. Anything that detracts from the efficiency and the effectiveness of the worker is sinful. The work ethic, which is the key to the self-development and self-determination of the nation, is the motivating factor in their system.

In the Communist countries, the people have social and economic security. Health care is guaranteed. Racial discrimination is forbidden. Poverty is against the law. Pornography, drunkenness, and social excesses are taboo. But the people are not free to criticize the regime. They cannot write or publish as they choose. The state owns and controls everything.

At least in Russia and the satellite countries, I visited, I saw no evidence of a classless society. In fact, there is escalation of social position and status based upon one's contribution to the society. But no one can become independently rich, and no one can slip below the poverty line.

In the free world, on the other hand, we can speak and act as we choose. But we are beginning to understand that freedom does not carry with it an irresponsible blank check. Certainly, the United States has demonstrated conclusively that the free society releases an almost unlimited resource in the expression of human capacities. But we are also aware that without the imposition of disciplines, irresponsible men mercilessly exploit their fellows, ravage the land, and use their position of power to restrict the freedom and opportunity of others. The history of Afro-Americans, the black Americans, in this nation is a glaring example of abridgements and abuses of an irresponsible but nominally "free society."

In the years ahead, I believe, the insistence of the freedom loving spirit of men will break through the oppressive yoke of Communist and Fascist authoritarian governments. But, likewise, I believe that those of us who live in democratic societies will of necessity impose disciplines upon ourselves to prevent individual and group anarchy, the ruthless exploitation of the defenseless and weak, and increase the basic social securities to all of our people.

Dr. Herbert Gans, sociology professor at Columbia University, in a recent article in the New York Times entitled, "The American Malise," points out that the aspirations of the average American--prior to World War II--have now become expectations. An aspiration is what one hopes for. An expectation is what one thinks he deserves. The redistribution and management of our national resources he argues, is a necessary next step in meeting the rising expectations of the American people.

Crime and Society. Most of the dissertations I have read on the subject of crime have associated the growing criminal patterns, prevalent in Western nations today, to our failure to deal realistically with the complications of our metropolitan-city type civilization, in which more and more of our people are directly dependent upon an economic system. The old land-based population in the United States, 90% of whom lived in rural areas at the turn of the century, has almost disappeared. Large farmers are in control of greater and greater holdings. More and more ex-farmers are seeking job opportunities in the cities because of their inability to compete in the farm economy. This, basically, develops a lifestyle which is dependent upon economic and social processes to guarantee the security and adequacy of the individual.

Most of the inmates in institutions come from cities. A disproportionate number of them are black. They are not inherently bad people. On the contrary, some of the finest people-potential in the nation is behind bars. As a pastor of local churches for over 25 years, I have come to understand and assist many of these ex-inmates in finding their way effectively back into society.

The case history of almost every inmate explains and describes the history of a social failure. Too frequently individual failure, in our kind of society, begins with the interposition of circumstances and

conditions beyond the complete control of the victim. Let me, however, assure you that I do not believe in the "no fault" concept of criminology. There is always a degree of responsibility which the individual must be made to bear. And while we work at improving the general conditions which will lead to rehabilitation, we cannot ignore completely individual responsibility where crime is involved. I, personally for instance, find it difficult to give my consent to the unilateral abolishment of capital punishment. Professional killers and assassins, as evident in the Yablonski, Kennedy, and King instances, simply cannot be given the absolute assurance that by taking the life of a fellow human being, they will not place their own in jeopardy.

The decision of the death penalty, in my judgment, should be settled in the courts and judged on the merits of the case. I know that the record will show that most of the individuals who suffer under the present capital punishment system are poor, lacking in adequate legal defense. This situation must be corrected. It can be corrected. However, a willful, professional killer, in my judgment, should not be granted an exemption from the death penalty in advance of his crime.

Radical Democracy

The fourth thing I have learned in my journeys is that the experiment in democratic living we are struggling with here in the United States is the only truly radical society on earth. Not everything about the United States of America is beautiful! Certainly, one of our uglier aspects is not only the increase in crime, but the acceptance of crime as normative. In fact, Dr. Gens points out that theft and burglary is regarded by some criminals as a free enterprise method of wealth distribution. Our real beauty is in our potential, and in the potential of the people. If by majority decision and due process we are able to succeed in blending a multi-racial, multi-cultural, conglomerate of human beings into a responsible society of persons where both the person and property of the individual is respected; and all of us together are willing to sacrifice for the common good--not only the good of our own nation, but all of our neighbors in the family of man--then we shall be in the process of accomplishing something no nation of our size and complexity has ever attempted previously on this planet!

For the salvation of our own souls and the rejuvenation of our hopes we must share this dream together. Otherwise, it will be impossible for people like ourselves to work faithfully and fruitfully at the difficult task of human and social rehabilitation that is before us.

The great virtue of the love ethic is that it is futuristic. Hate is always looking backward. Its style of living is founded upon the premise of revenge. Love, with its forgiving grace, lays aside its grievances and concentrates on remedies and reconciliation. The dream of peace and human fulfillment on this planet is dependent upon the saving influence of the love ethic. In 1972 this spells survival!

The New Man. In his current best seller, The Greening of America, Charles Reich makes this striking prophetic prediction:

> There is a revolution coming. It will not be like the revolutions of the past. It will originate with the individual . . . and it will change the political structure only as its final act. It will not require violence to succeed, and it cannot be successfully resisted by violence.
>
> It promises a higher reason, a more human community, a new liberated individual. Its ultimate creation will be a new and enduring wholeness and beauty, a renewed relationship of man to himself, to other men, to society, to nature and to the land.

Then he adds:

> At the heart of everything is what we shall call a change of consciousness . . . a new way of living . . . a new man. This is what the new generation has been searching for, and what it has started achieving.

What a fascinating aspiration. It is essentially a humanistic premise, but it is founded upon the hope that man--individual man--can and will be converted. The author calls this a "new consciousness." Certainly I share the basic thesis of Reich. But I do not believe his fundamental unit of change, the rejuvenated man, can be achieved through a purely human effort. Basically, it is inward spiritual renewal, a complete reorientation of the individual! It requires a new humility and the acceptance of an interpretation of the universe which postulates the existence of the ultimate sovereignty of a supreme purpose or a being, and a sense of responsibility to each individual in the family of man as set forth in the highest expression of Judeo-Christian faith.

The High Calling

We who are teachers, then, are engaged in the most significant task on earth. We are in the business of human redemption, of leading them to the doorstep of self-development, which may result in the real discovery of their identity as the children of a common father, and members of a common family.

The "next steps" in our calling cannot be approached as if we were involved in an isolated profession. The whole universe, literally, has to be taken into consideration before we can intelligently address ourselves to any aspect of our task. As difficult as it may seem, the rehabilitation of an inmate in the smallest correctional institution depends in part upon his vision of the larger view of the whole company of mankind outside the many prisons that confine him.

Specific Next Steps

Finally, let me suggest seven practical items which may only reaffirm what you already know. I do not consider myself a corrections specialist from an institutional point of view; but, in a larger sense, a minister is continually involved in directional, correctional, and rehabilitation education.

First, we need to work for a corrections system that encourages probationary rehabilitation rather than incarceration. In some communities, infractions of speed or traffic laws result in compulsory class attendance where one is subjected to educational procedures to make him a better driver and more law abiding citizen. This is a substitute for either fine or incarceration. This model sets an excellent precedent which could be extended to other kinds of crimes. This would mean that correctional officers in the field of education could work with men who have been guilty of legal infractions during evenings while they are still responsibly related to their jobs and their families. This would reduce the trauma of recycling that results when a man is separated from society by imprisonment and then has to make the returning readjustment.

Second, all of our educational procedures should be based upon the motivational premise of the re-emergence of the rehabilitated inmate into a society that will accept his skill and preparation without prejudice. This means that we must simultaneously work for a forgiving society willing to take the risk involved in human rehabilitation.

Third, bridges to industry must be constructed so that inmates may be specifically trained for employment in places where the employer is receptive and ready to utilize their services upon release.

Fourth, efforts must be increased to normalize relationships between the inmate's outside supportive family and friends so that the outward transition into society will be lubricated. This should include privacy and marital intimacy.

Fifth, correctional institution education curricula must be pupil-centered, beginning at the individual inmate level of readiness, building upon it achievement in the basic three R's, and moving on to proficiency in specific skills, so that the inmate returns to society better equipped than when he departed.

Sixth, sophisticated inmates should be provided the opportunity to take advantage of television courses of study beamed to general audiences. This will break the grip of prison vocabulary and routine, and will encourage a continuing identification with the outside world.

Finally, educational innovation is necessary to provide black inmates with a more comprehensive curriculum, including black studies, that will increase their self-identification and self-assurance. Nonetheless, every opportunity should be used to unify the inmate community through educational exchange and common learning experiences.

A Labor of Love

Lorraine Hansberry, in her Broadway hit Raisin in the Sun, deals with the difficult challenge to the sincerity and endurance of each of us. Beneatha is disgusted with her brother Travis because he has gambled away the meager life insurance benefits, bequeathed by their dead father. Beneatha disowns her brother calling him less than a man and characterizing him as a "toothless rat," and declares that he is unworthy of love. Then her mother offers this profound rebuttal:

> There is always something left to love. And if you ain't learned that, you ain't learned nothing. Have you cried for that boy today? I don't mean for yourself and for the family 'cause we lost the money. I mean for him...Child, when do you think is the time to love somebody the most; when they done good and made things easy for everybody? Well, then, you ain't through learning--because that ain't the time at all. It's when he's at his lowest and can't believe in his-self 'cause the world done whipped him so. When you starts measuring somebody, measure him right, child, measure him right. Make sure you done taken into account what hills and valleys he come through before he got to wherever he is.

Ours is undoubtedly a labor of love.

THE NEXT STEP

Morrison F. Warren
Arizona State University
Tempe, Arizona

Machiavelli is credited with saying, "There is nothing more difficult than to initiate a new order of things." Indeed, "a new order of things" is to succeed in preparing the educationally and socially deprived adult offender for assuming a useful, productive role in society. The most striking fact about the correctional apparatus today is that although the rehabilitation of criminals is presumably its major purpose, the custody of criminals is its major task. In my view, whether or not you--individually or collectively--commit yourselves to this new order of things is related to your knowledge and understanding of certain facts.

In preparation for this paper I requested young people to express their concerns about their ability to use the resources of society. These young people were between the ages of 15 and 20, many had entered the criminal justice system, some were black, some were white, some were Indian, some were Spanish-speaking. Their expressed concerns, paraphrased, could be summarized into four questions:

1. Why is our society racist in character? Where does the institution of law fit into the scheme of things?

2. Why does our society permit slums? Why does our society isolate the poor and prevent their involvement in stimulating and enriching educational experiences?

3. Why does our society permit hungry children?

4. Is it possible to effectively teach young people things their parents do not know?

These young people live and learn in a milieu; a milieu that is increasingly speaking to them about these concerns. Permit me to share with you some things young people are reading from their experiences.

Racism

They are saying: "We live in a racist society; a society with predictable sets of relationships between whites and non-whites, with positive valuations and prerogatives for whites and negative valuations and prerogatives for non-whites."

A number of facts reflect the consequences of this reality. First, according to the President's Crime Commission Report of 1967, in a random

sampling of 1,700 adults, 91 percent confessed that in their lifetime they had committed a crime for which they could have been incarcerated (The Challenge of Crime in a Free Society, 1967). When, according to the commission, 40 percent of all males in the United States will be arrested in their lifetimes, when one out of six adolescents will be referred to juvenile court, when juvenile delinquency is predicted to increase 70 percent from 1965 to 1975, and when only 2 percent of arrested criminals are imprisoned, one cannot help but wonder which side of the prison wall the criminal is to be found. Of that 2 percent who are imprisoned, one has to be impressed with the proportionally high percentage of minority Americans.

Second, the U. S. Department of Labor has shown that a black high school graduate has a greater chance of being unemployed than a white high school dropout. Third, at the very beginning of the criminal justice system, law enforcement policy is made by policemen. Policemen cannot and do not arrest all the offenders they encounter. A criminal code, in practice, is not a set of specific instructions to policemen, but more or less a rough map of the territory in which policemen work. How an individual policeman moves around that territory depends largely on his personal discretion. Therefore, every policeman, however complete or sketchy his education, is an interpreter of the law. Every policeman, too, is an arbiter of social values, for he meets situation after situation in which invoking criminal sanctions is a questionable line of action. Is it possible that in far too many cases negative feelings toward a minority group are factors in a decision?

The law making process is not a science, but grows from the philosophy of experience. Civil law took shape over the centuries according to problems brought to trial. These were the problems of those who could afford to hire attorneys. As a result, there have been few laws for the poor. The two forces that recently changed the situation were cases brought by the NAACP Legal Defense Fund and the funding of federally sponsored (Office of Economic Opportunity) legal services programs. The new pattern has produced a surprising development. The greatest offender against the poor proved not to be the private seller or the ghetto merchant, although these were problems, but the government on whom the poor depended for such things as police protection and welfare.

Slums and Education

They are saying: "Ghettos and barrios have been created not only by the successive waves of migrants, but also by the fear, ignorance, superstitions, arrogance, exploitation, and paradoxically, by the benevolence of the American society. The dweller of these areas is not inferior because he is black or Spanish-speaking, but because our American society has produced his inferiority. He has been refused employment, or when he is employed, he has been refused a decent wage, has been refused adequate housing and education and has been denied the equality of opportunity that has been available to all other citizens."

The Kerner Report (1968) supports this view:

> What white Americans have never fully understood--but what the Negro can never forget--is that white society is deeply implicated in the ghetto. White institutions created it, white institutions maintain it, and white society condones it (p. 2).

Society is failing slum youth. Their families are failing. The schools are failing. The social institutions generally relied on to guide and control people in their individual and mutual existence simply are not operating effectively in the inner city. Instead of turning out men and women who conform to the American norm, at least overtly, at least enough to stay out of jail, the slums are producing the highest rates of crime, vice and financial dependence. By failing these men and women, and most importantly, these young people, society wounds itself in many ways: the cost of crime, lives forfeited, personal injuries suffered, loss and destruction of property. But all of those together are less significant than the loss of individual initiative, of productivity, of a basis for pride in and a sense of participation in society. And whether or not society is tangibly injured by crime, inevitably it is diminished by the loss of a member's potential contribution.

The inner city is, for its present Negro inhabitants, more of a trap than a way station. It harbors not only physical deprivation and spiritual despair, but also doubt and downright cynicism about the relevance of the outside world's institutions and sincerity of efforts to close the gap. Far from ignoring or rejecting the goals and values espoused by more fortunate segments of society, the slum dweller wants the same material and intangible things for himself and his children. Indeed, the very similarity of his wishes sharpens the poignancy and frustration of felt discrepancies in opportunity for fulfillment of these wishes.

A collateral result of this isolation is reflected in prison populations. Every 10 years the Census lists the characteristics of persons in custodial institutions, including federal and state prisons and local jails and workhouses. These tabulations show the median years of school completed for the state and federal prison and reformatory population is 8.6 years, in contrast to 10.6 years for the general population in the country. It also shows that 23.9 percent of the offenders were laborers, compared to 5.1 percent in the total population. Only 5.8 percent of the offender population engaged in high status occupations, such as professional, technical work, manager, official, proprietor, and similar groupings compared to 20.6 percent of the general population (The Challenge of Crime in a Free Society, 1967, p. 45).

Hunger

They are saying: "There is a relationship between protein and brain damage, and society cannot justify anyone being hungry in the richest country in the world."

Parental Involvement

They are saying: "The views of his parents are not sought in his education nor do effective adult education programs exist."

Children enter the school system already shaped by their earlier experiences. Many of them are already handicapped in their potential for educational achievement. The educational handicaps that seem most closely related to delinquency appear in the slum child. He comes from a home in which books and other artifacts of intellectual accomplishment are rare. His parents, while they care about his education, are themselves too poorly schooled to give him the help and encouragement he needs. They have not had the time--even had they the knowledge--to teach him basic skills that are milestones painlessly passed by most middle-class youngsters: telling time, counting, saying the alphabet, learning colors, using crayons and paper and paint. He is unaccustomed to verbalizing concepts or ideas. Written communication may be rare in his experience. It is sometimes assumed that the parents of children in slum neighborhoods do not value education. In fact, there is persuasive evidence of their commitment to an adequate education for their children.

Conclusions

These are the kinds of concerns of young people in the ghettos. One can reasonably glean from these assertions a recognition of the concept of power and a plea for help. Data seem to show a constant theme: anger at discrimination, yet basic trust in America. Is it possible, in view of your position to view society totally, coupled with close interaction with "failures," to serve in a creative advocacy role with needed changes as a goal? I urge you to continually ask yourself, who should be included in the systems you seek to manage? I urge you not to become so programmed that you only deal with the variables immediately amenable to your control. You must include the multitude of voluntary organizations, educational institutions, and members at various levels of the power structure if you are to deal with the fundamental task of rehabilitation and prevention of criminality.

Are you willing to help teach society that:

- every citizen must familiarize himself with the problems of crime and the criminal justice system;
- slums must be eliminated;
- education must be improved;
- jobs must be found;
- equality of opportunity must become a reality;
- research programs regarding crime and justice must be developed;
- poverty must be eliminated;
- health delivery systems must be improved;
- government and the social order must justify credence, respect and loyalty.

The challenge to a program of adult basic education is not only to become more efficient, but more effective; not only to be more innovative, but more involved; and not only more curricular, but more compassionate. There are many reasons for you to be pessimistic about your task, but I challenge you with these words spoken by Victor Hugo nearly one-hundred years ago: "If a soul is left in darkness, sin will be committed. The guilty one is not he who commits the sin, but he who causes the darkness." I challenge you to light the darkness by initiating a new order of things.

References

Report of the national advisory committee on civil disorders. Washington: U. S. Government Printing Office, 1968.

The challenge of crime in a free society. Washington: U. S. Government Printing Office, 1967.

FOCUS ON THE FUTURE

John C. Snider
Department of Education
Colorado State University
Fort Collins, Colorado

This paper is based on two assumptions concerning professional leaders who are involved in adult basic education programming for correctional institutional settings. The first assumption is that adult basic education in corrections professional leaders are as well or better prepared in basic education programming than any other adult basic education leaders in the country, and the second assumption is that they are sincerely dedicated to the idea of changing behaviors of clients in order to make them capable for social productivity, economic efficiency, and self-realization.

I make these assumptions as a result of my experience in adult basic education in corrections, my experience in regular adult basic education programs, and the reading that I have done concerning adult basic education in corrections. With these assumptions in mind, I hope to challenge you by offering another dimension to the scope of your responsibilities as professional leaders. It is a dimension that may not be new at all, but perhaps one that can be expanded upon. This dimension can most properly be classified as a concept which I shall identify as "community-wide programming." In order to define this concept of "community-wide programming," I wish to discuss three facets of the concept: (a) its development in the 1960's, (b) its degree of operationalization today, and (c) techniques of delivering the idea of the concept to community leaders.

In the early 1960's America began realizing that it could no longer afford the luxury of having millions of its adult citizens so caught up in the toils of ignorance, poverty, and unemployment as not to be able to function as normal, productive, self-reliant citizens. It began to dawn on America that it could no longer disregard school dropouts, suppressed minority groups, and the mentally and physically handicapped.

Ideas for remedying these conditions had developed enough political clout by the mid-60's that they produced a myriad of programs during the Kennedy and Johnson administrations. Today, many of these programs have become known as Manpower Development and Training, CAP, Neighborhood Youth Corps, WIN, Model Cities, and Adult Basic Education. Most of these programs, with some funding modifications, were continued under the Nixon administration. Fortunately, the adult basic education program received year-by-year increases and was revised to serve a larger target population.

The progress of the adult basic education program as well as the other programs mentioned previously has been significant in some communities and obviously insignificant in others. Some communities have utilized these programs in order to develop their community resources

in positive directions; others have floundered in a mire of program duplication, competition, and unwise proliferation, thereby wasting valuable community resources. From a national point of view, it seems that some progress has been made by these many programs; however, the progress has been rather slow and the numbers of disadvantaged adults residing in this affluent society of ours are still large indeed. For example, it is estimated that there are still approximately 8 to 10 million of these disadvantaged adults who are illiterate or semi-illiterate who have not reached the eighth grade educational level.

At this point some serious questions can be raised about the whole cluster of anti-poverty and related programs. These questions are both strategic and philosophic in nature. For example, have our efforts segmented into too many different and grossly unrelated programs? Is the proliferation of these programs the cause of so many disadvantaged adults finding themselves in correctional institutions? Would it not be more effective and efficient to have fewer programs, have them better supported, and have them better coordinated so that they supplement and reinforce each other rather than have the fragmentation and competition which now exist?

The answers to these questions can be given a qualified YES in many communities around the country and a qualified NO in still others. It can be definitely concluded that the rapid-fire succession of new federal programs being administered through community agencies in the 1960's brought about a host of changes, some of which many communities were not prepared to handle, which brings us to the second facet of the concept of community-wide programming--its degree of operationalization today.

In a past issue of Reader's Digest, there is a human interest section entitled "Life in These United States." It relates a story that was submitted by an adult educator from Wisconsin. It seems he had a very civic-minded friend who was concerned about voter apathy in the community. So, his friend began to visit with various community groups and organizations in order to encourage voters to take advantage of the privilege of voting. When he heard that the high school adult education program drew a large cross section of the community, he decided to start his campaign there. He approached two middle-aged women and said, "Ladies, are you registered to vote?" "Heavens, no!" one of them responded. "We're registered for advanced needlepoint."

Evidences exist which are suggestive that similar kinds of confusion concerning basic education programs for adults are to be found in many of our communities today. Programming emphases at the community-wide level for people needing help are not achieving their potential for improving quality of living; hence one of the major causes, in my opinion, for the numerous incarcerated illiterates and semi-illiterates in correctional institutions today.

My assignment as a member of an adult basic education project titled "Project Communi-Link" which is headquartered at Colorado State University, calls for me, with other staff members, to visit state and local leaders

who are involved in basic education for adults (either directly or indirectly) in a nine-state area in this section of the country. Our task is to look at the communication linkages between and among the various basic education related agencies in the communities, and with the help of these leaders, and determine if our staff can be of any assistance in enhancing the existing linkage patterns. The objective being to expand communication linkages, thereby improving programs and ultimately fulfilling the basic education needs of adults.

Well, the experience has been most interesting, to say the least. We have visited communities where the public school adult basic education-General Education Development program is working beautifully with the Employment Service and the Welfare Office. These three agencies are communicating with the Home Economist of the Cooperative Extension Service as well as the Salvation Army and the vocational-technical school. The result: optimal use of resources or better fulfillment of basic education needs of adults. In other communities, the Employment Service manager, the adult basic education director, and the Nutrition Program director from Extension don't even know each other or at least won't communicate with each other. Needless to say, little is accomplished.

Although it is just a supposition, I really think that adult basic education in corrections is a symptom of the cause. That cause, as I stated earlier, is the inadequate communication linkages, or stated another way, the poor community-wide programming in basic education. Consequently, I feel justified on the basis of experience in saying that community-wide programming (even with the myriad of programs extant today) can, under a few given conditions, be achieved; and therefore, better fulfillment of basic education needs of adults is a realistic objective in the '70's.

Finally, the question of techniques of delivering the idea of the concept to community leaders comes to the forefront. One of the easiest and quickest is the technique used by the gentleman from Wisconsin who was concerned with voter apathy. As community leaders, you are members of many and various types of informal groups, clubs, and organizations in your communities and you have access to others. You can spread the word and apprise other leaders in your community of the idea. You can inform them of the advantages of optimal use of resources and at the same time show them that their autonomy will not be endangered. You'll still find those who are concerned with their advanced needlepoint, but nevertheless you'll find twice as many who will listen quite carefully.

A second technique which I find helpful in my work involves a delivery system classified as "simulation-gaming." One of the simulation-games is titled "Microville." "Microville" is a simulation-game that was developed by the Department of Adult Education at Florida State University during the 1969-70 academic year for the purpose of instructing adult educators in the program development processes, especially at the community-wide level. Although the device is still being field tested and is undergoing several modifications, it has already proved itself to be a functional instructional device that shows significant potential to

the field of adult education.

The simulation-game is designed as a verisimilar model representing the relevant aspects of a community which adult education leaders should utilize in order to develop optimal programs. Inside the simulation-game, the scenario of an average community is painted on the surfaces of the two shells to the extent that the low, low middle, middle, and upper class residential areas are represented, as well as the main institutions and agencies related (directly or indirectly) to the broad field of adult education. Institutions and agencies included are:

1. Public Health Center
2. Civil Defense
3. Military Base
4. Employment Office
5. Business
6. Bank
7. Museum
8. Jr. High School
9. Protestant Church
10. Chamber of Commerce
11. USO
12. TV and Radio
13. Factory
14. Labor Union
15. Elementary School 'one'
16. Catholic Church
17. Synogogue
18. High School
19. Gym and Dramatic Facility
20. Library
21. YMCA
22. Womens Civic Center
23. Elementary School 'two'
24. Professional Building
25. Board of Education
26. Community College
27. Medical Center
28. Cooperative Extension

At each residential area and at each agency or institution, data cards will be stored with the following information contained on them:

A. Residential Areas

1. Name

2. Age

3. Occupation

4. Formal Education

5. Hobbies and Group Memberships

6. Felt Needs and Interests

B. Agencies

1. Resource Data

2. Current Programs

Strategy cards were developed to employ specified operations at each laboratory learning session. The cards were written in a manner and style that would make the strategy of the simulation-game as fast moving as

reasonably possible. The cards are based upon "Cycles." The game is divided into a series of "cycles" which correspond to the key components and subcomponents of the instructional model. Each "cycle" is delineated on a strategy card via cycle objectives, instructions, guidelines, evaluation criteria, and content references. Strategy cards for each cycle are duplicated in sufficient quantities in order to allow each participant an individual card.

Cycle I: The entire group of participants is orientated to simulation-gaming in general.

Cycle II: Each council develops its own philosophy with accompanying policy statements.

Cycle III: Each council begins to analyze Microville in terms of community needs and wants.

Cycle IV: Each council writes the objectives for its community-wide program by taking into consideration its philosophy and policy and the needs and wants identified according to priorities.

Cycle V: Each council develops its community-wide program for implementation.

Cycle VI: Each council develops evaluative criteria that will serve as a measurement for the adequate achievement of program objectives.

It is hoped that "Microville" will add to the body of knowledge in adult education, not only in the area of program development processes but also in the area of instructional devices that can be utilized to facilitate greater learning. The desire of the designers of "Microville" was that it provide opportunities for developing imaginative "plans of action" which would maximize the effective use of resources in community-wide programming. Hopefully, this desire will be realized.

That's my message: its so very simple, but yet complex. It's optimistic--yet pessimistic. It says that illiteracy can be eliminated, yet many variables must be dealt with. It says that many communities are solving the problem; many others are not. Finally, it says that you as leaders with expertise in basic education are in an excellent position to do something about the cause of illiteracy and semi-illiteracy: you, through your leadership abilities, can help your community and others focus on the idea of community-wide programming, especially in basic education for adults.

DEVELOPING A PHILOSOPHY FOR ADULT BASIC EDUCATION IN CORRECTIONS

Arnold R. Sessions
Seattle Central Community College
Seattle, Washington

Introduction

Developing a philosophy for education in a correctional setting may sound as if it would be a formidable task, but it need not be if the problem is approached in a systematic fashion, starting with a definition and applying logic and reason to the definition. A philosophy is defined as, "an analysis of the grounds of and concepts expressing fundamental beliefs (Webster's Dictionary, 1967)." And Erickson (1970) stated that philosophy is made up of the "I believe's" of the individual or the "we believe's" of an organized group. So what is wanted by way of definition for a philosophy of adult basic education in corrections is an analysis of the grounds for establishing a set of "We believe's" for every institution and/or department within the institution.

Developing A Philosophy

Establishing a philosophy requires information for the establishment of a base upon which a philosophy can be built. We do not come fully equipped with sets of "we believe's" on every subject. Each individual must take in data from many sources expressing several points of view about a particular subject, subject that data to one's own biases for analysis, then pronounce a set of "I believe's" which is a philosophic statement.

A philosophy, if it is to serve its purpose, should be somewhat idealistic. Erickson (1970) put it well when he said, "The philosopher often lives in the world of the ideal, and fortunately for humanity, has often set forth ideas which make people keep reaching for that something just beyond present limits instead of sitting with folded hands." So an institution educational philosophy should be somewhat idealistic; it should strive to present a program toward which the department, the institution, and the instructors may have to strain in order to accomplish the philosophy's provisions.

Though a philosophy should strive for the ideal, too much idealism may well eliminate consideration of any suggestions made. So the idealism must be tempered by realism. The educational philosophy must be related to the institutional philosophy, the department of correction's philosophy, the department of institution's philosophy, and the legislative philosophy. Each level in the hierarchy of authority in corrections must respect the restrictions placed upon it by its superior authority.

However, it is not beyond the realm of possibility for the waves caused by idealism in the lower echelon to bring about a change in succeeding superior elevations.

As the philosophy of each level in the hierarchy of authority tempers the others in the vertical ladder, so must the philosophies of each department within an institution be related horizontally. This relatedness is necessary if trouble with a capital "T" is to be avoided. Since each department of a corrections institution is concerned with the same clientele--the offender--care should be taken that each be privy to the concerns of the others for that clientele. Not only must there be a relatedness between departmental philosophies, but members of other departments should serve on the committee which is given the responsibility for writing departmental and institutional philosophies.

Developing a philosophy for adult basic education in corrections for each institution requires the gathering of information about the philosophies in the hierarchy of authority in the correctional system, the philosophies of the institution and its departments, the philosophy of adult basic education as presented by the Congress, by educational groups, nationally and locally and most importantly, information about the personnel with which the institution education department will be working. Each bit of data gathered will contribute to the total picture of what is present as well as what is lacking in the field of correctional educational within the institution. When all the data has been gathered, analyzed, and synthesized, a statement of beliefs can be enunciated. This statement is the philosophy of the department. It will state what the department believes should take place with regard to the educational program for the institution. It should suggest priorities for participants, set standards, suggest long and short range goals for the institution, department, and participants, and create positive attitudes for all staff and offender personnel. In short, the philosophy should picture the utopian situation under the restrictions of the philosophies of the superior segments of the hierarchy of authority.

Conclusion

A philosophy is a statement of beliefs held by whomever is making the statement. A philosophy tends to be idealistic by stating what the issuer feels should be the case. A philosophy is a viable, living document which should change as conditions change, as new knowledge is obtained, or as goals are reached. A philosophy is used by comparing the philosophy with real life conditions. If there is a difference between the philosophy and real life, that difference becomes an assessed need. The enunciation of needs requires some action: positive, negative, or passive. Positive action would result in programs to satisfy the needs, either in part or in total. Negative action would be to abort. Passive action would be simply to maintain the status quo.

References

Erickson, R. A. Philosophy of adult basic education in corrections. In T. A. Ryan (Ed.), Collection of papers prepared for 1970 national seminars: Adult basic education in corrections. Honolulu: Education Research and Development Center, University of Hawaii, 1970.

Websters seventh new collegiate dictionary. Springfield, Massachusetts: G. & C. Merriam Company, Publishers, 1967.

DEVELOPING A PHILOSOPHY FOR ADULT BASIC EDUCATION IN CORRECTIONS

Jacquelen L. Smith
Federal Reformatory for Women
Alderson, West Virginia

Definition of Philosophy

Before one can begin to develop a philosophy one must have a rudimentary understanding of the word itself. World Book Encyclopedia (1971) states that:

> Philosophy has great value in our complicated world. Many persons have no real foundations or sets of beliefs. Philosophy can provide them with a reasoned framework within which to think. By accepting a particular philosophy, a person can begin to seek certain goals and to direct his life's behavior . . . . For example, a Stoic tries to remain master of his emotions . . . a Christian strives for salvation through the grace and teachings of Jesus Christ . . . each set of beliefs leads to a particular way of thinking and behaving.

In comparison, correctional educators must already have, or begin to develop, a set of beliefs which serves as a guide for all activities and curriculums. This set of beliefs can be defined as the philosophy of correctional education. To form or develop a philosophy of adult basic education in corrections one must be a careful investigator. A critical analysis of one's field is a necessary beginning but by no means is this analysis a final act. Thus a developed philosophy reaches no resolute truths.

> Philosophies change as men's cultural and social experience changes historically: there is no final interpretation of the meaning of life (Randall & Buchler, 1969).

Tools of Philosophy

To be an avid investigator one may use one or several tools. These tools are reason, faith, observation, and intuition. Reason is probably the chief instrument used by all philosophers. Another name for this method of inquiry is deductive reasoning. In other words, with any given statement one's task is to deduce other remarks. However, the real worth of this method depends upon the merit of the original statement.

Faith as a standard method of investigation may imply, according to Randall and Buchler (1969), "expectation that what has been found to be true in the past will continue to be favored by evidence in the future (p. 49);" or tenaciously holding on to beliefs that one has in

spite of all new facts or faith in a belief because of the lack of evidence. Thus we have faith in three distinct senses, "belief in spite of evidence, in the absence of evidence or on account of evidence (Randall & Buchler, 1969, p. 49)."

A third method in inquiry is observation. Another term for this method is inductive reasoning. In brief, "this is reasoning from a limited number of observations to a conclusion that goes beyond any finite number of observations (Randall & Buchler, 1969, p. 70)."

Intuition, the last tool of philosophers is perhaps the most elusive. Intuition is the license to understand something without using reasoning or tests. Yet all of us at times believe certain truths because they seem to generate their own truth.

With this cursory yet necessary touch upon the tools of philosophers, it is time to pursue how one develops a philosophy for adult basic education in correctional settings. Perhaps some tools of inquiry may be used more than others, but probably all will be used to some degree in developing a sound philosophy for any particular institution.

General Corrections Philosophy

Before one can present an adequate, specific philosophy for a correctional institution or an adult basic education in corrections philosophy, there is a need to form a philosophy for the broad field of corrections. This philosophy should map the direction in which most penologists, whether guards, educators or supervisors, are working. Thus, a simply stated philosophy might be as Mittman (1970) states, "Our dominant aim must not be to punish or to see justice done, but to return the offender to society as a useful participant (p. 10)." This statement lends direction or states a belief which most penologists should agree to and abide. If not, perhaps corrections is not the field in which one should be working.

Specific Correctional Philosophies for Institutions

Next it is important to understand how one's specific correctional institution's philosophy might differ from another institution's philosophy. For example, the Air Force Prisoner Retraining Program's philosophy may differ from another correctional facility. Kennedy (1970), Chief of the Analysis Division, says "stress is placed on individual dignity, self-worth, internalized controls, and self-determination (p. 40)." These are the set of beliefs that his institution puts out in front. They (Air Force) contend that treatment, not punishment, should receive the major emphasis. They also contend that this philosophy can be used by any other penal setting.

It is important to understand the broad philosophy of corrections and the specific institution's philosophy on corrections in order to

be certain that your institution's adult basic education in corrections philosophy is congruent with them. Correctional education must be a part of the correctional program but it must be realized that it is not the total program. Henderson (1970) states:

> Correctional educators realize that whatever they do in education whether academic or vocational, or social, must be geared to the rest of the existing programs. We must work with the other programs hand in hand. There has to be a teamwork situation if we are ever going to realize the rehabilitation goals we have set for ourselves (p. 21).

Nevertheless, it is important that we understand and can delineate the needs of the offender within our correctional settings. One must be able to assess the social, cultural and value elements which are absent from the offender's background, and be able to relate these needs to one's belief about education and corrections. Only when the offender has been thoroughly explored, and education and corrections related to him, can an adequate philosophy on adult basic education in corrections be developed.

The Offender

Reams of material could be written about the offender and commonalities of personality which are indigenous to the offender. Perhaps he may be a disadvantaged youth from the ghetto who displays a paucity of self-worth or respect for himself. It will be necessary to improve that self-image before a change in behavior can be expected. Sociologists call this lack of self-worth a negative self-concept. Clendenen (1971) states:

> This self-image plays its part in requiring and supporting a sub-culture which values toughness, doing others before they do, and justifies both crime and failure. If this be true, one objective of corrections should be to help the delinquent feel better about himself and to improve his self-image (p. 9).

A close look at most inmates' profiles will show them to be remiss in having obtained an adequate education. Many have dropped or been forced out of school for any number of reasons: lack of proper clothing, pregnancy, delinquency, truancy. An analysis of the public offender in the state of Alaska showed that 16.6 percent received a high school diploma, that only 23 percent completed the 7th grade and some 45 percent went only to the 8th grade (Williams, 1970, p. 605).

Regardless of the lack of education which has contributed to an individual's incarceration, we must find new ways to improve the inmate's role in accepting responsibility. The resident is given little esteem with his low paying job and no designated authority. Thus, according to Clendenen (1971), "what is needed is a method or format which would enable the inmate to control impulsive, aggressive behavior within the

context of an experience which also is rewarding. And the kind of situation required to achieve these goals can be structured (p. 11)." One such example of inmates accepting responsibility and making decisions about their life would be active involvement in developing and working toward educational goals. Likewise, inmates may be given the freedom to speak their thoughts in extracurricular activities such as video-tape productions of debates, discussions, and/or therapy.

Many offenders must also be looked at from a mental health point of view. Mental health has been defined by Philip O. Roche, M. D. (1965) as a:

> description of a process in which an individual maintains a balance and individual integrity at some level through various devices of coping with stress induced in combination by environmental conditions and by internal patterns which are shaped by formative experiences (p. 7).

All correctional persons must be aware that many offenders have bad child rearing experiences in common with the mentally ill. This makes the offender somewhat less capable of meeting the stresses which go along with adulthood. The offender is prone to repeat devices that worked as children and according to Roche (1965), "such persons tend to remain fixed at levels of adaptive efforts in keeping with those of children (p. 7)." Although the preceding is certainly not descriptive of all people incarcerated in prisons it must be recognized in many offenders. Likewise it must be recognized that many offenders entering today's institutions are a new breed of criminal; they are often sophisticated and well-educated. Among these, one finds the militants, the college students who have used or pushed drugs, and the civil rights protagonists.

Consequently one can see that the offender may have many ramifications to his personality. Nonetheless, the offender must be the chief concern for anyone who is setting up a philosophy of adult basic education in corrections. After one has carefully looked at the population (offender) within one's institution, it will be much easier to develop a set of beliefs about the type of corrections and the types of education needed for such offenders.

Education

Adult education within a correctional institution must first of all suit the needs of offenders. In other words, the curriculum must be in harmony with the personality. Knowles (1970) states that, "The primary and immediate mission of every adult educator is to help individuals satisfy their needs and achieve their goals (p. 23)." This may be somewhat different for offenders than non-offenders if one perceives their needs as being different. Nonetheless, all adult education should be perceived as a continuing process. John Gardner relates in his book, Self Renewal, about an on-going process of education. Thus education is not a compilation of facts within one's mind, but the acquisition of knowledge which will help one continue learning under self-direction.

Adult education must help the individual develop to his fullest potential. Gardner (1968) informs us "that all education worthy of the name enhances the individual. It heightens awareness, or deepens understanding, or enlarges one's powers, or introduces one to new modes of appreciation and enjoyment. It is a means of self-discovery (p. 73)."

Corrections

The preceding two topics of offender and education must be related to the total field of corrections, or perhaps more appropriately, corrections must always be related to education of the offender. One penologist, Leffler (1968), has stated that "The prison must become a school . . . a school in which the residents, through their daily associations with staff at every level, can come to understand what it means to be a human being (p. 30)."

Summary

After one has drawn together an analysis on offenders, education, and corrections, it is time to develop an instructional philosophy. What sets of beliefs should one be concerned with in developing an instructional philosophy in corrections? Once again one must know the offenders within one's classroom setting. One must be aware of the deficiencies within one's complement of students and what method of instruction and/or kinds of materials best relate or convey knowledge to the learner.

Knowles (1970) presents five functions of adult educators who work with adult learners. These five functions are the diagnostic function, the planning function, the motivational function, the methodological function, the resource function and the evaluative function. All of these areas must be surveyed if one is to set up a sound instructional philosophy.

The diagnostic function means that the educator must assist the learners in analyzing their needs for a particular knowledge in a specific situation. The planning situation denotes that the educator must organize with the students a set of events that will produce needed knowledge. In the motivational function, the educator must set up an environment which will inspire a person to learn. Another function of the educator is to choose the best methods or techniques for inducing learning. The resource function is a function whereby the educator provides materials and human potential to provoke learning. Lastly the evaluative function of educators is a process whereby learners are helped to assess the merits of learning experiences (Knowles, 1968, p. 22).

This instructional philosophy, as with any philosophy or set of beliefs, can be reached by using the tools of investigation; reasoning, faith, intuition, and observation. Once an investigation is completed it is necessary to draw up the ideal situation. After this assessment

is made then the ideal situation is compared to the real life setting. The differences between the two give one the needs. For example, if a philosophy of instructional philosophy states that an offender of American Indian heritage needs to have an Indian culture room to best motivate him toward learning American history, and there is no room which displays his culture, then this is an assessed need. All needs can be assessed by comparing the ideal to the real life environment.

References

Clendenen, R. What's the matter with corrections? Federal Probation, 1971, 35, 8-12.

Gardner, J. No easy victories. New York: Harper & Row, 1968.

Henderson, R. The correction officer and the educational program. American Journal of Correction, 1970, 32, 18-21.

Kennedy, F. The United States air force prisoner retraining program. Federal Probation, 1970, 34, 39-46.

Knowles, M. The modern practice of adult education. New York: Association Press, 1970.

Leffler, W. On being human in the prison community. Federal Probation, 1968, 32, 30.

Mittman, H. Punishment and discipline in prisons. The American Journal of Correction, 1970, 32, 10-17.

Randall, J., Jr., & Buchler, J. Philosophy: An introduction. New York: Barnes and Noble, 1969.

Roche, P. Mental health and criminal behavior. Federal Probation, 1965, 29, 7-9.

Williams, N. An innovative testing program in correctional institutions. In. T. A. Ryan (Ed.), Collection of papers prepared for 1970 national seminars. Honolulu: Education Research and Development Center, University of Hawaii, 1972.

World book encyclopedia (Vol. 15). Chicago: Field Enterprises Educational Corporation, 1970.

MAKING A PHILOSOPHY WORK FOR YOU

John W. Jakasha
Montana State Prison
Deer Lodge, Montana

Our nation is presently faced with a condition of increased crime and violence. At the same time we are hearing cries for prison reform. Vast amounts of money, both state and federal, have been expended to remove these conditions. Experts have been consulted in a search for the answers, yet these same conditions seem to be on the increase.

Considering all that has been accomplished, there is evidence that our nation is truly concerned with the problems with which we are faced. Many times good, sound projects have ended as statistics developed on paper, while in reality the basic problems of the incarcerated still remain. There must be a solution to this condition, and although we hear cries for increased money funding, this is not the total answer. Great strides in prison reform can be performed immediately and without a single cent of added expenditure.

Reform is necessary. Change can bring about decreased recidivism, but before effective change can take place, some basic conditions of operation must improve. This paper will advocate improvement in corrections without spending an additional dollar, as its stress will be on the part that a sound philosophy plays in project effectiveness. It will also contend that the lack of recognition of a sound philosophy will lead to failure in the basic problems that corrections face today.

It is appropriate to state the definition of the term philosophy. As taken from Webster's Dictionary, those attributes which apply are: a pursuit of wisdom; a search for truth through logical reasoning rather than factual observation; an analysis of the grounds of and concepts expressing fundamental beliefs; a theory underlying or regarding a sphere of activity or thought; and the beliefs, concepts, and attitudes of an individual or group. Re-examine this statement. Too often a philosophy is taken for granted.

Every person has a philosophy; every group has a philosophy. It may be written; it may be stated verbally; or it may be merely a set of ideas. Philosophies are dealt with everyday, everywhere, by everyone. Conflicts arise because of friction that develops from opposing philosophies.

Let us now take a look at the first conflict which correctional reform faces, conflict of class ideals. Every institution operates with a philosophy that has been developed by a governmental agency. This philosophy will more than likely reflect middle class values and standards. This is inevitable, since the middle class society is considered the majority and is most likely to have an effect on our law-making body. Yet it is usually conflict with these same middle class laws and ideals

that cause a person to become an offender and make corrections a necessity.

The offender, also has a philosophy, one that the individual has lived with everyday of his life. This philosophy is most likely contradictory to the law-making body, and will most likely be in conflict with the philosophies stated for a correctional institution.

The job of a correctional institution then becomes the task of changing the philosophy of the offender. We must somehow prove to him that other ideals are preferable, and hopefully, in time, we will convert the offender's view to something which more closely resembles that of the people whose ideals he has had conflict with. This will be a difficult task and needs the total cooperation of institutional staff. Good but weakly stressed departmental or institutional philosophies will not replace those that are so strongly developed at this point by the offender.

Think for a minute and determine in your own mind how difficult this will be. Who cares about your ideals? Did the offender have the same opportunity for success as you had? Did the offender have the same love and understanding that you have had? Did the offender have the same educational opportunities as we have had? Yes, we can go on and on asking questions such as this. The point is, no one truly knows all the experiences another person has had, and because of this, changing the ideals of another person is difficult. The challenge can be effectively met only if all personnel dealing with the offender function in a truly dedicated manner and if negative attitudes do not exist.

I am well aware that correctional people, for the most part, are dedicated people--if this were not true, some of the success which has been shown could not have occurred. But, let us look at some of the factors which undermine the fine jobs that are being attempted.

How many times have you heard that an individual feels comfortable doing his work? If the man is truly comfortable, he has probably stopped innovating. We in corrections must always be alert for improved methods to affect our ideals.

An additional undermining element is staff attitude when dealing with the incarcerated. I am thinking of the attitude that some staff members have in dealing with inmates' problems. How many times have you heard an employee say, "Oh let the teacher worry about it, or the counselor," or who ever seems to be handy at the time? I wonder if it ever occurred to those making such statements that maybe the inmate needs help and attention from that particular employee, not others whom he probably has already seen. To effect a project takes a total committment of all persons employed in the operation of the correctional facility and not merely segregated groups functioning for specific purposes. It might be surprising the benefit that could be derived from out total working force.

Think of the times that people were called upon to help but were too busy. Problem situations require positive action, and passing over them lightly will not promote change in troubled individuals. Another aspect

undermining a sound philosophy is the person who will listen to an inmate's problems and then fear to respond truthfully in order to avoid involvement. Problems must be faced head on, and if the truth hurts then steps should be taken to correct the situation.

One condition which has been noted and is rather disturbing is the statement which suggests that inmates should not be subjected to middle class ideals. I ask this question, "Will our people be released to some form of utopia where the conditions and problems that our nation is faced with today do not exist?" I'm afraid the answer is no. Upon release the offender will again come in contact with the same problems, the same conditions, and in addition he will be burdened with the weight of being called an "ex-con."

It becomes our job then not to create a utopia, but rather to create an environment which more closely resembles real life. It becomes our job to show the offender what conditions will be like and how to perform under these conditions. Our prisons of the past, which were oriented to custody control and time consuming chores, were not the answer to correcting conditions of social incompatibility. Creating a utopia will not solve the problem either. New educational and vocational opportunities should be developed, and great reliance should be placed upon the wealth of aid that can be derived from these opportunities. However, each inmate should be oriented to the fact that his keep should be partially repaid through the maintenance and self-supporting functions of the institution. Much in the way of responsibility training can be accomplished by this means.

Reform in corrections will not occur by playing the word game. Changing a prison to a penal institution, to a correctional center, to a forestry camp or whatever will not change ideals. Incarceration occurs as a result of attitudes and behaviors. Lack of education, lack of employment, or lack of employable skills are definite contributors to antisocial behavior.

From the few ideas that have been presented in this paper, we can see that change can occur whether additional funds become available or not. It is necessary, of course, that each department within an institution develop a written philosophy. This philosophy should be established to take care of the department's needs as well as the inmates' needs. It should be flexible enough to allow the use of resources that are available through other departments, and likewise it should allow other departments to use the resources available within the department. Departmental co-operation will insure a sound foundation for the resocialization of the incarcerated individual.

When new programs are conceived, be specific about what they will accomplish. Plan ahead and strive for achievement well above what the funds will presently buy. Determine a philosophy to warrant and achieve those goals, and then make every attempt to stay with this philosophy. In addition, make plans to orient other staff members to become aware of the department's philosophy, without their co-operation, negative elements may well destroy your program, regardless of the fact that it

appeared to be successful on paper.

Education is a tool provided for future development. But without a change in the offender's philosophy, the inmate will be no more self-sufficient if he has a college degree or a highly skilled profession than before. The offender needs understanding and guidance from those with whom he comes in contact during his incarceration.

Once the offender is released there will be few who will have the patience for such understanding and guidance. This, too, is a fact which is too often kept a secret, although the offender is usually aware of the condition. Teaching the inmate ways to cope with this situation is just as important as it is to instruct in mathematics or develop some job skill.

Let us all look to improving the relationship between the total staff and the inmate. Everyone needs advice and suggestions, so insure that no inmate will be turned away when in need of help. And guarantee that philosophies will produce. This will not cost a cent but will eventually bring great returns.

REDIRECTION IN CORRECTIONS

Gervase Brinkman
Illinois State Penitentiary
Joliet, Illinois

The title of this paper is Redirection in Corrections. I wish I could somehow present a comprehensive plan - new, not too difficult to implement, and revolutionary in its results. I wish - that's what philosophers call a desiderium non efficax, which in English is translated "a pipe dream." You will struggle with your plans for improved and correctionally effective education. Then you will return to your institutions to find that these plans, laboriously conceived and perfected, must cut through reams of red tape, scale mountains of administrative obstacles, swim through rivers of professional and inmate apathy before even a fraction of them can become reality. It has ever been so in this field of corrections.

Educational objectives have already been written. Obstacles have already been explored. Let me give you one sample:

Objectives of Correctional Education. The principle objectives are to:

1. Establish skills and work habits designed to produce the necessities of life for the individual and his family.

2. Build moral stamina to help the man live according to accepted social standards.

3. Teach body care through health, hygiene, recreation, and physical education courses.

4. Develop art skills for leisure time activities.

5. Inculate in the man an appreciation of the finer things in life.

6. Build a complete adult education learning center to carry men through high school.

7. Establish rapport with neighboring colleges to bring higher education to men qualified for further training.

Meeting problems. Problems which must be solved to achieve these objectives are:

1. Securing the full cooperation of the employee group as a whole in carrying out the training program.

2. Employment of competent instructors.

3. Allocation of an adequate budget to the educational program.

4. Determining the educational needs of the individual inmate.

5. Securing inmate interest in the educational program.

6. Placing the inmate on parole in the trade for which we have trained him.

7. Research results constantly.

Do you know when this was written? It is excerpted mainly from a talk given before the Congress of Corrections by Alan Cooke, then working in the California system. The place was Boston, Massachusetts. The year was 1948. Twenty-four years later the problems are still the same and the objectives still unachieved.

Suddenly I begin to realize that it is not my task to implement a correctional curriculum. You're the experts in that and it is distinctly beyond my province. My position, as I see it, is to stress the attitudes which correctional educators must have in approaching their work so that objectives may not be forgotten and problems may be solved. These attitudes may be considered under three headings: 1. attitudes in dealing with the system; 2. attitudes in dealing with the men for whom the system is being implemented; and 3. as an epilogue, an attitude in dealing with yourself.

Attitudes in Dealing With the System

Don't Succumb Completely to the Weight of Tradition

I present this to you as a danger. A correctional educator or administrator can walk into an institution with goals which are very high and objectives which to him seem completely reasonable. He is met with the entire set-up of custody, of routine, of tight scheduling, of industrial demands, of apathy toward the program both on the part of the professionals and of the inmates. He begins to see his dreams fold up one by one and the danger is that like Sennacharib, he will quietly fold his tents and silently move away from the dreams that he has entertained and content himself with doing exactly what has been done for 50 years before. The procedure (and I have seen it happen over the years) reminds me of a poem written by a gentleman who has given us several thought-provoking poetic essays. I refer to Sam Walter Foss (1858-1911) and to the poem he calls the Calf Path:

CALF PATH

ONE day, through the primeval wood,
A calf walked home, as good calves should;
But made a trail all bent askew,
A crooked trail as all calves do.

Since then two hundred years have fled,
And, I infer, the calf is dead.
But still he left behind his trail,
And thereby hangs my moral tale.

The trail was taken up next day
But a lone dog that passed that way;
And then a wise bell-wether sheep
Pursued the trail o'er vale and steep,
And drew the flock behind him, too,
As good bell-wethers do.

And from that day, o'er hill and glade,
Through those old woods a path was made;
And many men would in and out,
And dodged, and turned, and bent about
And uttered words of righteous wrath
Because 'twas such a crooked path.

But still they followed, do not laugh -
The first migrations of that calf,
And through this winding wood-way stalked,
Because he wobbled when he walked.

This forest path became a lane,
That bent and turned, and turned again;
This crooked lane became a road,
Where many a poor horse with his load,
Toiled on beneath the burning sun,
And traveled some three miles in one.
And thus a century and a half
They trod the footsteps of that calf.

Each day a hundred thousand rout
Followed that zig zag calf about;
And o'er his crooked journey went
The traffic of a continent.
A hundred thousand men were led
By one calf near three centuries dead.
They followed still his crooked way
And lost one hundred years a day;
For thus such reverance is lent
To well-established precedent.

A moral lesson this might teach,
Were I ordained and called to preach;
For men are prone to go it blind
Along the calf-paths of the mind,
And work away from sun to sun
To do what other men have done.

They followed in the beaten track,
And out and in, and forth and back,
And still their devious course pursue,
To keep the path that others do.

But how the wise old wood-gods laugh,
Who saw the first primeval calf!
Ah! Many things this tale might teach,
But I am not ordained to preach...

And even though ordained, it seems foolish to belabor the obvious.

Nova sint omnia Syndrome

While you should not succumb too completely to tradition, the opposite extreme should also be avoided - do not succumb to the nova sint omnia syndrome. In your examination and acceptance of an educational system eliminate those areas which seem to have lost relevance but at the same time judiciously hold on to others as being applicable in our present time. I admire St. Luke as one of the more perceptive Evangelists and in the 24th chapter of his gospel he tells the story of the two discipline who, after the crucifixion of Christ, were making their way to a village called Emmaus. On the way, as they were discussing very animatedly the events of the past days, the Lord appeared and walked along with them. He asked them the subject of their lively discussion.

> They halted, in distress and one of them, Cleopas by name, asked Him: "Are you the only resident of Jerusalem who does not know the things that went on there these past few days?" He said to them: "What things?" They said: "All those that had to do with Jesus of Nazareth, a prophet powerful in word and deed in the eyes of God and all the people; how our chief priests and leaders delivered Him up to be condemned to death, and crucified Him. We were hoping that He was the one who would set Israel free. Besides all this, today, the third day since these things happened, some women of our group have just brought us some astonishing news. They were at the tomb before dawn and failed to find His body, but returned with the tale that they had seen a vision of angels who declared that He was alive. Some of our number went to the tomb and found it to be just as the women said, but Him they did not see.
>
> Then Jesus said to them: "What little sense you have! How slow you are to believe all that the prophets have announced.

Did not the Messiah have to undergo all this so as to enter into His glory?" Beginning then with Moses and all the prophets, He interpreted for them every passage of Scripture which referred to Him.

I call your attention to this particular journalistic account to indicate one point. The Jewish writings contain many teachings: liturgy, ritual observances, history, genealogies, prophecies, songs, advice on many things, laws, prayers. The disciples found it impossible to separate the prophetic utterances from the other utterances found in the Old Testament. Christ did this for them and they understood. His remark addressed to the two disciples may well find echo in our consideration of the educational scene in corrections: "What little sense you have." Educators find a system which seems to be a hodge-podge of many unrelated parts and in their frustration would like to throw it all out and start anew to change the entire system. Don't! That way lies greater frustration because the system will overwhelm you. But within the system take those elements which seem to you particularly applicable, stress them, reinforce them, and gradually push them against the walls of varied restraint. You will find that in this gradual process, other disciplines will begin to appreciate the work you are doing and gradually the walls begin to spread out a little bit farther and progress will be made.

Be Prepared to Travel Light

People are more important than equipment. Corrections notoriously cuts treatment budgets--education, vocational training, and so forth. We realize this as a fact of life. On the other hand, we are told, an educational system needs money and a lot of it. I maintain that a lack of money should never be used as an excuse for inferior performance. When it is done, it is a confession of a lack of dedicated professionalism.

I recall a meeting between a group of residents, a group of educators, and a group of chaplains. The meeting was scheduled to discuss mutual interest and cooperation. Within two or three minutes, it lost meaning because one participant said in anger: "I know we have a rotten educational system. But don't blame us. Blame the people up front who won't give us the money to have a good one." The meeting deteriorated and the resident leaders walked out, disappointment in their eyes, puzzled and disheartened with an individual who said: "Unless I get a lot more money, I am not going to give you a better education."

In contrast, one of the good programs at the institution in which I serve is being conducted by a Registered Nurse with experience in nursing education. Designed as a 26-week course, it features weekly films, class work with definite lesson plans, weekly examinations and a rigid system of control to detect and eliminate those not interested or not willing to work. When the program was presented for approval the nurse was asked how much it would cost. "I have that all figured out," was the response, "And I am worried because it will cost pretty much and I don't know how to get the money." She presented the cost breakdown.

The entire course is to cost just $150.00! Needless to say, she has the money. It seems a perfect example or traveling light-- and being effective.

Attitudes in Dealing With the Man

Don't be a Racist

Many of us will say: "I am not a racist. I try to give everybody his due. I try to treat everybody, not equally, but according to his specific needs and aspirations." Do you?

George Clements was a featured speaker at the 1971 Midwest meeting of the American Correctional Chaplains' Association. George is a black Catholic priest, pastor of the largest black parish in the city of Chicago, running what has been called the finest educational grade school plant in all of black America. He began his talk in this fashion:

> I really do not know why I, a black man, am talking to you, predominantly a group of white clergymen. I realize you have espoused the highest ideals. I realize you work probably harder than any other group of people to vitalize the doctrine of Christ that we should love one another as individuals without paying attention to accidental differences. Yet, I say to you, every single one of you is a racist. You are white racists. I say to you that I am a racist, a black racist and I think this is true of practically every white man and every black man in this country.

It is a sweeping indictment which I would like to disown but at the same time I think there is truth in it and every single one of us must ask ourselves the question day after day and contact after contact: "Did I deal with this man in this way because he is black or he is brown or he is red or did I treat him exactly the same with exactly the same courtesy as I would treat one of my own color."

At the board meeting of the American Correctional Association held in Omaha several months ago it was decided that the Congress of Correction this year would deal with topics shared by the entire Association and all the affiliates. One entire day was spent in determining the topics of greatest importance in the field of corrections. I submit that list and call your attention to what is considered topic number one in importance by correctional administrators:

1. Racial issues in corrections
2. Violence
3. Rights of people
4. Community-based programs

5. The drug scene

6. Communications in the criminal justice system

7. Relationships of mass media to corrections

8. Inmate welfare

9. Probation and parole

10. Constructive custody and control (offender rate in corrections)

11. Education for corrections (Correctional careers)

12. Correctional response to outside reform

13. Research and evaluation

14. Architectual innovations

15. Fund raising techniques in corrections

16. Major administrative trends

Don't be a Megalomaniac

This advice may seem ridiculous. Superfluous for people who have definitely shown their dedication. Couldn't they get better paying jobs in some other field? Have they not shown the highest regard for the personal dignity of the men for whom they are working? Otherwise they would never be in such a position--often unrewarding, sometimes dangerous. Yet, it is advice given very seriously. In the orientation programs given to new officers in the Illinois system, this point is one which finds frequent mention.

Prisons actually contribute to a warped sense of our personal worth as compared to our evaluation of the worth of the residents. When work must be done, we order it done but it is the resident who does it. If we throw a cigarette butt down on the pavement, we are not the ones to pick it up, a resident does. If a package is carried from one section of the compound to another, you will see an officer walking along beside an inmate who is carrying the package. When the men return to their cells, they look from behind bars to face an officer who has freedom of movement. In so many ways--architecture, routine, work--the impression is given and may become a part of the correctional worker's psyche, that the man who is a prisoner is somehow inferior to the man who is an officer or an educator or warden.

Jules Romains in his Verdun: Men of Good Will writes of this as a universal tendency:

Delicacy of Feeling

I sometimes find myself wondering,
in a sudden panic,
whether I'm not in the way of developing
numb patches in my sensibility
of which I shall never be cured -

Delicacy of feeling.
What a wonderful expression!
Shall I ever again know
what delicacy of feeling is?

I may be nervous, irritable,
exasperated by trifles,
but shall I ever recover that sensitiveness
which is the mark of the civilized
and mature person?

I sometimes see myself in the future
transformed into a sort of invalid
who has suffered an amputation
of all his delicate sentiments,
like a man who has lost all his fingers
and can only feel things
with a couple of stumps.

There are a million like that.

If true in all strata of society, what a danger it is in the abnormal environment of a prisoner. May I draw a chart for you? It is one used in orientation programs and the questions go like this: "Who is the most important person in this prison?" "Who is next in importance?" The chart of answers usually given has this appearance:

Warden
Assistant Wardens
Captains
Lieutenants
Sergeants
Officers
Residents

The point is then made that this is indeed the ladder of authority but definitely not the ladder of importance. To demonstrate importance we must put handles on this ladder and then completely reverse it so that it look like this:

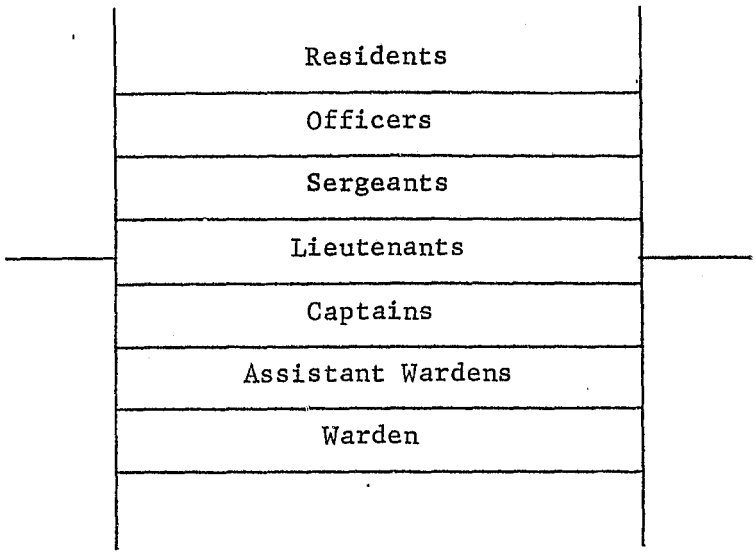

The resident is the most important person in the institution. The officers are there to serve the functions of society in helping the resident, the sergeants exist to coordinate the efforts of the officers. And the warden is there only to serve as a coordinating and catalytic agent to make all services of the institution viable. And so the question: Should servants be megalomaniacs?

Consider the Self-concept of the Resident

Consider the self-concept these men have and work from that basis. As good management books say: "It is important to note that the self-concept of the individual worker is ignored at the organization's peril." We might say the same of correctional education. Let me quote briefly from a book: Motivation and Productivity, written by Saul W. Gellerman, a book which won the McKinsey Foundation Award for excellence in management literature. On pages 186 and 187 Mr. Gellerman develops the idea of self-concept:

> How do self-concepts grow? . . .
>
> The self-concept is really a social concept and other people are the standards against which the emerging "self" is measured and defined. Thus ideas of superiority, equality, and inferiority appear as the child encounters other people and seeks a consistent set of guidelines to follow in dealing with them. He discovers what kinds he cannot do well in. Competence begets confidence and vice-versa; a sort of chain reaction is established which leads to a more or less consistent level of self-assurance (or timidity, as the case may

be) which may last a lifetime . . . . However talents do not blossom forth automatically into an appropriate sense of competence. For, in addition to acquiring a relative sense of how well he can do things, a person also acquires a relative sense of what he deserves. In childhood, a sense of self-worth is not achieved but conferred; it is the attitudes of other people (especially his parents) that tell the child how much of an intrinsic claim he has on the attention and indulgence of others. The degree to which a child is made to feel welcome or unwelcome, valued or worthless, has a great deal to do with what kind of reception he learns to expect from others. It therefore colors his willingness to try to do things well, quite apart from his ability to do them well.

If you will notice, there are two thoughts contained in this quotation: (1) competence and (2) self-worth. I submit that a large number of men with whom we deal have a great amount of competence but that a large number of the men with whom we deal do not have the sense of self-worth. These men are able to do things well but they withdraw and will not try to do things well. And so one of the great objectives of a correctional educator is to motivate and to show by a genuine, all-consuming, dedicated interest in each of the students that this man is really worth something. Until we get that concept across, we will never be able to produce anything but a completely competent criminal.

Attitude Toward Yourself - An Epilogue

In coping with frustration, in dealing with obstacles, in surmounting difficulties, in walking with men and talking with kings, it is important that we gain and retain a constant sense of cheerfulness. I have one story to illustrate this.

Archie, in the classic tales of Don Marquis, is the cockroach who writes the biography of Mehitabel, an alley cat. Mehitabel hated kittens but being an alley cat, she bore them regularly. One of her amours was a French tomcat who taught her a number of French words and phrases: toujours - always; gai - happy; je t'aime - I love you. After some dalliance, Mehitabel became gravid and her French consort sought other conquests. In the course of time the progeny arrived. Mehitabel hated them. She hated to feed them, move them, clean them. Finally she shook her head and said: "Toujours gai, wothehell, wothehell, wothehell." I submit that in the great task you have before you, the philosophy of Mehetabel will be frequently necessary to sustain you.

REDIRECTION IN CORRECTIONS THROUGH ADULT BASIC EDUCATION

T. A. Ryan
University of Hawaii
Honolulu, Hawaii

Introduction

Half of the American adults over 25 cannot read well enough to get along in today's society. They are functionally illiterate. The definition of functional literacy is expressed in terms of having the skills required to get along in today's society. This means being able to cope with things like newspapers, job applications, drivers instruction manuals, income tax returns, job instructions, television guides. Harman (1970) said that half the population in America' affluent society of the seventies could not cope with these everyday demands for existence.

The Census reports at least 20 percent out of a population of 223 million adults, which points to some 45 to 47 million adults, fifteen years of age and over, who cannot expect to get or retain employment commensurate with their potential abilities due to a lack of basic skills.

Since the passage of the Adult Education Act of 1966 a concerted effort has been made, and federal funds have been invested, to erase, at least in part, this blot on the pages of contemporary American history. A significant investment has been made through state grants, teacher training programs, and special experimental demonstration projects to come to grips with the problem of America's adult illiterate men and women, who constitute a tax-burden, rather than being tax-paying citizens. The appropriation of funds under P. L. 89-750 is a national recognition of the problem, and an all-out attempt to marshal resources in an effort to achieve a solution. For the most part, significant inroads have been made through local, state, and federal efforts to eradicate functional illiteracy in this most affluent nation of the twentieth century.

One group, however, remains on the outskirts of these efforts to ameliorate the literacy problem of the United States. One segment of the functional illiterate group has remained on the other side of the track. Except for sporadic and uncoordinated local efforts, this group has been a drain on the tax dollar and a blight on the national scene. This group has been and will continue to be the forgotten, the neglected, the rejected, the men and women who have failed, who have been castigated by society for their failures, and who--but for the grace of God--will fail again. Who are these men and women, the forgotten, the neglected, the rejected adult illiterated of twentieth century America?

A Profile of the Offender

Who are the prisoners, parolees, probationers of American society, the men and women who live outside-the-law, whose behaviors are anti-social? The answer to this question is a picture of the academically, vocationally, and socially deprived segment of American society. The Adult Education Act of 1966 describes the bulk of the prison population of the twentieth century: "Those adults who by virtue of their deficiencies in communications, computation, or social relationship skills are substantially impaired in their capability of getting or retaining employment commensurate with their real ability (U. S. Congress, 1966)." The Adult Education Act, passed by Congress in 1966 and amended in 1970, was, and is, a national recognition of the critical education problem facing the American nation in these times of strife and stress. The problem, in its most simplified form, is a question. How, in this nation of affluence and upward mobility, can the substantially large segment of the population be denied the right to these national benefits by their own academic, social, civic, and vocational limitations, be afforded an equal opportunity to achieve and enjoy the personal satisfactions and social benefits of a free society?

The jails, workhouses, penitentiaries, and reformatories of the nation admit, control, and release an estimated 3 million individuals each year. This is roughly half the population of New York City. On the average, approximately 1.3 million people, greater than the population of any of 15 states, are under correctional authority. The average daily population in corrections in 1975 is projected at 1.8 million (American Bar Association, 1971).

Corrections officials estimate that 85 percent of state prison inmates are school dropouts. This means that over one million persons in the United States penal institutions and correctional settings lack the schooling required to enter and maintain gainful employment. The American Bar Association estimates the average educational achievement at fifth to sixth grade level (American Bar Association, 1971). These men and women manifest a distorted value system, the majority are insecure, exhibit little self-discipline, have a low self-image. Forty percent are without previous work experience. In light of the academic, vocational, and social deficits of this substantial segment of American society, is it any wonder that they represent a failure of the American system.

Correctional officials describe the average state prison inmate this way: 85 percent are school dropouts; the average educational attainment is the fifth or sixth grade; the average I.Q. is 85; 20 percent are mentally retarded; 40 percent are without previous work experience; most have a distorted value system; the majority are insecure, exhibit little self-discipline, and possess a low self-image. Most important, 96 percent will walk the street as free men after an average stay of two years.

The criminal law cannot be more effective in the long run than the quality of the correctional procedures which are brought into play. What

we must never forget is that, barring few, every inmate of our prisons is due to mix and mingle again in society, sooner or later (Jaworski, 1970). President Nixon noted in a memorandum to the Attorney General almost a year ago: Today, at least 40 percent of all offenders released from custody eventually return to prison. The FBI Crime Reports for 1968 show that 82 percent of a sample of offenders arrested in 1967-68 had been arrested previously. In spite of the fact that they have been exposed to the presumably beneficient influences of the home, the church, and the school, they stumble from one mud puddle of life to another . . . (Beto, 1960).

A Look at the Correctional System?

The correctional system does not correct. Time, January 18, 1971, describes the American correctional system as a hodgepodge of uncoordinated institutions run independently by almost every governmental unit in the United States. Most offenders have, at some point, been incarcerated in one of the 4,047 county jails or similar local lockups, the worst of the correctional evils. The jail mess is typified by New Orleans' Parish Prison, which Time describes as a putrid pen built in 1929 to hold 500 prisoners, but, which in 1970 was housing 850. Many four-bunk cells hold seven inmates. Mattresses smell of filth. Toilets are clogged. Education is unheard of (Time, Jan. 18, 1971).

The idea that imprisonment corrects criminals is a myth. Before the eighteenth century, prisons were mainly for the debtors and accused. The convicted were punished--swiftly and completely. There was no turning back from the slice of the guillotine. In 1870 in Philadelphia, the Quakers started a humane alternative to the practice of corporal punishment which had pervaded corrections for centuries. The Quakers introduced the cage concept. They locked the convicted in solitary cells, until death did them take. Today, America is punctuated with these cages. The idea of education or training is anathema to the notion of caging. Most states provide no usable training. In this perverse climate, the prisoner is expected--by osmosis, no doubt--to become socially and civically responsible, economically efficient, and to develop that ultimate goal--a positive self-image. But, he is given no chance to reach these noble ends.

In the first week of September 1971, Time magazine confirmed the fact that the grim prediction of a man, that he would not leave the California prison system alive, came true (Time, Sept. 6, 1971). In one of the bloodiest prison upheavals in modern times, George Jackson was killed while attempting to escape from California State Prison at San Quentin. With him died three prison guards and two fellow inmates. The bloody carnage lasted only a few tragic minutes, but in that time the gauntlet was thrown. A society founded on promise of salvation for the lame, the halt, the sick, and a guarantee of equal opportunity for all men was taken to task. The so-called tenets of the American penal system were shaken to the foundation. The reports of rehabilitation and correction as primary goals of the penal system were suspect in light of the riot report and pictures of 25 prisoners stripped naked, manacled, and forced

to lie on the prison ground for six hours. In a feature article in the September 27 issue of Time, the tragedy of corrections is described:

> At 9:44 on a drizzly overcast morning . . . a radio loudspeaker snapped out the order to attack. Through the stinging mist of CS pepper gas dropped by Viet Nam-style helicopters, yellow-clad troopers set off a barrage of rifle fire from atop 30-ft. prison walls. More than 500 officers--armed with shotguns, rifles, pistols, and clubs--charged into the crowded compound, shooting as they ran. Sporadic firing continued for nearly an hour. When the one-sided battle was over, lawmen representing the State of New York had killed 26 convicts and nine . . . hostages . . . That was Attica (Time, Sept. 27, 1971, pp. 18-19).

The violence at Attica sent tremors throughout U. S. prisons. One uprising took place at Baltimore city jail, where some 200 prisoners, nearly all unconvicted blacks awaiting trial, rioted in the mess hall, The convulsion of conflicting values and emotions put in question the future of a penal system that most responsible authorities consider a dismal failure. Many officials, including President Nixon, hoped that the tragedy would give a sorely needed impetus to prison reform. Others worried about the danger of a new rush toward repression that would make prisons even more inhumane. Attica had a population of 2,250 prisoners, 75 percent of whom were black or Puerto Rican. All of the 383 guards were white.

Former inmates of Attica contended that solitary confinement was frequently imposed for minor infractions, and that beatings in the elevator en route to "the box" were common. Inmates were allowed only one shower a week, even though many worked (for as little as 25¢ a day) in the metal shop, where temperatures exceed 100°. One bar of soap and one roll of toilet tissue were the maximum allotment each month. There was little useful vocational training.

Many inmates were incarcerated for violent crimes; many were there for lesser offenses. At Attica, they were treated without distinction, as numbers of niggers or animals to be caged. Rev. Charles F. William, of St. Paul's United Church of Christ, in a sermon at the funeral of one of the deceased guards stated that Attica is a part of the tragedy that is the world.

What is this tragedy? This is the tragedy of man's inhumanity, the failure to implement the American dream in an operational reality. The American Creed holds that this nation subscribes to the doctrine of equal opportunity and recognition of individual worth. These tenets can be implemented only by concerted and supported national effort, operating in a state and regional framework, to meet the needs of the disadvantaged; to change the behaviors of the imprisoned.

Attica, according to Time, is not the worst of the 4,770 American prisons and jails. It has too much competition. It is, however, fairly

typical of a penal system that will stand to attest to the disgrace of the nation and the failure of the civilization (Time, Sept. 27, 1971).

This nation does have a responsibility to the one million male and female adult illiterates who are incarcerated--supposedly to prepare them for reintegration into society and at the same time to protect society against them until they are able to function as fully productive persons in the free world. These functional illiterates cannot and will not achieve the goal of social and economic reintegration and productivity until they overcome the handicaps of academic, vocational, and social deficiencies. In 1969, under the Adult Education Act of 1966, funds were made available to support a program designed specifically to achieve the goal of academic, vocational, and social development of the functionally illiterate adult population. The dividends from this investment of national funds will long be coming, as functionally illiterate tax-burdens are transformed into productive tax-paying citizens.

The factors of historical antecedent, social rejection, and physical isolation militate against acceptance of responsibility for the offender. Society has acknowledged an obligation to help the non-offender adult illiterate develop skills, knowledge, and attitudes to make him capable of assuming his adult role in the community. Yet, the one million illiterate offenders, 96 percent of whom will walk the streets as free men after an average prison stay of only two years (American Bar Association, 1971) until very recent times have been denied an opportunity to extricate themselves from the cesspool of illiteracy.

The bulk of correctional resources has been and continues to be spent on incarceration, a strategy which can only work against possible reintegration of the offender into a free society. They are cut off from schools, families, jobs. They have no chance to rise above the level of illiteracy. If the correctional system is, in fact, going to correct, there must be a redirection in the system.

Adult Basic Education in Corrections Program

In May 1969, the Education Research and Development Center of the University of Hawaii, with support from the United States Office of Education, Division of Adult Education Programs, initiated a program designed to promise a new direction in corrections through adult basic education. The Adult Basic Education in Corrections Program is a vehicle for multidisciplinary, interagency, and interdepartmental marshalling of forces to meet the needs of the men and women in the state and federal prisons and reformatories. This is a model for redirection in corrections. The program is a tacit acknowledgment of the critical need to provide educational programs to meet the special needs of adult offenders whose basic academic, vocational, and social deficiencies militate against their being fully functioning persons in either the closed or open society. Three distinct but related outcomes have been realized thus far from the program: (1) analysis of the existing situation, (2) systhesis of a conceptual model of adult basic education in corrections, (3) design

of 66 models for delivery systems of adult basic education in corrections.

In 1971, instructional models with produced or selected hardware and software will be designed for 60 institutions. This is a drop in the bucket. The real challenge is ahead--getting adult basic education in corrections systems implemented and operational in the over 4,000 institutions which will not have been touched thus far--bringing adult basic education in corrections to over one million academically, socially, and vocationally deprived adults. Implementing the assumption that the extent to which systems techniques are effective in bringing about positive change in a system depends on the degree to which the environment has been prepared for introduction and operation of a new system. The Adult Basic Education in Corrections Program provides and has included a training counterpart to model design and implementation.

Since the program onset in 1969, training has been provided to 182 individuals and it is anticipated that 1972 will see training of another 150. In developing the conceptual model of adult basic education in corrections, four basic techniques were used: (1) Modeling, that is, the process of producing highly simplified but controllable versions of real life situations, is a systems technique by which parts, functions, and processes can be organized and combined into meaningful wholes. (2) Analysis, the process of identifying a whole, relating the parts to each other and to the whole itself, separating the parts and limiting the process so parts do not lose identity (Silvern, 1965). (3) Synthesis, an innovation consisting of identifying parts which are essentially unrelated, relating these parts, combining them to form new wholes, and limiting this process when combination is either not possible or not needed (Silvern, 1970). (4) Simulation, the testing of a model or processing data through a model to see if it produces predictable results (Silvern, 1965a).

A generalized model for producing a model shown in Figure 1 (based on Silvern, 1965a), describes the way in which analysis, synthesis, modeling, and simulation were related to produce the conceptual model. In the flowchart models, such as the one in Figure 1, functions are shown in functional blocks, or rectangles, each of which is identified by a descriptor, such as CONCEPTUALIZE THE SYSTEM, and a point numeric code, such as 1.0, 2.0, . . .n. Sub-functions, such as EXAMINE REAL LIFE ENVIRONMENT, and ASSESS NEEDS are coded 1.1, 1.2, . . .n. The signal path represented by a straight line with arrowhead at the end carries objects, activities, information or data in the direction of the arrowhead. The feedback signal (F) indicates that information is output from a subsystem and then input to a preceding subsystem to create a closed loop and control output of the preceding subsystem.

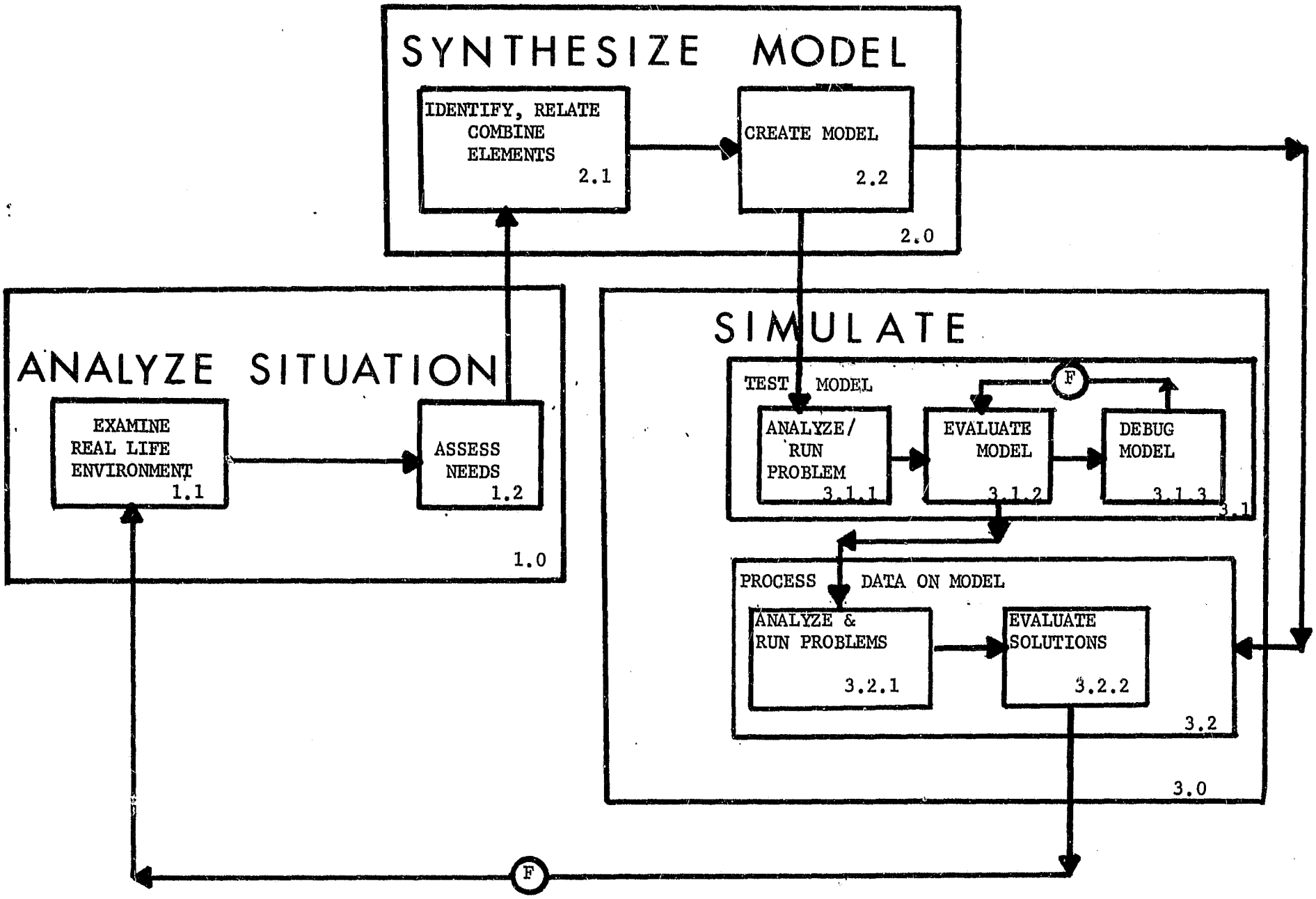

Fig. 1. Model for producing a model.

Adult Basic Education in Corrections Model

The conceptual model of adult basic education in corrections is shown in Figure 2.

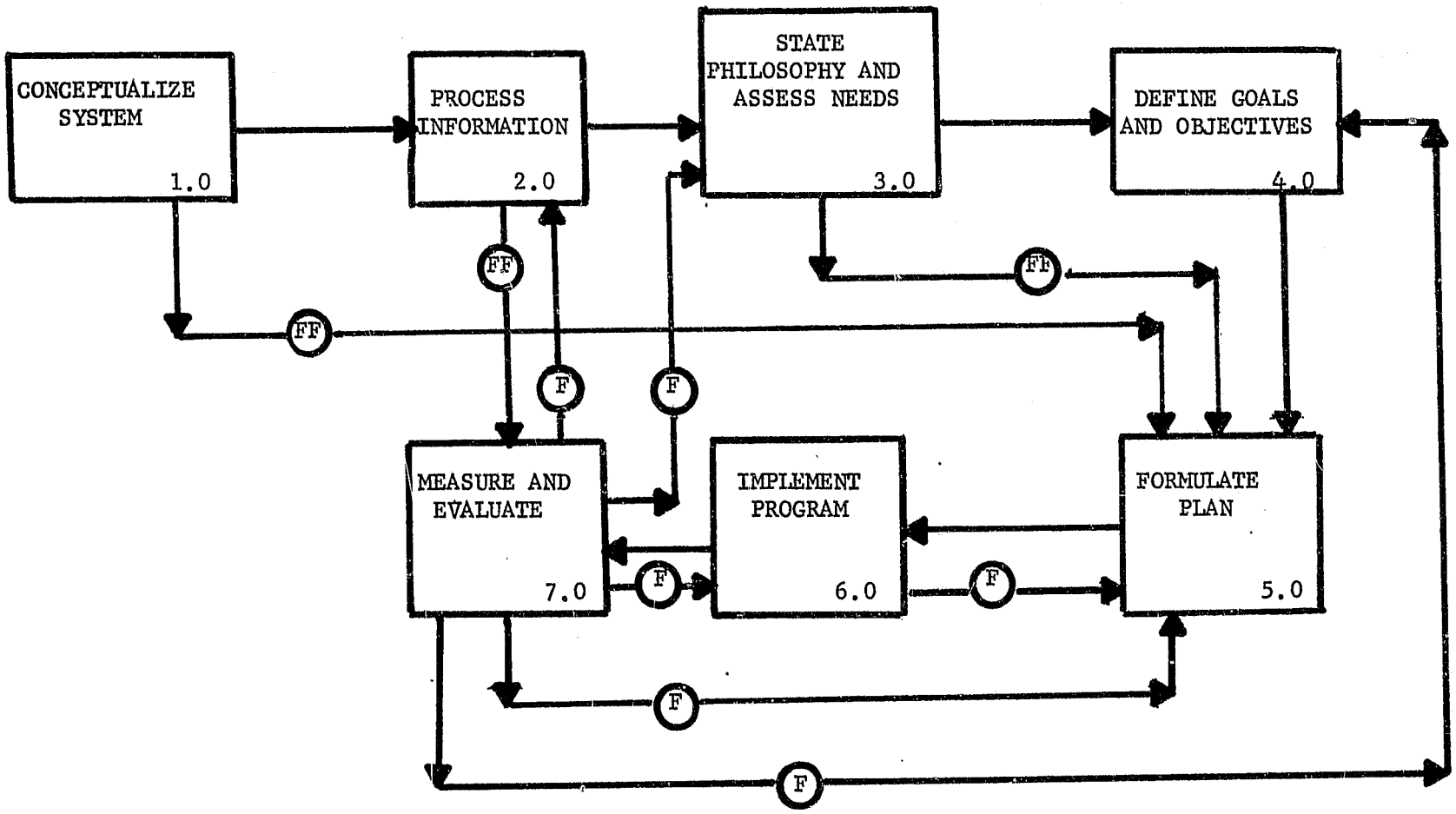

Fig. 2. Model of Adult Basic Education in Corrections.

Overview of the Model

The Model of Adult Basic Education in Corrections[1] provides a blue print for management and instruction correctional settings, and constitutes a vehicle by which it is possible to organize parts, functions and processes of a basic education into a meaningful whole and at the same time insure integration of education with other elements in the total system of corrections. Hillier and Lieberman (1967) point out the tendency in any organizational system for the various components to grow into relatively autonomous empires, each with its own goals and values, thereby losing sight of the way in which the activities and objectives of the separate sectors should mesh with those of the total system. Reisman and Taft (1969) hold that it is not unlikely to find components of a system working at cross purposes. Miller (1969) observes that the more complex the system the more difficult it is to allocate available resources to contribute to the working of the organization as a whole.

These problems are manifest in corrections, deriving in part from historical antecedents which emphasized punitive and retributive aspects of criminal justice, and heightened by the problem of allocating resources to support potentially incompatible functions of industry, security, and education. The Model of Adult Basic Education in Corrections is designed to provide a means of integrating education with other functions of corrections, and offers a way to achieve control in a performance context, through continuous appraisal and program adjustment. A closed loop pattern insures that demonstrated performance will be evaluated against performance objectives and assigned functions.

The judicious use of analysis, synthesis, modeling, and simulation to manage adult basic education in corrections should eventuate in clearly defined goals and purposes, identified methods by which these purposes can be achieved, consideration of alternatives in terms of consequences, and evaluation of individual progress and project effectiveness.

Functions in the Model of Adult Basic Education in Corrections

There are seven functions or elements in the Model of Adult Basic Education in Corrections developed in Phase I of the University of Hawaii Program: (1) conceptualizing the system; (2) processing information; (3) establishing a philosophy and assessing needs; (4) defining goals and objectives; (5) formulating plans; (6) implementing programs; and (7) measuring outcomes and evaluating individuals and programs. Each function has a number of supporting sub-functions, with every function and subfunction bearing a direct relationship to the operation of the total system.

---

[1]Model developed in part in a project supported by Grant Nos. OEG 0-9-211000-4248(323) and OEG 0-70-3431(323) from the United States Office of Education, Division of Adult Education Programs.

The relationships between among the Model functions are shown in the first level detail in the flowchart model in Figure 2, which shows a closed loop model with feedback at appropriate places to exercise quality control and guide ongoing changes and adjustments within the system. Each of the seven major subsystems must be implemented to achieve an effective, efficient system operation.

Conceptualize the System (1.0). The basis for sound educational management is a clear statement of the system (Banathy, 1968). This system description including all elements which are part of the system universe can be accomplished by analysis, which should serve to set the limits to the area of concern by separating the system from its environment and relating it to other distinct systems. It is essential at the onset to identify relationships among the major components of the corrections supersystem, elucidating roles and functions of industry, security, and education, and defining the subsystems of correctional education. This Model is concerned with adult basic education in corrections. Therefore, it is incumbent upon the decision-maker to start with a working definition of adult basic education. This Model implements the definition of adult basic education given in Public Law 89-750 (1966) and 91-230 (1970). The foundation for system design is specification of parameters--the system requirements in terms of time, facilities, budget, personnel, and learners.

Process Information (2.0). The Adult Basic Education in Corrections Model is an information model. To achieve an efficiently functioning system, there must be provision for obtaining, evaluating, and utilizing information. Four kinds of information must be at hand: input, output, process, and environmental. It is essential to know what the learners are like at entry point; what they are like when they exit the system; the extent to which any adult basic education activity directed to goal attainment is effective; and the relation of the system to the environment. A feedback system implemented in this model is part of the design to provide continuous information at appropriate operational decision points so changes in the system can be made as a result of information received about the environment with its social, cultural, and value factors. Analysis of information about the general prison population, learner subgroups, the cultures and social structures inside and outside of the institution provides a basis for examining a philosophy and assessing needs.

Establishing Philosophy and Assess Need (3.0). A system cannot function effectively apart from the real-life environment of which it is a part. In (2.0) focus is on this real-life environment. It is here that the dynamic conditions which combine to make up the real-life environment of the adult offender are considered. In taking into account social and cultural factors and value systems, there is an implicit obligation to consider these data in relation to the target population of offenders and the two environments in which they must relate. It is not enough to

think of the parameters of the closed environment of the prison setting, with its own social relations and structures, subcultures, and conflicting values. It is equally important to consider the environment of the free community to which most of the offenders will return. It is essential to explicate the underlying philosophy of the total system as a precondition to assessing needs. It is here that immediate and long-range goals of the correctional system must be taken into account. The philosophy of any setting, that is the statement of guiding beliefs about the purposes of corrections and education, the rights, responsibilities of the offender, should serve to establish the ideal baseline to use in assessing needs. Analyzing the existing situation and comparing it to the ideal situation implementing the setting philosophy should result in pointing up discrepancies between real and ideal. These discrepancies represent needs to be met.

Define Mission, Goal, and Objectives (4.0). Systems procedures generally are defined in terms of two basic operations: stating goals to resolve identified problems, and organizing procedures to achieve defined goals. Ryan (1970) holds that the critical point in use of systems techniques is reached when system mission and goals are defined. Goals must be implemented in objectives, followed by priority ranking of multiple objectives, and choosing between incompatible objectives. In the correctional setting it is important to state alternative objectives based on profiles of individual learners. A spectrum of objectives should be available to implement broadly stated goals of Adult Basic Education in Corrections and facilitate individualization of instruction. The Model of Adult Basic Education in Corrections defines four basic goals of corrections: development of economic efficiency, development of social productivity, achievement of civic responsibility, and achievement of self-realization (Ryan and Silvern, 1970). In each setting these goals must be implemented in sub-goals which, in turn, are broken down into performance objectives. This is accomplished as terminal performance behaviors are identified, conditions under which these behaviors will be demonstrated are named, and criterion levels of acceptable performance are stated. Objectives are tools to guide and direct management and teaching. Therefore, it is important that each objective meet a quality test. Ryan (1970) describes a SPAMO test which specifies five criteria for quality which should characterize each objective: specificity, pertinence, attainability, measurability, and observability.

Formulate Plan (5.0). The curx of educational management and teaching lies in design of viable plans. In the Model of Adult Basic Education in Corrections these plans are conceptualized as hypotheses. The rationale for this is that each plan should be held as tentative, always subject to change as feedback from the system points up areas where change is needed. In the educational plans formulated in (5.0), objectives are detailed, resources and constraints identified, parameters modified and possible solutions identified and evaluated. Evaluation of alternatives and subsequent priority ordering leads to selection of best alternative. This is the plan to be implemented.

Implement Program (6.0). When the plan designed in (5.0) is put to the test, strategies are developed to create learning environments and experiences. The environment strategies rest on consideration of ecological factors, establishing a climate for learning, adapting or designing facilities, and providing for individualized and/or group instruction. An adult basic education curriculum is designed and implemented in units and lesson plans. Hardware and software are selected or produced involving evaluation and selection of alternative choices of materials-media-methods mixes to utilize various combinations of personnel and facilities at varying cost levels.

Measuring Outcomes of System Operation and Evaluating Individual Progress and Program Effectiveness (7.0). Measurement of outcomes is a precondition to evaluation of project plans developed in (5.0) and validation of strategies implemented in (6.0). Measurement must precede evaluation, as the data produced from measuring operations outcomes and products will provide the basis for judging system effectiveness. Measurement is partly a function of performance specifications which should spell out in precise measurement terms the terminal performance units intended to eventuate from implementing the project plans and strategies. Sound educational management and instruction rely on selection and use of appropriate measurement criteria. Measurement must include internal and external criterion tests. Internal tests administered immediately following and during implementation of project plans provide important information to indicate individual progress and suggest adjustments of the system. However, it is only through the external tests, administered in the form of long-term follow-up that data can be gathered to indicate true worth of the project.

Evaluation is a process of determining or judging value of performance or assigning values to performance outputs. Analysis of measurement data is the basis for evaluation. In the correctional setting it is imperative to implement the evaluative function internally and externally. This is accomplished by use of self-evaluation and external criterion evaluation, and by taking evaluation on two time dimensions, immediate and long-term. The only way to evaluate a project is to find out the extent to which the intended product is being turned out. This means comparing performances implementing learner behaviors or products against criterion standards. Evaluation data feedback into the system to direct and control system modification. It is in the evaluation function that accountability is achieved. Feedback from evaluation returns to the system at given points--assessment of needs; definition of objectives, formulation of hypotheses, testing of hypotheses, and measurement of progress. Results of evaluation can change goals and objectives, introduce new information and modify needs, alter philosophical basis of the system, introduce changes in project plans, modify strategies of learning experiences and environments, and change testing procedures and instruments. It is through the evaluation function that system effectiveness and efficiency are determined.

Conclusions

The story of the one million functionally illiterate men and women in the nation's correctional settings is not a happy one. Attorney General Ramsey Clark challenged this nation to have a clear and generous meaning of equality for all. He has called on us to strive to fulfill the obligations of a great nation, to achieve needed reform, to offer fulfillment, human dignity, and reverence for life (Clark, 1970).

We can--and we must--meet these challenges by superceding the caging concept with an educational concept--providing adult basic education for the men and women in every local, state, and federal correctional institution in this nation. We can change their behaviors. We can rehabilitate and correct these outcasts from society. We can--and we must--continue to bring to and implement in every jail, penitentiary and reformatory in the nation the model of Adult Basic Education in Corrections, and thereby achieve redirection in corrections. We can--and we must--develop and implement systems of adult basic education for offenders. It is up to us to open the doors for over one million Americans to a productive, socially, and personally acceptable and satisfying way of life.

References

American Bar Association. Marshalling citizens power against crime. Coordination Bulletin 42. Washington: Chamber of Commerce of the United States, 1971.

Banathy, B. H. Instructional systems. Belmont, Calif.: Fearon Publishers, 1968.

Beto, G. J. Continue work, so much to be done. American Journal of Correction, 1970, 32, 4-7.

Clark, R. Criminal justice in times of turbulence. Saturday Review, September 19, 1970.

Churchman, C. W. The systems approach. New York: Dell Publishing Company, 1968.

Congdon, N. The volunteer and academic education for rehabilitation of prisoners. Adult Leadership, 1971, 20, 49-50.

Corrigan, R. E. Instructional system approach: An overview of system processes and requirements. Anaheim, Calif.: R. E. Corrigan Associates, 1969.

Death in San Quentin. Time, September 6, 1971, pp. 17-18.

Harman, D. U. S. adults called "illiterates," Honolulu Star Bulletin. Honolulu, Hawaii, May 31, 1970, p. A-13.

Hillier, F. S., & Lieberman, G. J. Introduction to operations research. San Francisco: Holden-Day, 1967.

Hosford, R. E., & Ryan, T. A. Systems design in the development of counseling and guidance programs. Personnel and Guidance Journal, 1970, 49, 39-45.

Jaworski, L. The challenge and the response. In U. S. Congress, Senate, Congressional Record, November 19, 1970.

Joint Commission on Correctional Manpower and Development. A time to act. Washington: American Correctional Association, 1969.

Kane, R. M. A system approach: Accountability with "justice." Paper presented to Institution on General Systems Education, San Jose, California, June 11, 1970.

Kaufman, R. A. A system approach to education: Derivation and definition. Audio Visual Communication Review, 1968.

Miller, D. R. Policy formulation and policy implementation relationships in an educational system. In Kraft, R. H. P., Strategies of Educational Planning. Tallahassee, Florida: Florida State University, 1969.

President's Commission on Law Enforcement and Administration of Justice. The challenge of crime in a free society. Washington: U. S. Government Printing Office, 1967.

Reisman, A., & Taft, M. I. Systems approach to the evaluation and budgeting of educational programs. In R. H. P. Kraft, Strategies of Educational Planning. Tallahassee: Florida State University, 1969.

Ryan, T. A. Systems techniques for programs of counseling and counselor education. Educational Technology, 1969, 9, 7-17.

Ryan, T. A. Model components. In T. A. Ryan (Ed.), Collection of papers prepared for 1970 national seminars: Adult basic education in corrections. Honolulu: Education Research and Development Center, University of Hawaii, 1970. (a)

Ryan, T. A. Behavioral objectives for adult basic education in corrections. Paper presented to Correctional Education Association Regional meeting, Trenton, New Jersey, 1970. (b)

Ryan, T. A. Systems techniques in school counseling. Paper presented at National Society of Programmed Instruction annual meeting, Anaheim, California, 1970. (c)

Ryan, T. A. Experimental training program in adult basic education in correctional institutions. Final Report. U. S. Office of Education Grant No. OEG 0-9-211006-4248(323). Honolulu: Education Research and Development Center, University of Hawaii, 1970. (d)

Ryan, T. A. Model of adult basic education in corrections experimental edition. Honolulu: Education Research and Development Center, University of Hawaii, 1970. (e)

Ryan, T. A., & Silvern, L. C. (Eds.). Goals of adult basic education in corrections. Honolulu: Education Research and Development Center, University of Hawaii, 1970.

The shame of the prisons. Time, January 18, 1971, pp. 48-56.

Silvern, L. C. Systems engineering of education I: Evolution of systems thinking in education. Los Angeles: Education and Training Consultants Co., 1965. (a)

Silvern, L. C. Basic analysis. Los Angeles: Education and Training Consultants Co., 1965. (b)

Silvern, L. C. LOGOS: A system language for flowchart modeling. Educational Technology, 1969, 9, 18-23.

Silvern, L. C. Basic synthesis. Los Angeles: Education and Training Consultants Co., 1970.

U. S. Department of Health, Education and Welfare. Adult basic education: Meeting the challenge of the 70's. First annual report of the National Advisory Committee on Adult Basic Education to the President of the United States and Secretary of Health, Education, and Welfare. Washington: U. S. Government Printing Office, 1968.

U. S. Congress. Public Law 89-750, 89th Congress. (November, 1966). "Adult Education Act of 1966."

U. S. Congress. Public Law 91-230, 91st Congress (April, 1970) "Amendment of Adult Education Act of 1966."

War of Attica: Was there no other way? Time, September 27, 1971, pp. 18-26.

The way to reform. Time, September 27, 1971, pp. 26-31.

ASSESSING NEEDS

(3.0)

Introduction

> Needs are discrepancies between what is and what is desired (Ryan, et al., 1975, p. 54).

When the real life environment has been analyzed and a philosophy has been established, a needs assessment can take place.

> The needs assessment will result in a list of needs, expressed in terms of (1) specified changes in behaviors of learners that need to be brought about, and the numbers of learners for whom these behavior changes must be achieved; and (2) organizational changes which are required to make real and ideal congruent program additions or deletions which are required to make real compatible with the ideal as expressed by post-release job and social requirements (Ryan, et al., 1975, p. 54).

The focus of the papers in this section is on offender needs. Eischen begins by discussing how offender educational needs and ways of meeting them may differ from non-offender needs. He emphasizes the need to correlate what is taught in institutional programs with what the offender will have to do to earn a living, pointing up that many offender needs are not currently being met.

The next four papers offer insights into the needs of offenders from the perspectives of ex-offenders. Elerbe discusses the needs of offenders upon entering a correctional institution, their corrective educational needs and the need for qualified staff. Lothridge and Jones also discuss offender needs, with Jones focusing on needs of female offenders, and needs of offenders upon being released from an institution. Lothridge is concerned with educational, vocational, and social programs and ways in which they are currently failing to meet offender needs. Johnson focuses on educational needs of offenders.

Reference

Ryan, T. A., Clark, D., Hatrak, R., Hinders, D., Keeney, J., Oresic, J., Orrell, J., Sessions, A., Streed, J., & Wells, H. G. Model of adult basic education in corrections. Honolulu: University of Hawaii, 1975.

MEETING THE NEEDS OF OFFENDERS

Claus J. Eischen
Fidelity Union Trust Company
Kearny, New Jersey

In the microcosmic world inside an institution, one of the last things a con thinks about is furthering his education. His first and foremost consideration is being able to do his time as easily and as trouble-free as possible. When, and if, he is able to adjust satisfactorily to life "inside," then perhaps, if he is properly motivated, he may devote some of his energies to increasing his knowledge, provided the facilities are available.

Educators and institutional personnel alike seem to think that by providing classrooms, texts, and teachers--simulating the public school environment--they are providing an ideal educational environment. What all of them seem to forget is that the men attending these classes rebelled against just such a setting on the "outside" and their primary reason for attending while incarcerated is because it looks good on their institutional records.

For those very few individuals interested in learning to better themselves, the classrooms are merely a convenience. For the majority of the men the classroom is just another means of passing time, sometimes pleasantly, sometimes boringly, and if they happen to learn something while attending, so much the better. If they didn't learn anything, so what, at least it helped to pass the time. If they stay in the institution long enough to earn a diploma of one kind or another, whether it be just for good attendance, for having attended a nonsense 'social adjustment' course, or for just taking part in a discussion group, it again looks good on his record and the institution can add to its statistical support of the "fantastic" job its doing. For those few men who have the time to earn a literacy, elementary or high school diploma in those institutions where such comprehensive programs are available, the educators feel they have done their jobs and provide little, if any, further guidance.

There is little correlation between what is taught in schoolrooms and what the man has to do to earn a living when he is paroled. Of what use is algebra to a truck driver; geography to a mechanic; good English to a boiler tender. Because certain standards are set in the public school systems does not mean they are applicable in their entirety to institutions. Most men have at least an idea of what they want, or would like to be able to do to earn a living. Some of these wants are thoroughly unrealistic, but most of them are not. Most of them tend to lean toward the mechanical or service fields. By mechanical I mean automotive, plumbing, building, and by service I mean barber, beautician, restaurant.

Ideally, due to lack of time and disinclination to learn unrelated subjects, programs should be geared to teach the man what he wants and

needs to know in order to function adequately in society. Realistically, this requires a fantastic shift of policies by state legislators and institution administrators. It is not even enough to teach a man to be an excellent barber or a good electrician if the state will not license him or the unions will not let him join.

MEETING THE NEEDS OF OFFENDERS

John E. Elerbe
Residential Treatment Center
Newark, New Jersey

Introduction

There have been some changes in the correctional institutions for the good of the offender. There was a time when the inmate looked upon the penal setting solely as a place of punishment. Today with prison reform, this image is slowly being destroyed. No longer is the institution using the inmate strictly as a labor force. The penal institutions today are implementing programs that are beneficial to the offender upon his release. Because these programs are geared to the needs and the interest of the offender, the offender has a better chance for rehabilitation. Most penal institutions throughout the country today have added basic adult education, college programs, work-release, and vocational training to their rehabilitation programs. Unfortunately, concentration on these programs alone will not suffice for the complete rehabilitation of the offender. For these programs to be successful, they must be united with psychotherapy.

The Need of the Offender Upon Entering the Institution

When the offender enters an institution, he is placed in an unbelievable and terrifying situation. He is suddenly snatched away from whatever it was that he considered real. He is deprived of that which was meaningful to him. He is thrown into a hopeless situation and he is helpless. The offender is subjected to many rules and regulations which he is forced to follow;rules which are enforced to control his thinking ability and his behavior. He is stripped of everything which he identifies with, except his personal problems and emotional conflicts which are mainly the reason for him becoming an offender.

From the very first day that the offender steps through the doors of a correctional institution his rehabilitation should begin. Consequently, the first approach to the offender is institutionally-centered and not individual-centered. Concentration should be placed on the particulars of the offender's crime. If the administration of penal institutions take such an attitude, I feel that the results would be most rewarding.

If an individual approach is first taken with the offender, it would help the offender to rid himself of his fears, frustration, and confusion. It should be realized that the offender is stripped of his identity, put into a hopeless situation where he is most helpless. In a situation such as this, any human being regardless of his status, needs help mentally.

This type of help for the offender could come in the form of group therapy sessions. I believe that if this approach is used the offender can encounter other individuals with problems similar to his. This can help the offender to talk of his personal problems and conflicts openly instead of keeping them within. If the offender encounters another offender with similar circumstances, this could lead to a person-to-person relationship with someone, and when this happens, the offender has found someone he can trust. If the offender can relate with an individual he can trust, he has the opportunity to move towards a better image of his surroundings and most of all, he can develop a much better image of himself.

Needs of the Offender in Corrective Education

A major objective in individual programs inside the penal institution, should be to prepare the offender to function in a successful manner once he is released. These programs should be geared around the needs and the interest of the offender.

Vocational Training

Unfortunately, with the emphasis on academic education, vocational training has taken a back seat. It should be taken into consideration that the entire population of a penal institution is not capable of successfully completing educational programs to the point where the completion of the program would be beneficial to him upon his release. Therefore, the offender who is academically incapable should be motivated towards vocational training. Here he can challenge an area of interest to him, and this would most definitely benefit him upon his release.

The New Jersey State Prison, where I was incarcerated for 49 months, did not have a wide-range vocational program. Within the prison were various shops that produced items for the use of the institution and state government. The shops consist of the tag shop, which made license plates for the state of New Jersey; the tailor shop, where they made clothing for the inmates; the knit shop, where they produced socks for the inmates and other state institutions; the upholstery shop, which produced mattresses for state institutions. Now take the inmate who is working in the tag shop who has a ten-year term to serve, in all probability he will work in that shop, on the same machine, until his release. Now after his release you have a man with ten years of experience on a machine without a job. He's without a job because in the state of New Jersey the prisons are the only place which has a machine that produces license plates.

Most prisons have some type of prison industry which produces items for use, such as the various shops. These shops could be revised so that they could be beneficial to the inmate who works within them. An instructor should be a skilled craftsman in his trade or occupation. With this type of supervision, the inmate will be instructed in a trade or skill that will qualify him to find gainful employment upon his release. If

this can not be done, they could use the employees that are employed on staff as maintenance personnel. Most of these employees utilize the inmate in their various jobs. Here some supervision and organization could result in the inmate receiving some type of occupational instruction.

Educational Programs

At New Jersey State Prison, an inmate who is enrolled in the college program can receive an Associate of Arts degree within a two-year period. This is something that was only a dream five years ago. To an individual, other than an inmate and under normal conditions, undertaking two years of college can be relatively easy if the initiative is there. With the inmate it can be relatively hard, because he first needs the initiative and motivation to undertake such a program. Even with initiative and motivation, the inmate is handicapped. He is handicapped because he is not given adequate time to concentrate on this studies. He does not have prime time for his studies because of his obligations to the prison. How can the inmate study after he has performed his duties for the prison? Believe me it can be rather difficult. Even if the inmate is given time to study, the location or area in which he has to do his studying is not favorable. How can the inmate concentrate on his studies if he is trying to study in his cell, or in a wing with one hundred other inmates who do not have the same goal? Distractions are unlimited when the inmate is trying to concentrate inside his cell.

Personal Counseling

I feel that any inmate who is enrolled in an educational program should have personnel available to him to give individual counseling after he begins the program and a follow-through program after his release. There are inmates who have been away from formal education from five to twenty years, and in some cases, longer. Only through their every day experiences were they able to pass and receive their GED. After receiving his GED, he takes on the college program, and through all this, he has not had any personal guidance. He needs personal guidance because while he is trying to receive the education that is offered, his personal problems and conflicts still exist. It must be remembered that the inmate does not have the formal college campus or the proper time it takes for honest comprehensive study. Of course there are a few exceptions who would excel under almost any condtions.

Take for instance the inmate who is enrolled in a program and halfway through completion of the program, he receives word that his wife is divorcing him; who can he go to with his problem? In fact, who can the inmate go to with any personal problem? It is impossible for anyone to comprehend studies under such personal strains, and harder yet for the inmate because he has no one to confide in. In this situation, the inmate needs qualified personnel, such as the psychologist, the psychiatrist and the social worker to meet his needs when undertaking educational

programs.

Conclusion

From my own observation and past experiences as an inmate at New Jersey State Prison, I found and encountered the lack of qualified personnel to meet the needs of inmates who are trying to rehabilitate themselves within the limited amount of programs and facilities made available to them through education. In the state of New Jersey they have implemented the Penitentiary Education Network Program. This program has approximately 228 inmates from the New Jersey State Prison, Rahway Prison, Leesburg Prison and Leesburg Farm, who are enrolled in college courses through Mercer County Community College. The program has a staff of eight instructors to instruct ten credit courses to the 228 inmates. The program also has on staff two counselors to give academic service to these inmates enrolled and other inmates who plan to enter this program. At New Jersey State Prison alone, there are approximately 13,000 inmates and they have just added one man to their staff who carries the title of Inmate Individual Treatment, to meet the needs of the 13,000 inmates. As one can see, the qualified personnel is very limited. I personally feel that there is an immediate need for reform in some of the areas of educational programs if education is expected to fulfill its highest potential as a productive combatant against crime and revolving transit of inmates that show up on graphs and become statistical data that create new programs that fail.

MEETING THE NEEDS OF OFFENDERS

Bobbie G. Jones
Chicago, Illinois

Most female offenders returning to Chicago from such correctional institutions as the Federal Reformatory for Women, Alderson, West Virginia; Dwight State Reformatory for Women, Dwight, Illinois, and The Cook County House of Corrections for Women, Chicago, Illinois, have not made a successful re-entry into the metropolitan area in terms of employment. This is because of the extremely rigid regulations followed by most companies of not hiring the ex-offender thereby forcing a critical situation.

These women, incarcerated without marketable skills, find it difficult to acquire them while in a prison environment, but some women are successful in spite of conditions. Mass keypunch education is the major training program in these institutions. The demand for qualified keypunch operators is declining. The institutions seem to be unaware of this situation or have over-invested funds in such a way that if this program was discontinued, they would suffer a great financial loss. But is this dealing with the concept or philosophy of rehabilitation that the correctional institutions imply? Will this unmarketable skill acquired in prison help a female offender find meaningful employment in the city of Chicago or any other city in this country?

After completion of a prison education or vocational training course, the offender is still under a tremendous amount of social pressure to secure employment for herself. There are several federal employment placement officers located in Chicago's federal building to assist offenders upon release to secure meaningful employment. Their hands are tied because very few companies hire ex-offenders.

Some companies will hire the female offender, but usually fit her into a low prestige and low paying position. Most companies, however, follow a policy of not hiring ex-offenders under <u>any</u> circumstances. The employment placement officers have broken through some barriers. However, many companies remain adamant in their decision not to hire ex-offenders because of preconceived stereotypes, attitudes, and beliefs connected with the word "ex-convict." Due to these negative concepts connected with the ex-convict the placement officer usually tries to channel the offender into a specific job. The offender then applies for the position at random not recording her past criminal conviction. This tactic is not always successful. When the conviction or prison record is discovered before the offender is hired, this is considered a legitimate reason to disqualify her for employment. If not discovered before she is hired it sometimes is discovered after she has been employed, and the discovery of her unrecorded prison record is usually grounds for dismissal. Therefore, the federal employment placement officer cannot adequately assist the female offender in securing significant employment.

The Illinois State Employment Service will usually refer the offender to available positions. However, the female offender finds that the same social stigma attached to her past prison record on the federal level also exists in local employment practices.

Most rehabilitation counselors handle their clients the same way, in referring them to available jobs. This is usually a simple procedure. The counselor locates job possibilities and informs the ex-offenders of these positions. The offender applies for employment at random and falsifies the employment application in order to secure the position.

There are not enough rehabilitation programs or services available that are geared towards the female offender's specific and unique needs. There are a few programs in the city dealing with male offenders and some of their needs in relation to adjusting from prison to community living. However, the female is excluded from these programs because they do not fit her specific needs.

The female offender should be made aware of resources in the community which she should be able to utilize to help her achieve a successful re-entry into society. Thus she can become an integral part of her particular community. But until the employment policies of not hiring ex-offenders is revised or dropped from employment practices, until the prison school is up-dated to standards within the communities, the female offender will not be able to secure meaningful employment from any training received while incarcerated.

MEETING THE NEEDS OF OFFENDERS

Zorina Lothridge
Detroit, Michigan

Preface

While serving a five-year sentence in the Federal Reformatory for Women at Alderson, West Virginia I obtained a General Education Diploma and began working in the education department as a clerk-typist. At this time I had completed every course available in the Academic Program, including clerical courses.

During my three years at Alderson I noticed the high rate of recidivism. Inmates seemed to come to Alderson, serve their time, leave, and before long return. I began to think about this. Why were these people continually returning; why could they not make a life for themselves outside of this place? It seemed to me that there was definitely something lacking in the system of corrections. Then I began to wonder how would I stay on the outside. What would I do upon my release. I had taken everything available to me academically at this time, yet I had nothing concrete to plan on for a living once I was released. Being the mother of two it is very important to me that I be able to remain outside of an institution.

I then tried for and was accepted in a vocational training program, only to discover that the equipment used in training was out-of-date and no longer in use outside of the institution. I looked back to the education department for an answer. Through the encouragement of Dr. Jacquelen L. Smith, Principal of the education department, and Mrs. Ruth K. Bostic, my caseworker, plus many others, I attempted and succeeded in being accepted by Wayne State University, where I am in my second quarter of classes. My sincere thanks for the opportunity to express my thoughts concerning the way in which inmates view the educational programs in federal institutions.

Needs of Offenders

While incarcerated at Alderson I was impressed by the fact that greater emphasis was placed on confinement than on rehabilitation. This was demonstrated by the attitude of the administrators and staff in all phases of this particular penal society. The majority of us here are aware that studies have indicated a lack of formal education may be one of the root causes of crime. Therefore it would seem as if the correctional administrators would attempt to set up programs to motivate inmates toward more formal education. The formal setting in a classroom, with the subject being the three R's, is not attractive to an inmate, but it the motivation were there, motivation that can be achieved through

the informal setting of a discussion group, more and more residents would become interested in education and seek out a formal, basic education.

Informal discussion groups with revolving topics such as materialism, dignity, racism of all kinds, philosophies, and parole, are desirable mediums of education. Classes on how to deal with bureaucracies particularly those faced by inner city people, welfare rights, tenants' rights, legal aid programs and social problems are the type of classes that would appeal to the overall population and be beneficial as well as relevant.

The attitude of the staff carries the ball in any rehabilitation program. With the right attitude coming from the staff the biggest obstacle in rehabilitation would be removed. Motivation is the greatest obstacle confronting the educational process in institutions.

Staff members are the medium with which these blocks can be overcome. It is not easy for most residents to gain motivation on their own, it has to come from someone or something else. There should be more trained and interested staff members to work with residents on an individual basis giving them the incentive and motivation necessary to want to better their position in life. Being in prison is punishment enough; when incarcerated with no one showing an interest in you or encouraging you, it is easy to give up or quit, and not try to build a future. Everyone cannot be helped but there are many who can and should be. You cannot lock a person up and ignore them and expect them to change themselves.

Educational Programs

The educational programs in institutions should be broadened to cover a wider area of interests as well as job opportunities. The diverse needs of different types of inmates--youth, long-timers, first offenders--would have a much better chance of being met if individual treatment were available, and more programs of better quality were offered to the individual which would be either motivating or concrete useful.

One complaint residents have about the present educational programs is that they do not cover a wide enough area, and that the courses offered are not designed to help the individual adjust to and find out where she fits into society. Another complaint is that the programs offered are inadequate, because they are only offering a part of what is necessary for a resident to become self-supporting. Educational programs should be designed to afford the resident the opportunity to continue on as far as her ability will allow. After completion of the G.E.D., residents are poaced on jobs that they have no interest in, while their talents and abilities are ignored. The average inmate is as ill-equipped upon her release to cope with society as she was when she entered the institution. In our complex, mechanized, specialized society the individual without a formal education, job skills, or a natural talent is extremely handicapped. The individual released from an institution is at a total loss because she also carries a prison record.

Opportunity

In the correctional society in which I was confined, educational programs were instituted whereby youthful offenders under thirty were allowed, on a voluntary basis, to attend classes leading to the equivalent of a high school education. Those over thirty were discouraged from attending classes. Many residents have less than a sixth grade education level, and if they happen to be past the age of thirty they are made to feel that they are too old to develop their mind. Age should not be a factor in determining who should and who should not attend classes. Anyone, regardless of age, who has the need and/or desire to further their education should be encouraged to do so. Basic education is necessary for everyone. It should be required that each person be able to read and write.

Compensation

More residents would take advantage of the existing educational programs available if it were not for the fact that they need the monetary compensation received from assignment in other areas. If there were compensation for attending classes there would be a greater enrollment and a lower rate of dropouts. There should be a means of checking the rate of progress as criteria for payment. It is as necessary to have money in an institution as it is to have money outside of one. The existing compensation given to youths in the form of the meritorious student allotment is available only to those under thirty.

Awareness

Residents express the desire to be informed of the opportunities for employment that are open to them as ex-offenders. The majority of us are unaware of the possibilities of employment with a felony conviction. We are not informed of nor have any means of acquiring knowledge of job opportunities. The positions open to ex-felons change within the different states.

Vocational Training

The vocational programs offered at Alderson do not enable an inmate to qualify for and compete for a well-paying job. In the business education department, courses in typing and bookkeeping as well as filing are offered. Only the basic skills can be acquired. There is no opportunity for specialization in any field of secretarial work. The average person can type a page. What the offender needs is a chance to specialize in any area of office work, such as medical secretary or personal secretary. There is no way to gain the position of an accountant with six weeks of bookkeeping experience. There are inmates working in the accounting departments in institutions, but they are the ones that came to the institution with these skills, not those who need the experience as

part of training in this area. Why take a course that you cannot use after your release?

The area of vocational training is the one area that the majority of inmates look to when seeking a means of being self-supporting upon their release. Inmates, with a record, know that the chances of finding employment are less than half of what they would be if they do not have some type of skill. The vocational training programs offered at Alderson are so limited in variety that only a few of the resident population are able to find a program that they would be able to utilize upon release.

Inmates want training in skills with which they will be able to obtain employment in the areas to which they will be returning upon release. They want skills, not basics. The society in which we live today demands that you have a trade of some type. In institutions, the skills offered, of which there are too few, either cannot be useful, (the cosmotology course at Alderson is useless, because in most states an ex-felon cannot obtain a license) or they are useful in only a few areas of the country (the training obtained in the Garment Factory at Alderson is useful to those who live in the eastern part of the country around New York State where there is a garment industry). The food service area in institutions is an area that can be more useful than it is. In this area there are many possibilities of a resident gaining useful skills in food preparation as well as dietary knowledge. The skills offered to inmates in this area are cleaning tables and peeling vegetables. The compensation for working in the food service area is less than that of other areas. The staff and administration use the food service area as a means of punishment.

Social Adjustment

Social education is an area in which I feel there should be more emphasis. Having the ability to deal with personal and social problems is necessary if a person is to live a productive life. Adjustment back into society is very difficult and should be considered before release. If a person is aware of his personal self, his ability to deal with everyday annoyances and his emotional problems is strengthened. Generally this area is overlooked unless the inmate gets into some type of trouble inside the institution. Yet the overall population has need for some type of socially-orientated education.

Confidence in one's abilities should be stressed and brought out. After being incarcerated for any length of time, it is very easy for an inmate to loose confidence in her abilities. Many offenders return to their same environment and way of life because it is generally felt that: "This is where I am accepted," or "I won't fit in with another group," or "I won't be accepted because I'm an ex-convict". The first time they meet with a challenge, or the least bit of discouragement, they give up and do not try. But if the ex-convict had some type of understanding of the nature of people and why they act as they do, or in the manner they

do, the adjustment back into society would be made a little less painful.

Conclusion

To summarize, the areas that I have mentioned in this work--motivation, educational programs, awareness, vocational training, opportunity, compensation, and social adjustment--are the areas that I feel need to be taken into consideration by the adult basic education in corrections system when planning and executing educational programs for inmates. Offer to the inmates classes that are relevant to the life that they will be returning to. Help them to build within themselves confidence in their own abilities and not to be dependant upon others.

NEW VISTAS THROUGH CORRECTIONAL EDUCATION
INSTITUTIONAL AND COMMUNITY RESOURCES

Russell E. Johnson
Seattle, Washington

Rehabilitation: the bane of every man sentenced to an American penal institution. It took the Western nations two centuries to realize that penitentiaries do not make penitents; it took a generation to appreciate that corrections do not correct. It meant total subjugation to the powers that be. Individuals who themselves sorely lacked any appreciable degree of education were entrusted with the power to further rehabilitate or punish as they saw fit. These goon squad members made themselves further felt in the form of reports which were entered into a man's record. These in turn, were received by the parole board and consequently no action was taken for another year; another year of humiliations and degradation.

And so it is with this insidious lot of diehards, or the old guard that we must contend with, at least for the time being before any measure of success is met with in the field of education. Re-direction starts not with the inmate; it must start with those who supervise the inmates. The incompetent must be weeded out and replaced with men who can be looked up to and respected by those under him. They must be people who the inmate can come to with a problem and endeavor to work out a solution. In other words, a person the inmate can confide in with utmost confidence with the full knowledge that what he says will not be made general knowledge. If rapport such as this can be established, then the task of educating those men to take their rightful places in society and contribute something constructive to that society will be somewhat lessened.

We know that to be successful at any undertaking, whatever it may be, we have to be motivated. This is not an easy thing to accomplish when a person is committed, against his will, to an environment which is detrimental to his well-being. All too often he will take whatever is offered by the institution, if it will expedite his release date, with no intention of following through with it once he is released. This is not because he knows the quality of his instruction and teaching, which all too often was performed by "select" inmates, was of a very low calibre. He might even have paid for the grade the record shows. Nor is it because he has been rejected by his family and friends; it is because he has no real motivation to pursue something that is in his own interest.

It is the experience of this writer that to bring about motivation in the environment that prison affords, something must be known by the instructor about each individual student. To start with, he has been rejected. He probably comes from a loveless and low income family and also a broken family. The cycle is completed in prison where he becomes heavily dependent with all the basic decisions being made for him. His needs for food, medical and dental care, for companionship, shelter, and many

other basic needs are carefully scheduled and supervised. He need not fear the full consequence of inept decisions he may make. Nor will his failures or inadequacies produce the kind of deprivations and distress likely to attend him in the outside world. With this in mind we can now turn our full attention to the educational needs of the offender.

The dedicated instructor, who can look at the offender as a student truly interested in preparing himself to re-enter the mainstream of life, is one of the prerequisites of foremost importance. Without this quality, the inmate will in short order find out for himself that his chances for success are considerably lessened.

The offender student knows of his ignorance. He knows he is a misfit who finds it difficult to appreciate the benefits of knowledge and the joy of learning, so from the very beginning he should be told of his mistakes. He should, at the same time, be told of what he can do, such as; "your efforts are obvious," or "I know you can do better." These men gobble up such simple compliments, and in short order the offender will readily accept whatever challenges his new found ability. His desire to cheat will be almost nil. We can't overlook the human element inherent in all of us.

While the aptitude test is helpful, it should not be relied upon altogether in helping the inmate determine which courses best suit him. Here again he must be led to believe that he is making the final decision as to his future. It would be advisable to inform him at this time that the option is his if he so desires to change his electives. Without this knowledge he could develop a feeling of being up tight, and if this should happen, the feeling of failure will once again rest heavy on his mind. This cannot be permitted to happen as other inmates will be watching his progress, and the thought of pressure is enough to cause these men to reject the opportunities open to them. The re-introduction of pressure into his life must be gradual, and rather than admit to such a weakness he will dream up any alibi to justify his dropping out, or, if not so extreme, it will certainly slow his progress.

Living conditions should be isolated from the rest of the population, and preferably in a minimum security atmosphere similar to what we have in Washington State--which makes for an ideal environment. This can create resentment among the inside residents as there will be some with considerable time to do, such as lifers, who may be logical candidates for such a program. It can also stimulate those on the inside to reconsider their attitudes in general, and their attitudes toward such a bold program.

I might also suggest at this time that correspondence courses might be offered to those less fortunate on the inside. In doing this the inside resident could better prepare himself for what he will pursue on the main program. The enthusiasm will not be as great, nor will the competition, but for those who would take advantage of such a program their capacity would be enhanced considerably. It would improve their chances to take part in the major program at an earlier date, and their goal would be reached sooner. This would open the door to further studies if the

amount of time to serve allows.

This takes us into still another aspect of such a program, and that is the area of continuing studies--and why not. At this stage considerable money has been spent on the student, and further studies, if it is warranted, would cost less, be accomplished sooner, and the government would be repaid sooner in the form of larger tax premiums. The student would also be more confident and more competitive. More often than not this would have to be accomplished after our man is released. Some of the cost would be borne by his working part-time or whatever, but I firmly believe this should be explored and seriously considered. Fathom the headlines if you will, "Former inmate heads G.M. or Dupont."

All joking aside, the job ahead in undertaking such a program is beyond my comprehension, but I know it can and will be accomplished. The entire world is going through a change and it's a change for the better and long overdue. A change in the penal system of this country is no exception. A change in the penal system of this country will accomplish more through education than any other program ever instituted, and this includes the current pre-release and work release programs.

It is beyond my wildest imaginations why such programs were not introduced many years ago. After I left the county jail and entered the State Prison, and I still considered myself an outsider at the time, the very first thing that struck me, the first thing I thought, and I told this to my counselor at the time and he fully agreed, was the feeling I had that everyone was searching for love. I could feel it all around me. It is my opinion that the success of this program, and it will be in spite of all the negative hash-slinging, accusations, will be due to that one concept which is so inherent in each and every one of us.

DEFINING GOALS, SUBGOALS, AND OBJECTIVES

(4.0)

CONTINUED

2 OF 7

Introduction

> The goals and objectives you develop must reflect both the philosophy and needs of your institution.
>
> Kenneth W. Hayball

When a real life environment has been analyzed, the philosophy established, and both compared to indicate needs, the goals, subgoals, and objectives can be defined to meet these assessed needs. This function, defining goals, subgoals, and objectives "is one of the most critical elements in the adult basic education in corrections system (Ryan, et al., 1975, p. 57)." If goals, subgoals, and objectives are not formulated to meet the assessed and unique offender and organizational needs of the specific institution, the program is most likely doomed to failure.

The first step in defining goals, subgoals, and objectives is to develop a clear and precise understanding of the concepts of goal, subgoal, and objective. Hayball is of great value here. The purpose of his paper is to:

> examine the meaning and relationship of goals and objectives and establish some fundamental principles necessary in setting goals and objectives for instructional systems in a correctional setting (p.175).

Hayball first defines the concepts, then proceeds to discuss the major goals of adult basic education in corrections: self-realization, civic responsibility, economic efficiency, and social relationships. He also discusses ways of setting and developing subgoals and behavioral objectives.

Marsing continues by discussing a procedure for setting and refining behavioral objectives and the role to be played by the instructional system manager in this activity. He also presents a general model of an instructional system which readers should find very useful.

Hinder's paper completes this section on defining goals, subgoals, and objectives. He discusses how noise, motivation, direction, and evaluation factors must be given special consideration when formulating objectives for an adult education program. Hinders also discusses the three levels of goals within each program: management, instructor, and learner; as well as how and when inmates themselves can be an integral part of a goal setting team.

Reference

Ryan, T. A., Clark, D., Hatrak, R., Hinders, D., Keeney, J., Oresic, J., Orrell, J., Sessions, A., Streed, J., & Wells, H. G. Model of adult basic education in corrections. Honolulu: University of Hawaii, 1975.

SETTING GOALS AND OBJECTIVES FOR INSTRUCTIONAL SYSTEMS FOR ADULT BASIC EDUCATION IN CORRECTIONS

Keith W. Hayball
California Department of Corrections
Sacramento, California

The instructional process is the very root of the larger educational process in a correctional setting and as such demands a careful, consistent, continuous examination by the staff and learners. Why are some education and training programs successful while others fail? Why do the learners clamor for certain classes and instructors, and refuse others? A part of the solution lies with the instructor, yet a formidable portion rests with the prison, its philosophy and needs. Some institutions have stated philosophy upon which the staff agree, yet this is as far as it seems to go. The philosophy is not implemented into the institutional programs and remains a vaguely printed statement that is periodically taken out, dusted off and carefully placed back into its specified recess. Some institutions have gone a step further and developed a statement of needs based upon their philosophy. A few institutions have gone even further and developed and implemented goals and objectives geared to actually achieve their institution's philosophies and needs.

The purpose of this paper is to examine the meaning and relationship of goals and objectives, and establish some fundamental principles necessary in setting goals and objectives for instructional systems in a correctional setting. The design of this paper will focus on the four major goals of adult basic education in corrections formulated by a committee of 100 (Ryan and Silvern, 1970). The concern of this paper is directed toward the offender. If the offender/learner is to benefit from the instructional system, its goal and objectives must be specific in intent, pertinent as perceived by the offender/learner, attainable, measurable, and observable. Without meeting these criteria the instructional system and its goals and objectives are futile and of no consequence.

Goals and Objectives Defined

What exactly do we mean by goals and objectives and what relationship if any exist between these, the instructional system and your institution's philosophy and needs? As noted previously, goals and objectives are the sequential steps necessary to achieve a given philosophy and satisfy established needs. The goals and objectives you develop must reflect both the philosophy and needs of your institution. The necessity for having clearly stated goals and objectives according to Mager (1962) is that one must know where he is going (goal) and how to get there (objectives), for if he is not sure where he is going and how he is to get there, he is liable to end up someplace else.

Goals

Goals as defined by Ryan (1970) are a collection of words or symbols describing general intentions or expected outcomes. Goals are generally characterised by their broadness in intent and scope. Goals cover wide areas and are not precisely defined. One usually has this broadness in mind when he undertakes a task, however his failure is often because he has not stated it clearly. It remains more of a mental image, as an example, one who remodels his home without a prepared plan or design, including specifications, has a goal but it is not clearly stated. As a result he may not achieve the remodeling expected and the remodeling may be disappointing or chaotic.

Objectives

An objective, according to Mager (1962), is an intent communicated by a statement describing a proposed change in the learner; a statement of what the learner is to be like when he has successfully completed a learning experience. It is a blue print or description of a pattern of behavior (performance) we want the learner to be able to demonstrate. It seems that far too often in corrections, objectives are described as what is desired rather than what must be accomplished.

Thus we find that a carefully developed statement of philosophy for any given correctional institution will yield specific needs for this institution's offender/learners. These needs once refined become instructional goals. The goals may be readily translated into instructional objectives. Mager (1962) points out that once an instructor decides to teach his students something, several activities are necessary on his part if he hopes to succeed. First, he must decide upon the goal he intends to reach upon completion of the program, course, or unit of instruction. He then must carefully select procedures, content, and methods significant to the objectives. Secondly, he must cause the student to interact with select subject matter in accordance with learning principles. Finally, he must evaluate or measure the students peformance according to the objectives and goals originally selected.

Mager (1962) cautions that when clearly defined goals are lacking, it is not possible to evaluate or measure the course or program efficiently, and there is no sound basis for selecting adequate materials, content, or methodology. If an instructor finds himself lost in an instructional quagmire he cannot hope to help himself until he knows just what it is he wants his students to be able to do at the end of the instruction.

It should be noted that clear, concise, goals must be readily understood by both the instructor and the learner if the testing process is to be able to reflect the degree the student has been able to achieve the course objective. If the goals are clear and concise the learner has opportunity to measure his own progress at any point along the way and has the option of organizing his efforts towards that part of the instruction that he feels important and valid thus increasing student self-reliance, initiative, and effort.

Goals of Adult Basic Education in Corrections

The four goals of self-realization, civic responsibility, economic efficiency, and social relationships were formulated by a select committee of one hundred in 1969 at Arlington Heights, Illinois. One hundred participants representing leadership roles in education, corrections, government, business, industry, labor, community and social services and behavioral and social services comprised this important committee. Self-realization is the central element which interacts with others. These goals as noted by Ryan and Silvern (1970) are broad in scope and represent a framework from which to form subgoals fitting your local institutional philosophy and needs. The fundamental importance of these goals and their impact upon the instructional system warrants their careful definition according to the findings of the committee of one hundred.

Self-realization

When terms are broad we tend to ask ourselves what do they mean? What is meant by self-realization and how can one possibly go about setting sub-goals and objectives for an instructiona system that will relate to the offender/learner? The definition is simple. The application will prove to be most challenging and rewarding. Self-realization is the acquisition of basic knowledge about health, leisure time, the development of communication and computational skills necessary to generate feelings of self commensurate with his abilities.

Civic Responsibility

Civic responsibility is the achievement of awareness of relationships and participation in neighborhood and local community issues, awareness of political issues at local, county, state, and national levels, and the respect for the rights and property of others.

Economic Efficiency

Economic efficiency is the development of financial management, and support of self and dependents at a living standard above the poverty level, satisfying to the individual with minimal or no assistance from private or public agencies.

Social Relationships

Social relationships is the goal concerned with the development of understanding and the ability to cope with situations, and relate to other human beings in terms of the realities and expectations and standards of society.

These broad goals of adult basic education in corrections provide

us with a way to implement correctional philosophy into practice. The paramount concern of adult basic education in corrections according to Ryan (1970) is to provide the knowledge, skills, and attitudes needed by the offender to enable him to compete as an economically efficient, civically responsible, socially competent person who has developed self-realization.

Setting and Developing Subgoals and Behavioral Objectives

The four goals previously considered are in fact statements of purpose. They prescribe the many subgoals and behavioral changes we need to carefully consider and implement in correctional education.

Subgoals

Each institution must develop as many subgoals as necessary to fit that institution's philosophy and needs. These subgoals may become the curriculum for the administrator or may be expressed in specific courses for the instructor. As an example, utilizing the major goal of self-realization, a series of subgoals are possible. Some suggested subgoals might include: (1) to demonstrate mental maturity, (2) to improve academic skills of communications, (3) to improve skills of computation and reading, (4) to demonstrate ability to make a decision and keep it. The reader will quickly note these subgoals are still too broad, too vague to be of any practical use in the instructional system. What is needed is a method of specifying exactly what terminal outcome will be necessary if a subgoal is to be attained. Ryan and Silvern (1970) say that in order to have an effective system of education, general goals and subgoals must be further translated into behaviorally defined objectives or changes.

Behavioral Objectives

We need a description of what the learner will actually be doing and what the terminal behavior will be. This description becomes a behavioral objective. In preparing objectives care must be taken to eliminate loaded words or words open to a wide range of interpretation. Mager (1962) indicates that words such as: to know, to understand, to appreciate, to enjoy, to believe, are words open to many interpretations and can have many meanings. Writing effective behavioral objectives will take time and practice.

As an example, using self-realization as a major goal, and a subgoal to develop communication skills, the behavioral objective might be as follows:

Major Goal: Self-Realization
Subgoal: To develop communication skills
Behavioral Objective: Instructional
Given a learner at less than 4.9 achievement

> measured by the Elementary Achievement Test and given three different job application forms, including information on experience, training and education the learner will after 120 hours of basic communication skills be able to complete all forms with 80 percent accuracy as determined by the teacher and the vocational counselor.

In analyzing this objective we easily identify the learner, where he is at regarding achievement, what it is we expect him to be able to do after a specified instructional period. We also know who will make the evaluation and how it will be made. All behavioral objectives must be carefully constructed in order to pass a rigid quality control test.

Evaluation of Behavioral or Performance Objectives

Realizing the futility evolving from a possible hodgepodge of ill-prepared performance objectives, Ryan in 1970, developed a simple, clear, and concise test that provides the quality control so necessary. The SPAMO test is derived from five words: Specific, Pertinent, Attainable, Measurable, and Observable. Let us examine briefly the SPAMO assessment.

Specific

The learner should know more than he did before. He should understand something he did not understand before. He should have developed a skill that was not there before. He should feel differently about a subject than he did before. Unless your objective is specific in what it hopes to achieve it will not pass the test.

Pertinent

The behavioral objective should be pertinent as perceived by the learners.

Attainable

All objectives must be written realistically and in accordance with the level of progress of the learners.

Measurable

A means of measurement must be provided. If it cannot be measured then it cannot be determined whether or not the terminal behavior has been achieved.

Observable

If it cannot be observed how can it be determined if what was hoped for has been attained?

In summary, an institution's philosophy and needs will determine that institution's goals, subgoals, and behavioral or performance objectives. How well these goals match the goals of adult basic education in corrections depends upon the interpretation given by staff. How effective the behavioral or performance objectives are depends upon the time, effort, training, and care of staff. It is important to note that desired changes in educationally handicapped offenders will not transpire without the addition of trained personnel and the development of unified educational plans or goals.

References

French, W. Organization development objectives, assumptions and strategies. California Management Review, 1969, XII (2).

Glaser, D. The effectiveness of a prison and parole system. Indianapolis: Bobbs-Merrill, 1964.

Hurst, J. To humanize education. Ed Centric Center for Educational Reform, 1971, III (3).

Huston, T. Prison within the prison: A look at education behind bars. Ed Centric Center for Educational Reform, 1971, III (5).

Knowles, M. S. The modern practice of adult education. New York: Association Press, 1970.

Long, K. K. Transfer from teaching to learning. Journal of Educational Psychology, April 1971.

Mager, R. F. Developing attitudes toward learning. Palo Alto: Fearon Publishers, 1968.

Mager, R. F. Preparing instructional objectives. Palo Alto: Fearon Publishers, 1968.

Mager, R. F., & Beach, K. M. Developing vocational instruction. Palo Alto: Fearon Publishers, 1967.

Mager, R. F., & Pipe, P. Analyzing performance problems. Palo Alto: Fearon Publishers, 1970.

Popham, W. J., & Baker, E. L. Establishing instructional goals. Englewood Cliffs, N.J.: Prentice-Hall, 1970.

Ryan, T., Clark, D., Hatrak, R. S., Hinders, D., Keeney, J. C. V.,

Oresic, J., Orrell, J. B., Sessions, A. B., & Streed, J. L. Model of adult basic education in corrections. Honolulu: Education Research and Development Center, University of Hawaii, 1970.

Ryan, T. A., & Silvern, L. C. (Eds.). Goals of adult basic education in corrections. Honolulu: Education Research and Development Center, University of Hawaii, 1970.

Varney, G. H. Management by objectives: Making it work. American Management, January 1972.

SETTING GOALS AND OBJECTIVES FOR INSTRUCTIONAL SYSTEMS OF ADULT BASIC EDUCATION IN CORRECTIONS

Boyd Marsing
Nevada State Prison
Carson City, Nevada

It is the primary purpose of this paper to explore a procedure for setting and refining behavioral objectives and criterion levels of performance by an instructional system manager. This manager may be a vocational instructor, recreation officer, or classroom teacher. It is a secondary purpose to review goals, subgoals, and behavioral objectives that have been established for adult basic education in corrections (Ryan and Silvern, 1970) and to show how they are handled by top level management, mid-level management, and the instructional system manager.

Goals and Subgoals

The four major goals of adult basic education in corrections formulated by a committee of 100 (Ryan and Silvern, 1970) are economic efficiency, civic responsibility, social relationships, and self-realization. These four major goals are broad in scope and are generally consistent with the goals in a corrections institution as set down by top level management.

Subgoals are established by top and mid-level management and are primarily handled by mid-level management. In general, any definable area of training or treatment that occurs in a corrections setting can be described by a subgoal. Each instructional system manager, therefore, operates with a basic subgoal established by mid-level management, but the actual operation of the system becomes more sophisticated with the establishment of behavioral objectives.

Behavioral Objectives and the Instructional System Manager

It is generally agreed that the operation of a single instructional system can best be operated and evaluated when the desired terminal performances are described in terms of behavioral objectives.

A behavioral objective must describe the act that the participant or learner will be doing and what the terminal behavior will be. The following is an example of a behavioral objective in a recreation program: The participant will be able to run one mile in less than seven minutes as demonstrated by running twenty laps inside the gymnasium under time conditions. Notice that the above objective (1) identifies and names the act to be performed, (2) describes the conditions, (3) determines the limitations and constraints, and (4) dictates the acceptable level of performance.

Additionally, Ryan (1971) recommends that behavioral objectives be evaluated against the SPAMO test which assesses the extent to which the objective is (1) specific, (2) pertinent, (3) attainable, (4) measurable, and (5) observable. If these criteria are met when specifying behavioral objectives, the likelihood of attaining a stated goal is increased.

Once the behavioral objective is stated the instructional systems manager describes a procedure or daily activity whereby the participant can achieve the behavioral objective. This is generally done on an individual basis and is modified if the behavioral objective is not achieved by the activities initially assigned.

A Model Instructional System

The following is a general model of an instructional system. The system can be easily flow-charted, but the reader will be spared further confusion on that topic. The model has the following steps from flow-chart:

1. Consider subgoal of instructional system.
2. Establish behavioral outcomes of unit of instruction.
3. Set criterion levels for participants.
4. Assign points to each component of the unit based on criterion level.
5. Write behavioral objectives.
6. Administer pre-test.
7. Implement the program with student activity and log student hours.
8. Evaluate students after thirty instructional hours, based on progress toward criterion level.
9. Project student hours needed to reach criterion level.
10. Evaluate total program.

The example for this model is a comprehensive physical fitness unit for youthful offenders. The behaviorally stated subgoals are:

1. The participant will run three miles non-stop in less than twenty-five minutes, twice a week.
2. The participants will be able to bench-press (three sets of ten repetition) an amount equal to his body weight and do four other weight exercises proportional to this amount.

Few constraints are placed on these objectives since it is individualized and open-ended. The instructor assigns an arbitrary point system to the criterion level of all five factors and administers a pre-test to each participant. After thirty hours are logged, the instructor has a great deal of data to evaluate each student and to evaluate the program in general. The instructor also has the quantitative information needed to project the number of hours necessary for each student to reach criterion level.

One of the keys to the above general model is that an evaluation comes quite soon after implementation. This is considered the most important evaluation and contributes a great deal to student and instructor motivation.

The general model from which this example comes has the following advantages:

1. It is individualized.

2. It motivates evaluation by the system manager.

3. Progress toward criterion level is quantitative and meaningful to the participant.

4. The evaluation projects completion date at criterion level.

5. The system is easily adaptable or adoptable to nearly all instructional areas.

The general system designed by Mack (1971) was, in fact, designed for a unit quite remote from recreation. It was developed for a standard English program with these four components: silent reading, oral reading, writing and listening. Mack was able to establish a criterion level in all four areas and evaluate very effectively in the manner previously described. The major difference in the standard English and the recreation programs is the sophistication of student activities in the standard English unit. The model remains unchanged in nearly every adaptation. The system manager need only prescribe the activity for which he is professionally trained or experienced, based on established behavioral objectives.

Conclusion

The manager of an instructional system must be aware of the four major goals of adult basic education in corrections, be able to write at least one subgoal applicable to his instructional area, and be able to describe his program behaviorally.

Additionally, it is hoped that the instructor will be able to formulate a model whereby he can independently run a system if direction from mid-level and top level management is not immediately forthcoming.

If this direction is forthcoming the instructional system manager should be able to operate within the overall model of adult basic education in corrections.

References

Mack, R. A. Model - Standard English TRAM. Unpublished paper written at TESOL Institute, University of Wisconsin, Milwaukee, 1971.

Ryan, T. A. Model of adult basic education in corrections (Experimental ed.). Honolulu: Education Research and Development Center, University of Hawaii, 1971.

Ryan, T. A., & Silvern, L. C. (Eds.). Goals of adult basic education in corrections. Honolulu: Education Research and Development Center, University of Hawaii, 1970.

GOALS AND OBJECTIVES IN CORRECTIONAL EDUCATION

Dean Hinders
South Dakota State Penitentiary
Sioux Falls, South Dakota

"Going to California? Don't head east then."

A direction like that would help if you were in the United States (except for Hawaii, that is). But most persons would need more specific directions to get to a definite place. Robert F. Mager (1968) states it this way: "If you're not sure where you're going, you're liable to end up someplace else."

"Every society has used adult-education processes to continue the development of the kind of citizens visualized to be required for the maintenance and progress of that society (Knowles, 1970)." This author goes on to say,

> The evidence is mounting that man's ability to cope with his changing world is lagging farther and farther behind the changing world. The only hope now seems to be a crash program to re-tool the present condition of perpetual change (Knowles, 1970).

Correctional education is no different. Because of the forced isolation of its clientele, Knowles' statements are extremely relevant to prisons today. Offenders and staff alike desire that the end result of prison sentences will be more socially acceptable lives outside the walls. Positive attitudes can be developed in institutions but there needs to be specificity of goals. "We can not only aim for an objective and act to achieve it, but we can evaluate our success in achieving the objective (Mager, 1968)."

It is necessary to have broad goals and then to break these down into steps called behavioral objectives. T. A. Ryan (1970) recommends that behavioral objectives be evaluated against five criteria through a "SPAMO" test. This quality test of goals is an assessment of the extent to which the objectives are (1) specific, (2) pertinent, (3) attainable, (4) measurable, and (5) observable. If these criteria are met when specifying behavioral objectives, the likelihood of attaining a stated goal is increased.

Goals and objectives must be given special consideration in correctional education because of these reasons: (1) NOISE, (2) MOTIVATION, (3) DIRECTION, and (4) EVALUTATION.

NOISE involves both physical and emotional distractions. Adults are less tolerant of high noise levels; programs must be planned accordingly. Emotional distractions must not be discounted. It does no good

to talk to a learner about fractions if his mind is clouded by disturbing news from home or whether or not he will make parole this month. It would be better to help him set him mind to the task at hand first.

Adults need goal orientation for MOTIVATION. Offenders have been failure oriented for so long that they need short specific tasks and immediate evaluation to show success possibilities. For them to look several years ahead at completing a high school education would be illogical. To be able to learn enough about fractions to read gauges in the auto shop is realistic to the potential mechanic. Once one goal is successfully attained it will be easier for him to reach for the next higher one.

Giving DIRECTION to offenders is important because they are not known for their positive goal setting ability. Assistance in setting and carrying through with short-term, logical goals is a step in expanding the offenders horizon of positive possibilities.

The educational administrator must have some way of EVALUATING the program. With goals and peformance objectives clearly stated, program guidelines will have already been drawn. Then action can be initiated to carry these out with details being adjusted as the feedback arrives.

Lest the issues be confused, there are different levels of goals within each program: (1) MANAGEMENT or total program goals, (2) INSTRUCTOR or classroom goals geared to group or individual performance, and (3) LEARNER goals that are usually oriented to skill acquisition. Attitudinal change is an outcome of activity but is not generally planned for by the learner.

How to arrive at the three levels of goals is a heated issue in corrections today. Glaser (1971) indicates that it must be a joint effort with staff and offenders.

> Research has repeatedly demonstrated that social separation of staff and inmates increases prisoner acceptance of anti-staff values. There are many aspects of prison management--including food service planning, recreation program planning, safety programs, building maintenance, landscaping and numerous other activities--where elected inmate representatives can participate as individuals on committees with staff. There need be no risks in this, only benefits for rehabilitation and for morale.

J. B. Crook, wirting in The Messenger, a prison publication, says this:

> The pressure to conform to the point of becoming a non-person is very strong and comes both from the administration and the inmate body. Since nearly all choices are regulated by the administration and the ability to make intelligent choices is a necessary capacity in any outside society, the inmate is handicapped in this area.

This merely points to the fact that involvement in decisions increases morale, as well in involvement in the success of the program. Decision involvement must be present but the desired results can be achieved better on an informal basis that lessens pressure hang-ups. The difficulty that lies in a non-formal program is that the staff must know what is to be accomplished and how. Hence, the need for clearly stated arrival points.

All three levels of goal setters should view objectives not as barriers, but as stepping stone measurements to success. What success? That depends upon you.

WHERE ARE YOU ARRIVING?

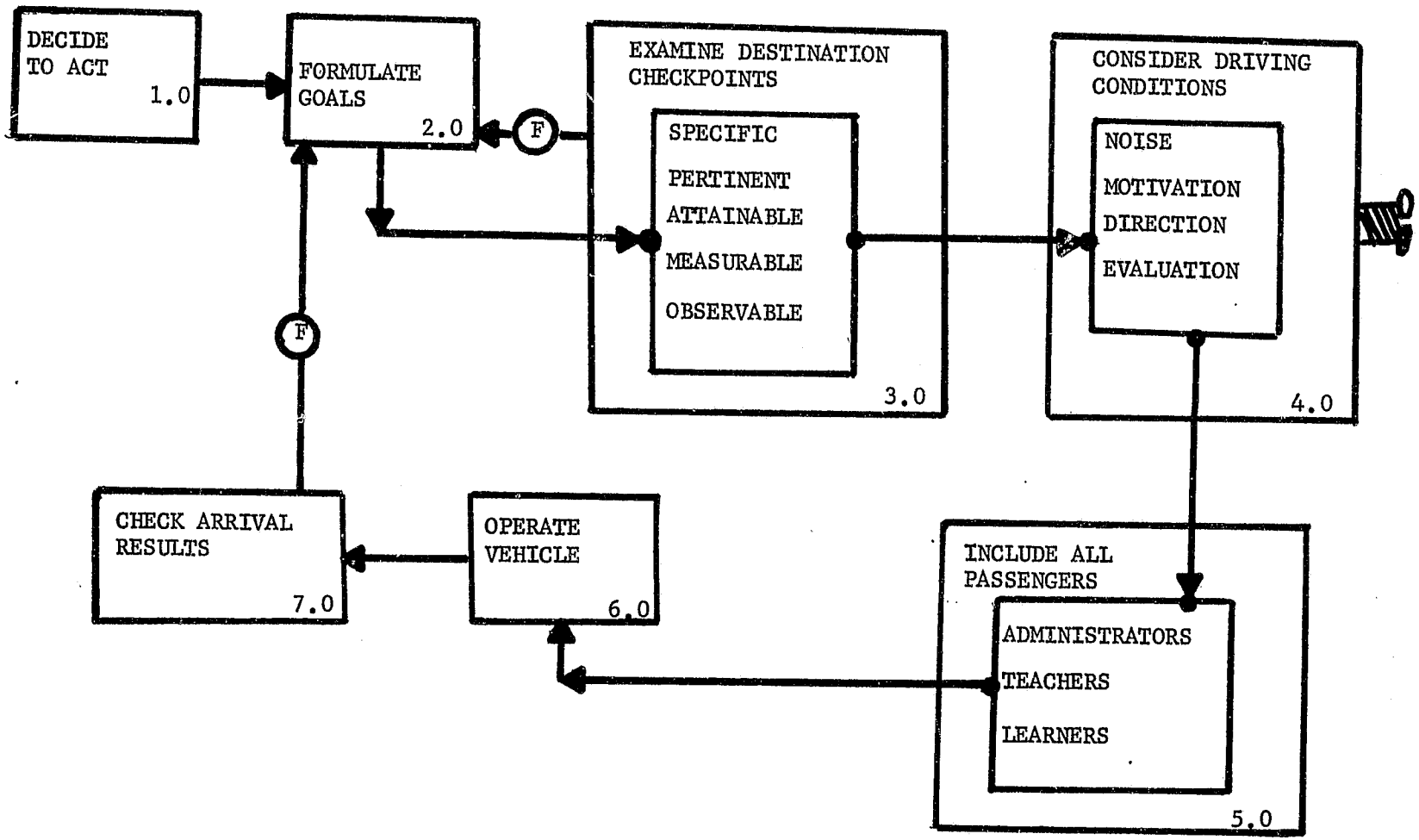

Figure 1. TRIPTIK

References

Crook, J. B. An open letter to the pardon board. The Messenger, 1971, LVI, 4.

Glaser, D. Politicalization of prisoners: A new challenge to American penology. American Journal of Corrections, 1971, XXXIII, 6-9.

Knowles, M. S. The modern practice of adult education. New York: Association Press, 1970.

Mager, R. F. Developing attitudes toward learning. Palo Alto: Fearon Publishers, 1968.

Ryan, T. A. Recorder's report. Minutes of presentation by Dr. Ryan on writing behavioral objectives, San Dimas, California, 1970.

FORMULATING A PLAN

(5.0)

Introduction

Formulating a plan is a very critical function in designing an adult basic education program. It sets the directions and limits for the actual program which will be designed in the next step (Step 6). The five processes involved in formulating a plan are: (a) stating the mission and parameters, (b) analyzing constraints and resources, (c) synthesizing possible solutions, (d) modeling/simulating to evaluate solutions, and (e) selecting the best solution.

A paper by Richard Cortright introduces this section by discussing some of the general aspects of adult basic education which should be considered when developing a delivery system in any corrections institution or agency. These include such aspects of adult basic education programs as the need for innovative programs, the need to match teachers and learners, the advantages of using teachers' aides, and even, the need for those persons to resign who are not firm believers in the need for and effectiveness of correctional work.

Baker, in "Designing an Effective Adult Basic Education Program for Corrections," explains some of the factors to be considered when establishing the parameters. He discusses student and staff characteristics. He also lists and discusses some of the factors which should be analyzed when considering constraints and resources: materials, type of instruction, and media, as well as why these need be considered.

Cleavinger, in his paper, also discusses some of the various aspects that should be considered when designing an adult basic education program. He cites such factors as available facilities, offender characteristics, philosophy, budget, and the surrounding community. Cleavinger ends with a brief discussion of several principles of curriculum building which should be taken into consideration when determining or selecting the best plan or solution to be utilized.

Cassell's paper continues in somewhat the same vein by discussing what should be taken into consideration in determining the most viable solution. He discusses learning environment factors as well as possible roles for a classroom manager.

Concluding this section is Reed's paper. Reed emphasizes the responsibility to bring about change on the part of those working in corrections. Those responsible for formulating a plan to bring about change in a particular institution need to compare expectations with available resources in and around the institution. He comments on the steps to take in reviewing resources, and, what resources to review. Reed focuses on the need, when formulating a plan, to "examine very carefully the alternative ways that may be employed, and (to) chart the most effective course of action (p.224)."

FOCUS ON THE FUTURE:
FUTUROLOGY FOR CORRECTIONAL EDUCATION

Richard W. Cortright
National Education Association
Washington, D. C.

When I told a colleague that I was going to Indiana to speak about correctional education, he said, "What do you know about the special education of children?"

I said, "What do you mean?"

"Didn't you say corrective education?"

"No, no. Not the physically handicapped. This is correctional education. Prisons."

I wonder if it was just a mis-hearing or whether many people think of correctional education in the same way.

Crime marches on in America. Adult and juvenile crime and delinquency are on the increase. Perhaps two million children "come to the attention" of the police annually. Who knows how many do not? A half million cases are handled by the juvenile courts each year. About a million and a half others which do come before the police are disposed of without penal proceedings. About one person in every six who is arrested is under 21 year of age.

As professionals, you know these facts, but even the laymen has some notion of the extent of crime and delinquency. After all, a daily reader of the morning paper can hardly help but be aware of crime in metropolitan America. For example, shortly before Christmas, the Washington Post ran on one page stories under the following captions: "Ex-Convict Fears Criminal Past," "District Court to Settle FBI Record Case," "Drug Case Juror is Arrested," "Threat Halts Demolition of N. W. Building," "Jury Selected for Comeau Trial in Mattingly Death," "High's Store Plagues in Rash of Robberies During November."

Educational programs in penal institutions, and specifically adult basic eduation (ABE) programs help to reduce recidivism and thereby reduce crime. I do not need to review the history of, or the current status of ABE. You know, for example, about the ABE demonstration projects on:

Training to develop employability among mentally retarded inmates to institutions;

Using college students from poverty areas as teachers of adult basic education to teach illiterate residents of mountain areas in Appalachia;

Recruiting and instructing paraprofessionals to assist a Negro inner-city community to raise its educational level;

Producing a film and series of instructional guides for teacher-training in ghetto areas;

Measuring effects of adult basic and social education programs on post-release adjustment and educational achievement of inmates of correctional institutions.

However, let me sketch a profile of the typical ABE person--nationally--so that you can compare your own ABE students with him:

White (56.6 per cent), female (56.1 per cent), with a family income under $3,000 per year (44.5 per cent), employed (55 per cent), between 24 and 44 years of age (46.5 per cent). Grade levels between first to third grade classes (26.7 per cent), fourth to sixth grade classes (33.6 per cent), and seventh or eighth grade classes (39.7 per cent) (Cortright, 1970, p. 63; see also Attwood, 1970).

This profile suggests that the problem of illiteracy in the United States will remain a major socio-economic problem for years to come--perhaps decades. Illiteracy results in reduced national wealth, social and cultural lags, weakened national security, slowed technological progress, hastened displacement of workers, lowered production, slowed economic growth, weakened democracy, and retarded world understanding and cooperation. Many Americans, however, still do not realize that millions of other Americans cannot read a daily newspaper, a weekly magazine, the Bible, or a paperback novel. These are the adults who for one of several reasons are the adult functional illiterates in the United States.

The adult functional illiterate is a "social isolate;" he is cut off from the mainstream of society. Illiteracy itself is a "social deficit." The illiterate bypasses the age of the printed page as he moves into the age of the mass media. He is like the illiterate Asian or African who, in the twentieth century, is beginning to learn about jets or missiles while his nation is actually still in the sixteenth century.

Many inmates are adult functional illiterates. In federal prisons, about eleven percent of the nearly 21,000 inmates are considered illiterate (below grade 6.0). On a given day about 1,500 inmates are attending classes. Another 1,500 inmates are attending high school classes, and about 1,000 are attending GED preparatory classes (see Carpenter, 1971). One correctional educator recently told me, however, that only three percent of all inmates may be taking part in educational programs in penal institutions.

The public schools are trying out a variety of programs to bring back school dropouts, those under-educated young adults from whom an overly large number of lawbreakers come. For example, in Las Vegas, Valley High School (now called Urban High) has been designed to meet

the specific needs of the students of that unique community by catering to the dropouts, chronic truants, erstwhile lawbreakers, and bright ordinary kids disenchanted with day school. Reports from Las Vegas indicate that students who hold down full-time jobs in the show and gambling businesses are succeeding at Urban High. Why not utilize the school facilities this way, cut down costs, and use this evidence to sell the public on voting bond issues? And, since dropouts are sometimes prone to commit crimes, thereby cut down on crime?

Two incidents come to mind when I think about correctional education, both from Asia. A few years ago I was working in the Philippines and went to a prison in the Manila area to test some new adult basic education materials in the Tagalog and Ilocano languages. The warden was friendly and took our group on a tour. As we climbed the stairs in one block I read a series of signs, carefully hand-printed and attached in ascending order: "Be Quiet--Don't Smoke--Keep Clean--Don't Steal." That was learning to read by the looksay method. The warden did not comment on its effectiveness.

Another incident took place in Pakistan. I was involved in a teacher training program and wanted to involve teachers from the provincial prison. So off to the warden--and this time he took us on a tour, gradually leading us to what he felt was the most important part of the prison. The cells, the furniture, the fresh air, the books, and the execution chamber. He was very proud of the scaffold and insisted that punishment was dispatched with alacrity.

These incidents come back to mind whenever I think about correctional education. I suppose the first one was an example of poor pedagogy, but at least it was an attempt to use written communication to communicate. And the second, well, that was correctional education in which the correction was made permanent like the correction fluid which typists use to correct (obliterate) a mistake. Is that what many people still believe "correctional education" to be?

To most laymen the problem of correctional education is probably simple. Either:

1. Correct (obliterate) the inmate;
2. Correct (keep him where he is--physically and mentally);
3. Correct (show him his mistake and help him to rectify it).

I should suppose most of us accept point three--and we include adult basic education as one way to help the inmate, and thereby society. ABE, federally funded, has been with us long enough to have accumulated a series of myths. Let's dispense with some of the myths about ABE. I would say these are some which are still promulgated:

> ABE teachers are not usually very good. After all, they are just (slightly) warmed-over teachers of children who want to moonlight for a few extra bucks. [See Cortright (1970) for a broader picture].

ABE teachers have few instructional materials which can be used. What we need to do is get the publishers finally to produce some useful materials for adults. [See Ford's (1967) Adult Basic Reading Instruction in the United States for a different point of view].

If only there was some effective training for ABE teachers, they would be prepared to do a good job. Why don't the universities set up short courses and degree programs? [See Luke (1970) for a counter statement].

Adult education is the forgotten part of education. Nobody knows there even is such a program. [See DeCrow (1968) for another point of view].

We know there are good ABE teachers, although some are poor. We know there are many useful ABE materials. We know there have been effective training programs. We know the status of ABE has improved. We know these myths about ABE in the public schools are false. But, are these myths false, also, in the penal institutions? What is the purpose of ABE programs in correctional institutions? To help equip the inmate to function in society? Correctional personnel then also have the responsibility to help make society understand the inmate as a member of society. A warden writes, "Education is one of the most effective tools within a prison in the rehabilitation or treatment program" (Vitek, 1967)." A number of indications from Maryland, Ohio, and Wisconsin point up the fact that with more education, there is less recividism (Cortright, 1965). Inmates can learn to read, reading advances education, and education leads away from recidivism. Does the syllogism need to be clearer?

In the spirit of the third alternative of correctional education (see above), I would like to make a few suggested approaches for your decision-making consideration as you plan to implement your personal management plan--back home. These are the points which I think need special attention in using a systems approach to organize for more effective ABE programs in correctional institutions.

1. Develop innovative programs which make a difference. Learning Systems, Inc. has developed a concept of technical clusters for inmates in West Virginia and Pennsylvania. The concept focuses on an area of industrial arts, such as printing, and brings the teachers together as a team to teach this topic in a 1200-hour mini-project. For example, one mini-project was the production of a booklet on the great religions of the world. Five different teachers, including communication and math teachers, each spent time helping inmates learn what they needed to know in order to produce the booklet. The important part, I think, was the motivation which was generated. There was a need by inmates to learn to write a sentence, count how many copies of booklets might be sold, and find out about job opportunities which might be available at the time of release so that they would have a handle on a tangible occupation.

Another means of motivation (Mauk, 1970) was to use a financial incentive. If a person has completed elementary school, his expected lifetime income is $277,000. If he completes high school he is likely to add $94,000, bringing his lifetime income up to $371,000. Four years of college should add another $213,000, bringing income to $584,000.

What innovations have been successfully used to motivate inmates to complete an ABE program? Most wardens with any tenure at all have their favorite stories about Inmate Y or Inmate Z who was released, became successful in readjusting to the outside world, and sent back a Christmas card. He made it. Surely that evidence, although sparse, is welcome. However, what happened to all of the other released inmates? To what extent did the educational experiences in prison help them? In other words, what research facts do we have? I would suggest, as part of the delivery system which you are developing, a careful examination of this question. This research might begin with the recidivists. Did the ABE program which Inmate X receive help him? Evidently not, since he returned. But why not? If we do not measure, in some way, our programs, how can we know if we have been effective? Correctional education goes on all the time in prisons and penitentiaries and jails. The point is not that there is no education in Prison P; the problem is that there may be too much education--of the wrong kind.

2. Match teacher and learner--for compatability. After all, no one gets along with everyone. A study from Ontario indicates that scores on hidden figure tests are useful in determining student readiness for group or individual study, as well as the suitability of certain teachers to act as leaders or consultants with certain students. An example of an attempt at better matching is the cooperative training project jointly sponsored by the University of Georgia, Teacher Corps, Georgia Department of Corrections, and the Georgia Department of Education.

Ahlstrom and Havighurst (1971) suggest guidelines for preventing dropouts, those students who provide the potential inmate population.

> Maladjusted students need teachers with endless patience and determination to help them make an adjustment.
>
> Those students who do profit from the work experience owe as much to the inter-personal relationships as to the work skill learned.
>
> Preventive counseling can help students before trouble occurs. Presently, a counselor is brought in only after the damage has been done; and after the immediate trouble is past, the case is dropped.

3. Use volunteer aides. The Psychological Services Center of the Lorton (Virginia) Prison uses volunteer tutors to help illiterate inmates. The National Affiliation for Literary Advance, an organization of volunteer literacy councils, has helped organize volunteer work in Sing Sing Prison, Georgia State Prison (Reidsville), New Jersey State

Prison (Rahway), Jefferson Parrish Prison (Louisiana), Illinois State Penitentiary (Joliet), and the San Antonio County Jail (Texas). I have seen volunteer tutors working with inmates in Walla Walla (Washington) and Auburn (New York). Under direction, the volunteer can help the professional teacher. The fact that the President's National Reading Council plans to enlist hundreds of thousands of volunteer tutors attests to the soundness of using volunteers.

4. Relate ABE with AHE. Recent legislation has supported adult education to the twelfth grade level for adults. When this legislation is funded, there is going to be a large increase in Adult High School Education (AHE) programs. Of course, AHE is not new to inmate education. The Bureau of Prisons estimates over 1,000 GED diplomas issued annually. But we need to move more men and women inmates to the high school level. In fact, after discussion with labor and manpower economists, I am doubly troubled about just how far the eighth grade level gets a person anyway--particularly in terms of job placement. The point now is to interrelate ABE and AHE so that the ABE student is motivated to go the second mile--and get his diploma. This is another reason for a close articulation of inmate education with the public schools.

Make contact with your local director of adult education. Find out how he can help you. The local education association may, through its adult education committee, find a teacher or two who can counsel and/or provide a few volunteer teaching hours. Or, can you pry more funds to hire another adult education teacher on your staff?

5. Let the correctional educators say, "We, too, will be accountable." Good teachers want everyone to know that they are doing a good job and deserve a good salary with appropriate benefits. They want to provide educational experiences for inmates: quality education. Teachers can be accountable. The goal is to establish a (correctional) education profession which determines, abides by, and enforces its own standards. The following contingencies for teacher accountability are adapted from the National Commission on Teacher Education and Professional Standards (1970):

> Clear goals for correctional education, based on both local values and priorities and national purposes.
>
> Acceptance of expert judgment of appropriate teaching and learning to achieve such goals.
>
> An adequate number of personnel with sufficient skills to perform so that accepted goals are achieved.
>
> Provision for identifying, educating, retaining, and continuously re-educating teachers to assure that they will always be up to date.
>
> Teaching loads, time, and support services which are conducive to quality performance.

Appropriate media, materials, facilities, and learning resources.

Satisfactory salaries and welfare programs for teaching personnel.

High morale on the part of those who teach.

Appropriate evaluation of all the goals of instruction--academic, attitudinal, humanistic and behavioral--taking into account that the educational process itself should be highly valued and judged along with learning outcomes.

Leadership in institutions that fosters a wholesome social-psychological setting, an openness to constructive change, and a climate conducive to teacher and student success.

Strong public committment to correctional education expressed in both moral and financial support.

Provision by top administrators and boards of education of material resources, psychological climate, and the freedom needed to ensure top performance by both teachers and students.

Of course, the profession has not achieved this level of performance yet. But this is the goal of those teachers whom correctional administrations should encourage to stay in the field. There may not be enough dropouts among the poor teachers.

Donald Wilson, President of the Association of Classroom Teachers asks these questions:

> How should teachers respond to the issue of accountability? Do we assume a posture of apologetic defensiveness, or do we talk about accountability from a position of strength? Do we reject completely what the critics say, or do we refine their statements and say clearly where we classroom teachers believe the major responsibility lies for innovations in education and for the task of defining the learning process and how it happens?
>
> We must consider the relationship between authority and accountability. We must determine whether we can delineate a sphere of accountability for the classroom teacher for his own performance and for that of his students (Wilson, 1970).

It is proper and right for effective teachers in prisons, like all effective teachers, to monitor their own teaching; that is, to provide governance for their profession. Part of this governance includes the right of the teachers to help regulate the kind of educational experiences in universities and to help determine the university curriculum for advocating correctional education. Educational associations might want to work with correctional educators in designing appropriate curriculum for teachers of adult basic education.

6. Improve the status of correctional educators. Sufficient funding is imperative. A colleague from Quebec has suggested that funds appropriated for regular day schools be decreased and then these added monies be included in a larger fund which is available to adults at age twenty or later who are ready for school and know what they want to learn from school. Some of these funds could go for proven correctional education projects. The Secretary-Treasurer of the Correctional Education Association surveyed a group of correctional educators. The 767 members of the Correctional Education Association represent perhaps five percent of the potential population of correctional educators. He found, for example, that South Dakota has an accredited school with inmate instructors and that Texas has established a school district within a correctional system (Seidler, 1971).

> Correctional educators are concerned about the work they do. The teacher in the classroom has little or no time to write about what he is doing. He is too busy trying to deal with the failures of public school education. He is bothered by the failures represented by high rates of recidivism. Usually he is the primary socializing force within the institution. If he does his work well, custodial supervision is easier.
>
> The inmate finds a larger sense of worth because he becomes a person within the classroom. When things go wrong within the institution the education and vocational programs are the first ones shut down. He is likely to find his curruculum and his spending determined by administrative order. He is not recognized as a professional in the institution nor is he recognized as one in the community. Whatever we can do together will of necessity have to say something about the professional status of correctional teachers (Seidler, 1971, p. 5).

Should not teachers of ABE in correctional institutions join teacher associations and therefore be included in the bargaining units of teacher associations? The following suggested provisions for contracts, adapted from the National Education Association may be helpful for correctional educators in preparing appropriate provisions.

> Full and part-time teachers of inmates should have, to the extent possible, the same contractual benefits, rights and privileges, including access to the grievance procedures, as any other teacher in the association.
>
> The hourly rate of pay for part-time teachers of inmates should be computed according to some objective and equitable basis, such as an hourly rate based upon the salary of a full-time teacher of children with comparable training and experience.
>
> Full-time and part-time teachers of inmates who work outside "regular school hours" should receive such additional benefits and protections as are necessary.

Provision for at least ten hours of in-service training programs in methods of teaching adults shall be made by the institution at no cost to teachers in which they shall participate at their regular rate of pay.

Provision should be made for teachers to attend, at institution expense, at least one professional education conference during the school year.

7. Employ correctional educators in the public schools. The process should go both ways. Crime prevention as communicated in adult education courses in the public schools is one way of communicating to parents of school age children. Already some adult education departments in the public schools are operating such courses. Correctional educators would be ideal resource specialists or course leaders. Olson (1971) reports a course on "Parents Concerns in Drug and Sex Education" offered by the Prince George's County (Maryland) Public Schools. Public schools also offer courses for inmates. "Crime and Delinquency Prevention Program" is offered in the Flint (Michigan) adult education program. This course includes aptitude testing, public speaking, vocational counseling, job placement assistance, and various follow-through services for inmates. Eighty percent of those taking the program have not been re-arrested in a two-year period. The Fort Wayne (Indiana) Community Schools offer programs leading to the GED. Graduates with the diploma, but not released from jail, become teachers' aides.

Could correctional educators be trained to serve as consultants to, or leaders of adult education programs in the public schools? Could they carry out home visits and help ease the "re-entry" problem of inmates? Crime itself hurts adult education. The headline of the Washington Daily News of January 7, 1971 was "Crime Forces Big Drop in D. C. Night Schools." People were afraid to come out at night to go to night classes for adults.

8. Consider resigning from correctional education. I have not seen your flow charts and have not followed your loops. But I might guess that one direction which some correctional leaders might go--is right off the page. That is, teaching or administering an ABE program in a correctional institution is not for him or for his colleagues. In that case, perhaps he should consider resigning. I have on my desk the announcement of a new job to coordinate a broad range of residential conferences, institutes, seminars, workshops, and short courses for managerial and supervisory personnel. The person holding the position should have a correctional background. Is that for you? Or, is one of, I am sure, many other related jobs? If you leave, however, find someone to take your place and transmit to him or her your conceptual model and management scheme. Let's keep only the best and most dedicated professionals in correctional education and monitor the profession ourselves. After all, correctional work is not for everyone. But, for those who stay, let them really believe it can make a difference.

My position in the futurology of correctional ABE is that if some of the eight suggestions mentioned today are implemented, the future of

correctional education will be bright. Since most of the thousands of adult inmates do return to the larger society from whence they came, then the need for education, and specifically that of adult basic education, is imperative. Without an elementary adult education, let alone a high school education, the economic prospects for an ex-inmate are bleak. Without a job, the chances of recidivism are gross. Recidivism repeats the cycle, and education, and this time correctional education, has failed once again.

We need all of the useful manpower our nation can provide for the exciting decade ahead, that what the United Nations calls the Second Development Decade. Surely we know now that inmates can sometimes be rehabilitated and that effective education is a necessary, if not sufficient cause for the rehabilitation.

Perhaps the tail will wag the dog. In the public schools, teachers are assuming greater leadership responsibilities. Teachers may run schools: Analogously, will that happen in the penal institutions? If education leads to rehabilitation, then perhaps the tail will wag the dog in institutions also.

This futurologist concludes by pleading for a better system of correctional education in our land--to help redeem, in effect, the entire field of corrections.

References

Alhstrom, W. M., & Havighurst, R. J. Four hundred losers (1st ed.). San Francisco: Jossey-Bass, 1971.

Attwood, M. H. Some other institutions. In Handbook of adult education. New York: Macmillan & Co., 1970.

Carpenter, G., Assistant Director of Education, Bureau of Prisons. Conversation of January 27, 1971.

Cortright, R. W. American literacy--a mini-analysis. Convergence, 1968, 1, 36-38.

Cortright, R. W. Inmate illiteracy. Journal of Reading, 1965, 8, 163-167.

Cortright, R. W., & Brice, F. W. Adult basic education. In Handbook of adult education. New York: Macmillan & Co., 1970.

DeCrow, R. Adult education in the United States. Technical education, May 1968.

Division of Adult Education Service. Negotiation for adult educators. Washington, D. C.: National Education Association.

Ford, D., & Nicholson, E. Adult basic reading instruction in the United States. Newark: International Reading Association, 1967.

Luke, R. A. Retrieving the high school dropout. Pennsylvania School Journal, 1970, 11, 128-129.

Mauk, W. S. The effects of short-term tasks and financial incentive on the educational achievement of young prison inmates. Unpublished doctoral dissertation, Florida State University, 1970.

National Commission on Teacher Education and Professional Standards. The meaning of accountability: a working paper. 1970.

Olson, R. Adult education and the urban crisis. Today's Education, 1971, 60, 24-26.

Vitek, J. C. Adult education in prisons. In Perspectives in ABE for administrators: Proceedings of the Adult Basic Education Administrators' Workshop. De Kalb: Northern Illinois University, 1967.

Wilson, D. F. Confronting the issue. Address to the Classroom Teachers National Study Conference on Accountability in Education, Washington, D. C., November 27, 1970.

Suggested Readings

Berman, M. L. Preparing prisoners for college: Using programmed learning and contingency management. Education Tech, 1970, 10, 34-36.

Chatowsky, A. P., & Johnson, R. L. Game theory and short-term group counseling: Transactional analysis. Personnel and Guidance Journal, 1969, 47, 758-761.

Gaynor, S. Business education and crime correction. Business Education World, 1967, 48, 13-14.

Gray, W., Jr. Book bridges. Adult Leadership, 1970, 18, 247-248.

Knippenburg, O. F. Education and crime. Ohio schools, 1967, 45, 15-17.

Massimiana, S. A., & Verdile, B. V. P. New Jersey school conducts program for prison inmates. American Vocational Journal, 1969, 42, 51.

Roth, E. Learning behind bars. Phi Delta Kappan, 1970, 51, 440-443.

Schmuckler, I. Confidence game. Adult Leadership, 1969, 18, 145-146.

DESIGNING AN EFFECTIVE ADULT BASIC EDUCATION PROGRAM FOR CORRECTIONS

Bruce E. Baker
Federal Correctional Institution
Milan, Michigan

Introduction

Adults in certain crucial respects are different from young people as learners, and accordingly a different approach is required to help them learn. The primary and immediate mission of every adult educator is to master this approach to help individuals satisfy their needs and achieve their goals. This is the central theme of Knowles (1970).

Ryan (1970) states,

> Learning systems must be devised which will include experiences designed for modifications of behavior patterns. These systems must employ new media and techniques which will provide new experiences in social structure systems. Adult basic education in corrections is an integral part of correctional treatment programs, which provides a logical approach to positive change in behavior of the offender and such a program, if conducted properly, will prove to be wuperior to any other tried thus far (p. 16).

An adult learning experience should be a process of self-directed inquiry, with the resources of the teacher, fellow students, and materials being available to the learner but not imposed on him. Although the education of adults is as old as civilization, the notion that there is a distinct and different technology for adult learning is in its very beginning stages of development.

> So our climate must be characterized by a willingness to take risk, to experiment, to learn from our mistakes, and to construct theories that we know will have to be modified. People who need pat answers, neat categories, and proved theories will be uncomfortable in the climate required by this book, or indeed, by the field of adult education, especially in corrections as it is now known (Knowles, 1970, p. 16).

Environment

Any relative value listing of importance of pupil, program, or teacher would be arbitrary, however the following example will clarify priorities. The pupil may be compared to a vehicle, the program would

be the engine, and the teacher the fuel. It becomes clear that none can operate independently, thus each is necessary and vital in the educational process and any rating becomes a chicken-egg semantic exercise which does little to give a firm weighted sense of their relative importance. Rather than engage in prolonged discussion, this thesis will treat them as an interrelated unity where the parts exist only to create a productive total product. Indeed, the parts melded successfully can create a strength unit greater than the sum of individual segments. This strength can be the predicator of success. In a broad sense, all phases of the training are educational in teaching the student some things about himself and the world about him and how he may relate to that world.

Educational services must be geared to further the basic objective of adult basic education in corrections which is to modify delinquent modes of behavior. This means that educational services should provide a certain amount of success and satisfaction for all students without regard to achievement, and that they should expect and experience acceptance, warmth, and therapeutic handling in the classrooms.

Teaching, in the most elementary sense, is a communication relationship between individuals who exchange information. What the learner needs or wishes to know is determined and the teacher attempts to meet the particular need (Ryan, 1970, p. 70). "Readiness" involves a desire to learn; developing this desire in students who have found school a frustrating and unrewarding experience requires a skilled teacher and an imaginative and stimulating program. Emphasis should be upon the basic tool subjects, however this is not to suggest that students be denied a broad or rich education.

Teachers questing for modes and methods may search for a ready-made package program which does not exist. This dearth of convenient capsules of teaching techniques is emphasized by Mager and Beach (1967) who state:

> Though schools and instructors have been in existence for centuries, and though educational researchers have been at work for decades, we do not yet have a science-based guide that tells us how to make accurate selection of appropriate instructional strategy (p. 52).

First, it must be realized that curricular materials on the market have moved from a position of scarcity to one of selectivity. Technological advances have made possible facilities of virtually any design required, and it is the problem of administration and staff to seek, experiment, and build for success.

Building the Course

We come to the process that might be called "engineering" which is the transformation of program objectives into a pattern of activities. Perhaps it comes closer to call this the "architectural" phase of program development, since it is in essence a process of building materials

according to the specifications of program objectives. The architectural function in the designing of comprehensive programs of adult education consists of selecting that combination of learning units or formats that will most effectively accomplish the objectives of the program and arranging them into a pattern according to a useful working outline (Knowles, 1970, p. 133).

Dr. Coolie Verner of the University of British Columbia distinguishes three necessary elements in the notion of processes for adult education. The first element is the method, the organization of the prospective participants for purposes of education. The methods of education identify the ways in which people are organized in order to conduct an educational activity. Examples would be individual, group, or community.

The second element involves technique; the variety of ways in which the learning task is managed so as to facilitate learning. The third element involves devices; all those particular things or conditions which are utilized to augment the techniques and make learning more certain (Knowles,1970, p. 133).

A course program must be kept highly flexible if it is to adapt itself continuously to the changing needs of adults. The best course programs seem to operate on an almost perpetual "emergency" basis responding to change. This kind of flexibility is difficult to achieve if the course program is merely an appendage of some older more routine types of programs.

Determing What the Program is to Offer

1. A tentative goal should be set as the total number of courses to be included in the program.

2. Every program should be founded on a solid core of subjects in which there is a known need and interest, but should also include a small number of purely experimental subjects for the purpose of exploring new needs and interests.

3. A general program of courses should seek to present a more or less balanced variety of courses.

4. Subjects should be selected that are in keeping with the objectives of the program.

5. Subjects should be limited to objectives that can be accomplished within the time limits set by the nature of the program.

6. Subjects should be functional and concerned with solving real-life problems of people, not merely abstract knowledge.

Educators often become prematurely attracted to an innovative practice which is featured in another educational program. Extreme care

must be used to assess the innovation to determine whether the adoption is appropriate to the observer's own system (Ryan, 1970, p. 74). The effectiveness of any correctional education program depends primarily upon its quality rather than its quantity.

The Student

A fascinating aspect of the human race is in how humans differ in personalities, interests, motivations, abilities, and education. The most important of these in a potential student is ability, yet it seems to be the one constantly overlooked. The reason for the oversight is involved and varies, but it must be attributed to educators difficulty in measuring and assessing the ability of a student. Every learner should be tested to evaluate aptitude, interests, achievements, and learning problems. For many students several departures from usual standards seem indicated. Some have been so defeated by previous school experiences that they are hardly able to tolerate being in a school classroom.

The learner in a correctional setting is often disadvantaged by a unique combination of characteristics, including low educational achievement and the lack of positive social-psychological development. Studies reveal most offenders are undereducated school dropouts, and innovative techniques must be unlike those which made their school experiences unpleasant. Too often traditional schools have failed to make instruction meaningful and have not related it to everyday experience. Furthermore, if the contention that the students in institutions have short attention spans is valid, then the modification deficiency would require instructional techniques which involve direct continuous learner participation (Ryan, 1970, p. 75).

The objective is to fit the school to the child, not the child to the school. This may at first be a slow and fruitless procedure, but the ultimate objective should not be lost sight of, and professional ingenuity will find means of helping diverse individuals establish patterns for themselves which will be in general keeping with the overall objectives of the program.

The following evaluative criteria were listed by Silvern in Ryan's (1970) Model of Adult Basic Education in Corrections:

1. The student is the most important element in the system.

2. The student shares responsibility for learning with the teacher.

3. Students share responsibility for learning with the group.

4. The teacher will delegate authority and responsibility to the student and the group.

5. Teachers will delegate authority and responsibility to the curriculum materials development persons.

6. Teachers will rely upon materials produced by the curriculum development persons and use them as designed.

7. Teachers will shift emphasis from control of learning to management of learning, wherein diagnostic techniques will be developed (p.73).

The Teacher

Teaching is not merely a cold, calculated delivery of facts to a non-responding pupil. Instead, teaching, to be meaningful must involve the student through motivation and personalized response to need. Teachers have the capacity for shaping society if they study a community and its needs. They then can fashion their educational policies and practices to meet these needs. This requires an experiential sense of timing. The practice of executing certain progressive steps in expanding facilities and services must be geared to the readiness of the student and the community to accept.

Regardless of the media and materials used in any learning setting, success will largely depend upon the teacher's creativity, motivation, and desire. To make any medium work, the teacher must be prepared, must have a thorough knowledge of what the medium can do, and know how it is to be manipulated before it is exposed to the learner who may leave the class never to return if he feels his time is being wasted (Ryan, 1970).

The title, teacher, is used to refer to those members of the staff who are carrying the responsibility for imparting academic knowledge and skills. It should also be pointed out that few teachers come to an institutional setting with truly extensive training in the dynamics of delinquent behavior. This means the school should provide training for its teacher to aid them in carrying out a most challenging and difficult assignment.

"Since I believe that the single most effective teaching device available to a teacher is the example of his own behavior, I shall do my best to make this book a good example of an adult-learning experience (Knowles, 1970, p. 15)." Only the daily meeting and continuous association of pupils and teacher throughout the day will enable the teacher to understand the pupil and his problems. The instructor is the person who will have the closest and most prolonged contact with the student.

It is imperative that the classroom teacher possess certain positive characteristics.

1. He must genuinely like people.

2. He must be competent and highly enthusiastic.

3. He must be optimistic about the success of his students and infuse them with that optimism.

4. He must be flexible.

5. He must be patient, understanding, and creative and well-adjusted.

Also, he must be a well-adjusted individual who can serve as a positive model for the learners to emulate (Ryan, 1970, p. 77).

Creativity and innovation are especially important in contriving techniques and experiences in the adult basic education in corrections program. Concerted effort should be made to relate these to real-life situations. The most effective way to do this is to use the real-life resources of the community by taking learners into the community or bringing outside resources into the institution. It is important to plan these experiences with definite goals and objectives in mind.

Creating Experiences for Learning

One of the first priorities in developing an instructional program should be the utilization of a wide variety of media, materials, and techniques in creating learning experiences. This is especially important in consideration of the nature of the learner and the learning environment in the correctional setting. Variation from the conventional test-book-lecture approach should be applied for motivational as well as efficiency purposes whenever possible (Ryan, 1970, p. 75).

All instruction should point directly toward stated objectives, and success should be recognized. Variety should be injected into the presentation of materials, utilizing short presentation, involving the learner in discussion, and using a variety of media. Frequent, individual contact should be maintained with the learner so that constant evaluation of his progress can be made.

A relationship should be maintained with the learners as a human being rather than as a number. Finally, there should be acceptance of the learner where he is, and willingness to go with him from there..

Media

Media for educational purposes can be defined as any external devices or piece of equipment used to convey concepts of information from one human mind to another. The new media, programmed instruction, soft and hardware, kinescopes and television, all lend themselves to individual personal instruction and, therefore, diminish the student's fear of exposure.

Materials

The criteria of selection include innovation, content, and methodology. The inclusion of these materials does not mean they represent the only acceptable materials, but correctional educators should be aware

of their possibilities.

Counseling

Educational counseling guidance in the selection of educational opportunities are not so much formats for learning as administrative services. But clinical or personal counseling which typically involves a series of "communications" over an extended period of time, and is concerned with helping an individual gain self-insight, can properly be classified as a format for learning, and should be used liberally for reassurance and reinforcement of confidence (Knowles, 1970, p. 134). Counseling is a format through which students can meet certain of their learning needs more effectively than is possible through other formats.

Directed Study or Tutorial

The idea of developing tailor-made reading sequences to help individuals engage in self-directed inquiry, with periodic consultations on their progress and problems has been developed to its highest point by the reader's advisory services in our public libraries. But this is a format that can also be used to good advantage in other institutions to increase their responsiveness to individual differences among their students.

Programmed Instruction

This type of teaching has experienced a rapid growth in popularity in recent years. In PI, the material is presented to the learner in a series of carefully planned sequential steps. At each step the learner must make a response that tests his comprehension. He then receives immediate feedback regarding the correctness of his response. The program is planned to bring the learner to the accomplishments of specific "terminal" behavior objectives which have been set by the programmer and when these terminal behaviors have been mastered, the program is completed.

However the very notion of "terminal" behavioral objectives is discordant with the concept of continuing self-development toward one's full potential. But programmed instruction is still in a primitive stage of development. Perhaps as the technology progresses, it will free itself from the constraints of the behaviorists and will develop ways to facilitate the learner's engaging in a process of self-directed inquiry (Knowles, 1970, p. 136).

Programming techniques, it is hoped, will provide more and more varied types of programs, some effective primaily for helping individuals discover basic facts and principles, and others effective for learning critical discriminations, analytic skills, problem solving abilities, and even creative approaches to problem solving.

Findings of one pilot project, which utilized a reading laboratory in an adult basic education program in the White Plains Public Education Center, 1969, (Ryan, 1970, p. 84) indicates that:

(a) adults preferred individual and self-directed materials with individual machines;

(b) instructional materials and equipment were used most readily by adults when located as close as possible to their working stations;

(c) since most of their work was on an individualized basis, adults liked and enjoyed the freedom of moving in and out of the learning laboratory at their leisure;

(d) very few students wanted the learning laboratory to be more like a regular classroom.

Community development is closely related to the action project as a format for learning, but it is a much broader and richer concept. The adult educator is primarily interested in community development as a means of education of the community and the people who are to live there. These are the factual learnings which community development may stimulate. At the same time, however, it is also possible to learn how the community is put together by which it may achieve its goals (Knowles, 1970). Specific objectives must be designed to fit the individual learner's needs. Programs must be evaluated throughout the learner's stay so that adjustments can be made when indicated.

More on Environment

At the highest policy making level there must be strong support for the adult basic education in corrections program and firm and understanding commitment of the entire institutional staff in creating a positive climate (Ryan, 1970, p. 76). The offender should be very much involved in the selection of an educational plan. The focus should be on the student, not subject matter.

Scheduling is also complicated by the fact that students move in and out of the program at all times of the year, and while in school are often called out of classes to keep appointments and have interviews with the treatment staff. This nessitates complete understanding between the school authorities and the other staff members concerning the common goal of the student. It requires careful planning to know where each student is at all times (Scarborough, 1962, p. 99). Thus scheduling should be very flexible which again emphasizes the need for individual analysis of the personality, abilities, and educational aptitudes of each student.

Conclusion

This paper is not to be considered as the final word on course building, but rather as an introduction with the idea of stimulation, exploration, research, and continued study to aid in the creation of an educational milieu.

Gibran, in his book The Prophet summed up teaching nicely as follows:

> No man can reveal to you aught but that which already lies asleep in the dawning of your knowledge.
>
> The teacher who walks in the shadow of the temple, among his followers, gives not of his wisdom, but rather of his faith and his lovingness.
>
> If he is indeed wise, he does not bid you enter the house of his wisdom, but rather he leads you to the threshold of you own mind (p. 62).

The Challenge

Teachers are constantly exhorted to "sell" programs, however it would be well to follow the example of the successful salesman, who, when asked what his "sales formula" was, replied, "I don't sell, I just get my customers to buy. I use the musical method." In this approach, he explained, "I use the opera Aida as the basic development of my working philosophy.

First, get their ATTENTION, then stimulate INTEREST, arouse DESIRE, and finally compel them to ACTION."

It is exciting to envision the results that educators can accomplish by the development and delivery of a system that will motivate students to want to buy a practical education rather than being sold a package of irrelevant learning.

To create a system that will effectively achieve this objective all educators should be concerned with adult basic education in corrections!

References

Knowles, M. The modern practice of adult education. New York: Associated Press, 1970.

McKee, J. The draper project. Washington: Department of Labor, Manpower Administration, 1971.

Ryan, T. A. (Ed.). Model of adult basic education in corrections (Experimental ed.). Honolulu: Education Research and Development Center, University of Hawaii, 1970.

Scarborough, D. Institutional rehabilitation of delinquent youth. Albany: Delmar Publishing Company, 1962.

DESIGNING AN EFFECTIVE ADULT BASIC EDUCATION PROGRAM FOR CORRECTIONS

Ted Cleavinger
U. S. Penitentiary
Terre Haute, Indiana

Introduction

An educational system should be designed to motivate students to become involved in a total educational experience which will assist them in regaining self-confidence, recognize individual worth, and achieve self-respect and dignity to return to society. The program must be based on the needs of the individual, taking into account the different strengths and weaknesses of each offender, and be offered in an atmosphere in which the learning environment is conducive to creating positive behavior change.

Analysis of the Organizational Climate and Structure

Knowles (1970) points out that

> one of the misconceptions in our cultural heritage is the notion that organizations exist purely to get things done. This is only one of their purposes; it is the work purpose. But every organization is also a social system that serves as an instrument for helping people meet human needs and achieve their goals.

He also says "This is the primary purpose for which people take part in organizations--to meet their needs and achieve their goals--when an organization does not serve this purpose for them they tend to withdraw from it." So organizations also have a human purpose.

In designing an adult basic education program you must know the purpose of the organization or institution for whom you are designing the program. Aspects that should be considered include:

1. Type of institution; is it a youth institution, Federal Correctional Institution, Penitentiary?

2. Age of the offender.

3. Type of offender, cultural background, lack of skills.

4. Philosophy of the institution.

5. Type of outside community.

6. Philosophy of outside community.

7. Philosophy of administration, size of staff, staff abilities, experience and background.

8. Educational facilities.

9. Institutional budget.

We are sure that many more criteria could exist that should be considered depending on the particular place or institution, however, the preceding have been found to be most important in our experiences.

Selecting the Formats for Learning

The design of a comprehensive program for adult basic education in corrections should consist of selecting the learning units format that will effectively accomplish the objectives of the program. These units should be arranged in a pattern that creates an atmosphere conducive to learning. A wide variety of formats should be made available to program designers so that the widest possible range of individual needs, styles, and conditions for learning can be met.

Several formats are available for helping individuals to learn. Some are listed below.

1. Apprenticeship

2. Correspondence Study

3. Counseling

4. Directed or tutorial study

5. Program instruction

General formats for group learning

1. Action groups - These are Jaycee groups or groups to help juveniles.

2. Clubs (Gavel, Alcoholics Anonymous, Narcotics Anonymous).

3. Discussion groups (Great Books, Writer's Guide, Philosophy).

4. Special interest groups (culture groups).

Organizing a Course Program

Several principles of curriculum building are suggested for your use:

1. A tentative goal should be set as to the total number of

courses to be included in the program.

2. Every program should be founded on a solid core of subjects in which there is a known need and interest, but should also include a smaller number of purely experimental subjects for the purpose of exploring new needs and interests.

3. A general program of courses should seek to present a more or less balanced variety of subjects.

4. Subjects should be selected that are in keeping with the policies of the institution and the objectives of the program.

5. Subjects should be limited to objectives that can be accomplished within the time limits set by the amount of time the offenders have to do.

Scheduling courses

1. When should course meetings be held?

2. How long should the meetings last?

3. What days of the week should classes meet?

4. How frequently should classes meet?

5. How should offenders be grouped?

6. How long should the courses last?

Several course programs are available for helping individuals to learn. As already mentioned, you must examine the offenders needs and set your program around these. In designing an adult basic education program the following should be included.

High School or GED. Since most of the offenders coming to an institution are lacking a high school education, this or the GED program should be a large and indispensable part of the program to be designed.

Basic communications. Approximately 15 to 20 percent of an institutions population fall into a grade level of 6.0 or below in reading ability. Every offender should leave the institution with at least a 6.0 reading level.

Evening school activities. These are very vital, particularly if most of your academic program is during the day. These activities should include high interest groups such as a Black Culture course or any course

or discussion group that the offenders would want; these would be completely voluntary.

Vocational Training, on Job Training or Apprenticeship Program. Most of our offenders come to us unskilled and unable to hold employment because of this deficiency. The vocational, on-the-job training and apprenticeship programs should be a very vital part of the program. These would include your vocational laboratories where the related subjects to many trades are taught; examples are the DuPont courses which are available in practically all trades. These should be offered in a study release program also.

Social Education. This is a program where your objectives are to observe behavioral changes in the offenders. Without certain changes in the individual's behavior, all the education in the world will not keep him from returning to prison.

College correspondence and college courses. These should be made available to any offender that has the ability to handle these courses. This is probably the smaller of the groups you will have to meet the needs for. These can be offered by closed circuit TV, or by courses being offered inside the institution, or by study release.

Recreation. This part of the program is probably one of the most vital and least planned in correctional institutions. In most institutions the recreational facilities are very inadequate.

References

Knowles, M. Modern practice of adult education. New York: Association Press, 1970.

Ryan, T. A. (Ed.). Collection of papers prepared for 1970 national seminars. Honolulu: Education Research and Development Center, University of Hawaii, 1970.

Ryan, T. A. A model of adult basic education in corrections. A paper presented to the American Psychological Association, Miami, Florida, September 4, 1970.

DESIGNING AN EFFECTIVE ADULT BASIC EDUCATION PROGRAM FOR CORRECTIONS

Richard E. Cassell
U. S. Bureau of Prisons
Washington D. C.

Introduction

It is a pleasure to present a topic of such vital importance to a group of individuals who are actively involved in designing an effective adult basic education program for their respective institutions. The challenge to make changes in an environment that has traditionally been non-productive is exciting.

These changes will require that you, the designers, develop and use skills and techniques that span a multitude of human perceptions. You must adopt a role which includes your own special training and the perceptions of other specialists if you are to adequately "read" the environment where change must take place. This role would include the perceptions of a philosopher, sociologist, management specialist, and evaluator, historian, administrator, and humanitarian. The role of the adult education program architect is to coordinate these perceptions which provide the guidelines for changing human behavior.

I will present to you an area outline for designing and developing a productive adult basic education program that has lasting qualities. These guidelines include: A Philosophy of Education, A Learning Environment Staff Utilization, Student Performances, Structure of Internal Systems, Curriculum Guides, Communications, Administrative Support, and Evaluative Techniques.

The Learning Environment

Often we have heard teachers and administrators make statements concerning the lack of motivation on the part of the student. This observation emphasizes the student's failure to participate in an activity initiated by the teacher. The activity is often one-dimensional; that is, material is offered in a single approach: lecture, film, writing, discussion, programmed materials. Little attention is given to the particular learning style of the student. Thus, since the teacher knows how to teach, the failure is often attributed to the student. What teachers forget is that the student is the principal in education, and the teacher exists to aid the student, not to satisfy his own needs. So, if a student does not participate, and this word has several implications which I will not discuss at this point, the fault most frequently lies with the teacher or the program, or both, not with the student.

One of the significant means of improving student participation is to give consideration to the many ways learning takes place. A variety

of avenues for learning have to be opened for the individual. Modern technology makes it possible to appeal to the student's intellect by multi-sensory presentations: teaching machines, video-tape equipment, reading machines, and others. This technology also provides time for the teacher to direct other responsibilities essential to coordinate learning activities.

The Classroom Manager

The role of the teacher must change to direct and manage the many activities that should be in progress simultaneously. The classroom manager role eliminates the authoritarian image and creates a partnership in learning activities with the student. The responsibilities of the classroom manager are:

(a) to identify the elements of a particular program that corresponds with the student's particular method of learning.

(b) to assess the student's potential through testing and observation to determine the most efficient method in matching the student with the program.

(c) to set individual goals with each student and provide a maintenance system to help the student to achieve these goals.

(d) to develop skill deficiency prescriptions with performance objectives for each student. These prescriptions must include sequential program elements that involve sensory perceptions.

(e) to develop evaluative techniques at different stages to measure progress in relation to the goals established by the student.

(f) to build success into the program to reinforce the student and to validate the program.

Basically the ingredients for a successful program design are: selection of a variety of programs, identification of its useful elements, diagnosis of procedures for student prescriptions that correspond with the elements, effective goal setting, multi-sensory presentations, methods of evaluating individuals and programs, and reasonable re-assessments to improve the existing program.

The manager-teacher who is making the transition from standard to open environment must comprehend that the new responsibilities are not reducing him to clerical staff, but rather they are elevating him to a much more important and demanding role in redirecting learning activities. This new role for the classroom manager is an image that must be carefully groomed by supportive services of those in supervisory

capacities. The training of classroom managers is best done in an environment where management is progressively demonstrated. Supervisors should encourage visitations, both from community and institution locations, to these environments and provide literature of progressive programs utilizing innovative concepts.

Program Structure Leads to Experimentation

The development of logical internal structures in each of the program areas--curriculum, methods and techniques, evaluations, goal setting--are necessary to the process involved in learning. These developmental activities have a natural tendency to expel many myths about the causes of student failure. They encourage experimentation of special projects that can provide documentary evidence revealing what is effective in changing or redirecting learning behaviors. This experimentation provides a basis for refining program elements and learning efficiency for the students. Also, it serves to maintain a balance in making continuous changes in a more effective learning environment.

The special quality which generates productivity is a positive approach to all problems. The need for change is sometimes evidence of failure. But failure should not prevent us from learning from our mistakes. It should be regarded as a learning experience that can assist in finding success. Success orientation brings maximum performances, enabling a broader spectrum of learning functions by the student.

Informal Educational Learning Center Design

The learning environment in corrections should be the most attractive place in the institution. The traditional classroom setting with the traditional teacher has often created a negative image of education. The student who has been programmed to fail in his previous education experience must be directed to a completely new environment where informality prevails. Any positive associations that can be made with learning can make the learning experience a much more positive one. Attractive colors on walls, drapes, classroom furniture, bookracks, cabinets, and other learning accessories are helpful in creating this new attitude. The arrangement of the furniture should reflect informality and at the same time serve the functions of a learning atmosphere. Murals, poster, and paintings should be located in appropriate areas. Every area should reflect what is being taught by the nature of teaching arrangement and the assessibility to materials being utilized.

Diagnostic areas should be located near the area where all records are kept. The learning area design should allow student movement that doesn't disrupt other activities. Small group discussion centers with portable blackboards for demonstrations serve to focus attention on problem-solving activities. Within this environment a comfortable student lounging area should be provided for students who are waiting for an activity to begin; it should be an area where students can browse

through magazines or other materials.

Evaluation of Program Effectiveness

To measure the effectiveness of a program in relation to the goals and objectives of the student, evaluative techniques that have validity need to be developed. Within the internal structure of a program, frequent element evaluations through behavioral objective measurements are essential. A battery of diagnostic tests administered as a pre-test before the program is initiated is one basis to compare with the post-test at the termination of the program. Quantified data from these tests can be used to determine gain or loss factors of the total program.

Between these evaluations, data from tests devised by a classroom manager can be used to predict the outcome of learning. These data can be derived from check-lists, observed behavioral tests, attitudinal tests, lesson completion tests and other less formal tests that identify progress or the lack of progress.

Summary

The basis for an effective and lasting adult basic education program in corrections is the utilization of the perceptions gleaned from that particular environment. It is necessary to accurately "read" this environment, take from it these elements that are useful to change learning behaviors, adapt these elements to the program, continually evaluate the student performances within the program, provide supportive reinforcement ot the student and allow flexibility for change to take place. The effective adult basic education program is one that does not fail the student but, provides the avenues for growth better academically and in the building of a better self-image of the individual.

TAKE THE NEXT STEP

Amos E. Reed
Oregon State Corrections Division
Salem, Oregon

It is abundantly clear that the present-day corrections manager is no longer involved in a simple corrections system that calls for holding men in confinement for a period to time, programs and dollars. The old "hard-line" approach is rapidly becoming a thing of the past (Advisory Committee on Intergovernmental Relations, 1971). In its place is the rapidly develing interlocking system of programs and accountability that staggers the mind to comprehend.

No longer can the administrator serve as a god-like person of total power and wisdom, whose word is law and whose actions are unquestioned. Today, he must be an educated, experienced, well-trained generalist, capable of utilizing appropriate strategies and synchronizing the efforts of a host of line and staff assistants as they, in turn, work in concert with all other interested persons, including the clients (Nelson, 1969).

The work of corrections is truly complex: crime reduction is one of the ultimate goals. As the President's Commission on Law Enforcement and the Administration of Justice (1967) stated, "Crime is a kind of human behavior and controlling it means changing the minds of men (p. 49)." The Commission went on to emphasize that controlling crime is the business of every American.

We who work daily in corrections share extra responsibilities for taking the lead in developing, introducing and implementing change. Change is really what education is all about, and especially adult basic education. We are interested in the development of individuals through new and modified knowledge, skills, attitudes, and behavior.

The success or failure of any corrections program is influenced to a large degree by the staff--the people who work with offenders day in and day out. The most modern facilities cannot make an institution successful. The staff is the heart of the program, and there is little disagreement that what is needed are persons of integrity, maturity, experience, flexibility, and "heart" (American Correctional Association, 1967). Efforts are to be aimed at opening real opportunities for reformation and self-expression, not attempting to be vindictive, punitive, and repressive (Constitution of Oregon, 1859). It should be recognized, too, that the syrupy permissiveness of the immature, false professionals can do irreparable harm to individuals and to groups. Likewise, the overly rigid, unyielding, coldly punitive person can be just as damaging. These comments may seem somewhat abrupt and maybe harsh, but they are intended to help each of us to continue to be somewhat introspective, to examine one's self--to look before we leap--but to Take The Next Step.

No matter how much the system is discussed, we need persons of determination and courage to move to implement innovations in the face of frustrations, shortages of funds and staff. It is indeed remarkable what a good educator can do with limited resources. It seems that like the good cook, there is an ability to "make do" with what we have. There will be discouragements, surely, but don't give up. The real steel test is to stay with it, persevere. Over time, there will be changes! A real down-to-earth challenge for us is to communicate to our supervisors, administrators and significant others so that they can assist us in obtaining the resources required.

It is imperative that residents' needs be carefully assessed. We must recognize also that there are group and individual needs, and short-range and long-range objectives that must be met. It is essential that program managers see each person--client, staff, general citizen--as one who is unique, who has dignity as a human being, and is worthy of our best efforts to sustain, assist, encourage, and where necessary, direct. To achieve this awareness it is necessary to study the person against the backdrop of his life, experiences and culture. In so doing, it soon becomes apparent that "treatment" must be individualized and selective.

Case management efforts in Oregon, whether in the institutions or field services, are becoming increasingly decisive and better defined. When we spoke to the issue of education in the past it was a very generalized topic. The expectations are changing. Education, as such, is of very high priority but specifics are needed. The approach now developing requires more attention to <u>why</u> a person should receive an education. This program specific must make sense with other programs to follow.

Management by objectives is becoming a reality in most spheres of concern to an administrator. Interested persons inside and outside our system are repeatedly asking the question <u>why</u>. This is not to imply we are not our own worst critics. I think corrections people can be proud of their self-examination and the many efforts to "put our house in order." Now, however, there is a new urgency and almost crisis phenomenon to the character of multiple requests that come to a corrections administrator. Each person has the potential to contribute immensely to his own organization by becoming goal-oriented, by thinking in terms of results, and by aggressively pursuing whatever resource there is available to meet existing and future needs of the education process in your own agency.

Provision should be made for developing a client information system that can give timely feedback of information necessary to relate results to efforts (Oregon Law Enforcement Council, 1970, p. A-30). Most excessive prices can be paid for foolish extremes, of innovation unsupported by evaluation and assessment of inmate needs. Overclaims of knowledge and/or success may fool others for a time, but the day of reckoning always follows (American Correctional Association, 1966, p. 264). There is no substitute for good stewardship, particularly as related to the assessment of the needs of clients.

The effective manager will consider his multiple assignments, assess

expectations against resources, and then proceed to draw upon all interested sources for assistance in developing dynamic management and treatment design for realistically achieving an array of services (Joint Commission on Correctional Manpower and Training, 1969, p. 76). He must think in wholistic, eclectic terms involving peer agencies, supportive volunteer and general citizen action groups, clients and their significant supporters, labor, industry, business, news media, all branches of government--everyone and everything that may be challenged and involved as resources.

Factors to be considered in reviewing resources include those strengths the clients bring, staff involvement, peer managers, legislators, news media, relationships with community colleges, credit transferability, special vocational training certification, apprenticeship councils, National Business Alliance, group living arrangements, supportive services, supervision, surveillance, vocational rehabilitation, welfare, mental health, speciality programs, and so on. A comprehensive listing would be exhaustive. It is significant though to understand that systems must be adaptable to identify and manage such diverse kinds of interests which are present in any community for the benefit of the group, and of individual clients.

It is not enough to design innovative programs, assess needs, and review resources. Effective strategies must be employed for the effective implementation of a plan. This is an extremely important subject. Dr. E. K. (Kim) Nelson, has devoted a major portion of his research work and book, Developing Correctional Administrators (1969), to a discussion of different strategies employed in correctional settings by correctional administrators. This book, published by the Joint Commission on Correctional Manpower and Training, is recommended to you. Copies are available from the American Correctional Association, College Park, Maryland.

Dr. Nelson, Dean of the School of Public Administration, University of Southern California, and former penitentiary warden, interviewed 48 administrators to determine their management strategies. The managers were defined as action-oriented participants in a dynamic force field. Nine management strategies were identified:

1. Compromise: Adjustment and concession among the parties involved.
2. Involvement-Commitment: Gaining the participation and cooperation of the parties involved and thus securing their commitment to the solution.
3. Direct authority: Using the rewards and penalties attached to a formal position and rank in the organization.
4. Dilemma Management: Using the increased attention generated by a problem or crisis as a means of bringing about a desirable solution.
5. Expertise: Introducing new information or calling upon persons with specialized knowledge or skills.
6. Integration: Using a new approach which recognizes the competing interests involved and seeks to avoid diminishing any legitimate ones.

7. Manipulation: Not fully revealing all the purposes sought while skillfully influencing others to achieve the desired goal.
8. Invoking Standards and Norms: Calling upon widely accepted standards and beliefs to bring about the desired result.
9. Delay: Delaying action until a more opportune time or until a natural solution emerges (Nelson, 1969).

It is important to recognize that none of these strategies is offered as the ideal, most or least desired. Many persons have used most of these strategies. It is helpful, however, in planning to implement a system that may bring about change to examine very carefully the alternative ways that may be employed, and chart the most effective course of action.

It has been my own experience that sustained support will tend to flow to the courageous manager who shares information (good or bad), spreads the issues, speaks honestly, leads aggressively and dynamically, and challenges the involvement of all in the serious tasks assigned. It is not necessary to invent the wheel all over again. Let's (1) assess where we are, (2) review the known needs of others, (3) consider the resources available, (4) plan strategies, and (5) act on what we know. Move--Take The Next Step!

References

Advisory Committee on Intergovernmental Relations. State-local relations in the criminal justice system. Washington: Advisory Committee on Intergovernmental Relations, 1971.

American Correctional Association. Correctional administrator's source book (Vol. II). Washington: American Correctional Association, 1966.

American Correctional Association. Manual of correctional standards. Washington: American Correctional Association, 1966.

Constitution of Oregon, Article 1, Section 15, adopted February 14, 1859.

Joint Commission on Correctional Manpower and Training. A time to act. Washington: Joint Commission on Correctional Manpower and Training, 1969.

Nelson, E. K. Developing correctional administrators: Report of the joint commission on correctional manpower and training. Washington: Joint Commission on Correctional Manpower and Training, 1969.

Oregon Law Enforcement Council. Priorities for law enforcement: 1970 comprehensive plan. Salem: Oregon Law Enforcement Council, 1970.

President's Commission on Law Enforcement and Administration of Justive. The challenge of crime in a free society. Washington: Government Printing Office, 1967.

LIST OF CONTRIBUTORS TO VOLUME I*

BAKER, BRUCE E., Assistant Supervisor of Education, Federal Correctional Institution, Milan, Michigan.

BRINKMAN, GERVASE, Chairman, Chaplaincy Committee, State Penitentiary, Joliet, Illinois.

CASSELL, RICHARD E., Regional Administrator of Education, Federal Bureau of Prisons, Washington, D. C.

CHANDLER, BARBARA A., Education Program Specialist, Division of Adult Education, U. S. Office of Education, Washington, D. C.

CLARK, DALE W., Supervisor of Education, Federal Youth Center, Englewood, Colorado.

CLEAVINGER, THEODORE, Supervisor of Education, Federal Penitentiary, Terre Haute, Indiana.

COOPER, CHARLES L., Psychological Consultant, Southeastern Community College, Whiteville, North Carolina.

CORTRIGHT, RICHARD W., Division of Adult Education Service, National Education Association, Washington, D. C.

DAVIS, DON A., Correctional Superintendent, Palmer Correctional Center, Palmer, Alaska.

EISCHEN, CLAUS J., Senior Computer Programmer, Fidelity Union Trust Company, Kearney, New Jersey.

ELERBE, JOHN E., Director, Residential Treatment Center, Newark, New Jersey.

GRENIER, WALTER J., Director of Staff Development and Training, Illinois Department of Corrections, Lockport, Illinois.

HAYBALL, KEITH W., Assistant Chief of Education, State Department of Corrections, Sacramento, California.

HIGMAN, HOWARD, Professor, Department of Sociology, University of Colorado, Boulder, Colorado.

HINDERS, DEAN, Programs Administrator, State Penitentiary, Sioux Falls, South Dakota.

JAKSHA, JOHN W., Director of Education and Training, State Prison, Deer Lodge, Montana.

JOHNSON, RUSSELL E., Seattle, Washington.

JONES, BOBBIE G., Student, Loyola University, Chicago, Illinois.

LAFOREST, JAMES R., Associate Professor and Coordinator, West Georgia College, Carrollton, Georgia.

LOTHRIDGE, ZORINA, Detroit, Michigan.

MARESH, ALFONS F., Educational Coordinator, State Department of Corrections, St. Paul, Minnesota.

MARSING, BOYD, Supervisor of Education, State Prison, Carson City, Nevada.

MCCOLLUM, SYLVIA G., Education Research Specialist, Federal Bureau of Prisons, Washington, D. C.

MCFERREN, TOM, Assistant Supervisor of Education, Federal Penitentiary, Atlanta, Georgia.

NICHOLS, ROY C., Resident Bishop, The United Methodist Church, Pittsburgh, Pennsylvania.

---

*Positions listed for contributors were those held at the time the papers were written.

NIELSEN, JERRY O., State Supervisor, Adult Basic Education, State Department of Education, Carson City, Nevada.

PANCRAZIO, JAMES J., Associate Professor, Psychology and Counseling, Sangmon State University, Sprinfield, Illinois.

REED, AMOS E., Administrator, State Corrections Division, Salem, Oregon.

RYAN, T. A., Program Director, Adult Basic Education in Corrections Program, Education Research and Development Center, University of Hawaii, Honolulu, Hawaii.

SESSIONS, ARNOLD R., Instructor, Division of Community Service, Seattle Central Community College, Seattle, Washington.

SMITH, JACQUELEN L., Supervisor of Education, Federal Reformatory for Women, Alderson, West Virginia.

SNIDER, JOHN C., Assistant Professor of Continuing Education, Department of Education, Colorado State University, Fort Collins, Colorado.

WARREN, MORRISON F., Director, I. D. Payne Laboratory, Arizona State University, Tempe, Arizona.

WOODWARD, HARRY H., JR., Director of Correctional Programs, W. Clement and Jessie V. Stone Foundation, Chicago, Illinois.

ABEC

EDUCATION FOR ADULTS IN CORRECTIONAL INSTITUTIONS: A BOOK OF READINGS

VOLUME II

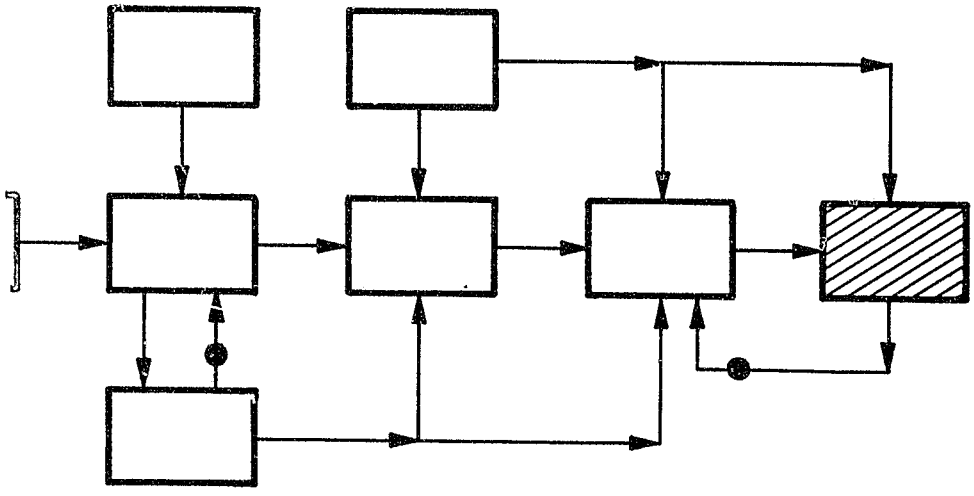

EDUCATION RESEARCH AND DEVELOPMENT CENTER
UNIVERSITY OF HAWAII

EDUCATION FOR ADULTS IN CORRECTIONAL INSTITUTIONS

T. A. Ryan, Editor

In Two Volumes
Volume II

University of Hawaii
Honolulu, Hawaii
1975

This publication was supported in part by a grant from the Division of Adult Education, U.S. Office of Education. Points of view or opinions stated do not necessarily represent official Office of Education position or policy.

INTRODUCTION

This is Volume II of a two volume publication concerned with planning, implementing, and evaluating a delivery system of adult basic education in a corrections setting. These two volumes are designed to elaborate on and demonstrate concepts and principles in the Model of Adult Basic Education in Corrections (Ryan, et al., 1975). Accordingly, the material presented in these two volumes is divided into seven major sections which correspond to the major divisions of the Model:

ANALYZING THE REAL LIFE ENVIRONMENT (1.0)

ESTABLISHING A PHILOSOPHY (2.0)

ASSESSING NEEDS (3.0)

DEFINING GOALS, SUBGOALS, AND OBJECTIVES (4.0)

FORMULATING A PLAN (5.0)

DEVELOPING, IMPLEMENTING, AND EVALUATING THE PROGRAM (6.0)

EVALUATING THE TOTAL SYSTEM (7.0)

Chapters 1 through 5, consisting of 34 articles concerned with planning a delivery system of adult basic education, are included in Volume I. Chapters 6 and 7 are included in Volume II. The 35 articles in Volume II deal with the implementation and evaluation of a delivery system of adult basic education in corrections. These two will be of most value if used in conjunction with the Model.

Honolulu, Hawaii, March 1975 T. A. Ryan

Reference

Ryan, T. A., Clark, D. W., Hatrak, R. A., Hinders, D., Keeney, J. C. V., Oresic, J., Orrell, J. B., Sessions, A. R., Streed, J. L., & Wells, H. G. Model of adult basic education in corrections. Honolulu: University of Hawaii, 1975.

CONTENTS

Volume II

EVALUATING THE TOTAL SYSTEM (7.0)

DEVELOPING,

IMPLEMENTING, AND EVALUATING

THE PROGRAM

(6.0)

Introduction

Step 6 in the Model of Adult Basic Education in Corrections involves developing, implementing, and evaluating the program. Once the previous five steps--analyzing the real life environment, establishing a philosophy, assessing needs, defining goals, subgoals, and objectives, and formulating a plan--have been successfully completed, an adult basic education program for a specific institution can be developed, implemented, and evaluated. This step consists of four parts: (a) providing management support, (b) developing curriculum, (c) implementing the program, and (d) evaluating the program.

Papers by Lyon and Hilfiker provide an overall introduction to this section. Both papers deal with many of the activities necessary to successfully develop, implement, and evaluate an adult basic education program in a corrections setting.

The remaining papers are sub-divided into sections which correspond to the various parts of this step of the Model of Adult Basic Education in Corrections as listed above. Part one, providing management support, is discussed in the papers of Hall, Bennett, Houchin, Brent, Boeringa, Williams, Cannon, Nelson, Erickson, Boone, and Parkinson. Part two, developing curriculum, consists of the papers by Snyder, Barrett, Trujillo, Sherk, Sybouts, DeBow, Hill, Johnston, Rossman, Keve, Sherron, Easley, Frank, Udvari, Antell, McKee, and Weinberg. Although no papers are specifically assigned to part three, implementing the program, the reader will note that many of the papers in parts one and two also deal with this topic. Of special interest are the Williams and Sherk papers. Evaluating the program, step four, is discussed by Zimmerman and Pahrman. Paula Tennant's paper concludes this section. Tennant discusses how "selling your product," i.e., the adult basic education program for a particular institution, should be an overall objective and should be kept in mind while involved in all steps of developing, implementing and evaluating a program.

As stated above, Hilfiker and Lyon introduce this section which deals with developing, implementing and evaluating the adult basic education program. The remaining papers are sub-divided to correspond with the divisions of this step of the Model. The first function in providing management support is surveying and disseminating relevant research. Hall and Bennett both deal with this need. They elaborate on the kinds of research being done which are applicable to an adult basic education program. They also discuss research currently being conducted about which all persons involved in adult basic education in corrections need be aware. For example, Hall describes the applicability of research being conducted by Glaser, Hall, Carkhuff, and Pownall.

Two other functions necessary in providing management support are (a) recruiting, selecting and training staff, and (b) coordinating institutional and community resources. The former is discussed by Houchin, Brent, Boeringa, Williams, Cannon, and Nelson; while the latter is treated in the papers of Erickson, Boone, and Parkinson.

The second sub-section consists of 17 papers dealing with curriculum development. The papers by Snyder and Barrett provide an introduction to this function. Snyder discusses assumptions, questions, and goals to consider when developing an adult basic education curriculum; Barrett presents a conceptual orientation to curriculum development. Following these two papers are those by Trujillo, Sherk, Sybouts, DeBow, Hill, Johnston, Rossman, and Keve; all deal with various philosophical and practical needs to consider when developing a curriculum.

One of the most important components of curriculum development is the selection and use of hardware and software. Sherron discusses why hardware and software is needed; Easley discusses how to determine which hardware and software to use; Frank includes a listing of hardware/software sources in his paper; Udvari discusses various types of hardware and software, their advantages and disadvantages; Antell elaborates on uses of hardware and software; McKee includes a discussion on the individually prescribed instruction (IPI) system; and Weinberg elaborates on linear, branched, IPI, CMI, and CAI systems.

The last function involved in Step 6 is evaluating the program which has been developed and implemented. Pahrman discusses techniques for and timing of measurement, as well as several categories of tests. Zimmerman continues with a discussion of such tests as the Kahn Test of Symbol Arrangement, the Science Research Associates tests, and the Wide Range Achievement Tests.

IMPLEMENTING AN ADULT BASIC EDUCATION PROGRAM IN CORRECTIONAL SETTINGS

James W. Lyon
Frenchburg Correctional Facility
Frenchburg, Kentucky

Introduction

The central figure in any learning situation must be the learner. It is for him that we, the teachers, search for ways and means to impart to him the knowledge and skills which will make him better able to survive, or maybe even succeed, in today's competitive world.

In the distant past, the classroom may have been a cave, a spot on a forest floor, or on the sea shore, where men learned to survive in the hostile world in which they lived. Today's world is no less hostile than the world of the cave man, in fact, it is more complex. The cave man, if he did not learn how to survive, died. The modern man does not die, but is forced to endure a living death of poverty, ignorance, and discrimination. This is especially true for the ex-offender.

It is the purpose of this paper to show how the teachers of adult basic education in corrections may better expose the learner to the knowledge and skills which will make him more capable of surviving in today's world.

Apply Research

The equipment the cave man used in learning might have consisted of a pile of stones or a pointed stick to trace symbols in the sand. As time passed, research has shown that certain techniques, facilities, and materials could improve the quality of the learning process. Research in the correctional settings is relatively rare. However, there is no reason that research from other areas of adult basic education could not be adapted for use in the correctional setting. Technological advances have made possible facilities of nearly any design required. Many varieties of materials are available to the teacher for use in the classroom. The future now holds promise of even more sophisticated hardware and software. Research, when mentioned to the teachers of adult basic education in corrections, should not be viewed as such an enormous pool of information that they cannot find their way and thus give up, but as a source of information to improve techniques and make them better teachers.

A great amount of research material is available in the areas of learning, social interaction, and personal growth and development. A

recent study (Ryan, 1970b) has shown that:

> Learning research which is of importance includes the following topics: motivation, repetition, transfer of learning, reinforcement, goal setting, individual vs. group, teacher characteristics, research, techniques, materials, classroom climate, and facilities. Social interaction includes the following topics: group dynamics, leadership, morale and productivity, communication sensitivity, and social class (p. 64).

Human growth and development research has already been done on the underprivileged cultures and sub-cultures.

According to the studies cited in the Model of Adult Basic Education in Corrections (Ryan, 1970b), some sources of research information relating to adult basic education in corrections are the clearinghouse and regional laboratories supported by the U. S. Office of Education and the U. S. Bureau of Prisons. After research information has been acquired and evaluated, one is ready to (a) acquire the proper staff, (b) develop the curriculum which will meet the needs of the learner, and (c) implement the training program.

Perform Management Functions

Before any management functions can be performed, adequate and valid information must be supplied to the decision-makers. Some of the information needed by the decision-makers includes: number of learners, their grade levels, their characteristics, type and pattern of staffing, type of facility, supplies and materials required for the program, when and how the program was implemented, source of funding, and adequate provisions for evaluation of the program. Funding, in the most part, is done at least a year in advance so the scheduling of new programs cannot be just a spur-of-the-moment decision. If it is, it must certainly fall through. Acquiring the proper staffing pattern is of utmost importance and is second only to the amount and types of funding that is available. The staff personnel must first of all be willing to work and give all they have to the program. Secondly, they must have the knowledge required to carry out this program.

Some desirable traits which are of the utmost importance for the teacher who will operate the program are: (1) willingness and ability to work with others, (2) ability to accept change and modifications in the program, (3) the ability to make and suggest such changes as are called for, (4) have a deep and undying interest in the individual as a person, (5) ability to work with his co-workers in obtaining goals and objectives of the program, (6) thorough knowledge and understanding of the goals and objectives of the program, (7) knowledge of adult basic education and teaching tools and techniques which will enable him to succeed.

After the proper staff has been selected and trained as to what

the goals and objectives of the program are, they must then set out to adopt or produce the proper curriculum to meet these goals.

After the staff has been selected and trained and the curriculum has been produced, the program scheduling should be done. Information concerning the times that men are available to participate in the program should be considered in view of institutional demands such as industry, maintenance and their related activities. The purpose for scheduling the program at this time is to obtain the maximum efficiency from the staff and facilities to meet the goals and objective of the program.

According to Ryan (1970b): "Some of the methods of scheduling are flexible scheduling, time block, floating period, double periods, revolving schedule, rotating scheduling, modular scheduling, combination scheduling, and mosaic scheduling (p. 70)."

In order to help insure that the program will succeed, the proper climate for learning must be established and maintained. The effect that the learner's environment has on him must be a positive one. The educator can make this possible by soliciting the aid of staff which are not directly involved in education. The learner should never be humiliated whether in front of the group or in private. This is true whether it comes from the teacher or someone outside of the school.

Develop Instructional Program

The material presented to the learner must meet the needs of the learner. It should be organized to follow a developmental learning sequence; that is, proceed from the previous concept or skill to the next level concept or skill. The material should be interesting and stimulating to the learner and boredom should never be evident.

According to Ryan (1970b): "A curriculum is made up of a set of related courses, which in turn, are comprised of related units. The learning experiences in a unit are organized in lesson plans (p. 76)."

When constructing his lesson plans the teacher should remember the following basic rules:

1. The materials used should be selected and used in a general to specific lesson pattern.

2. Any learning program should begin on the interest level and in the interest area of the learner.

3. Units of study should be scheduled in a logical sequence.

4. Study should be planned on a skill development basis, going from simple to more complex.

5. Materials and course of study should be selected upon the basis of which skills the learner will need more often.

6. Each unit taught should be correlated and tied into the other units as a whole, giving the learner an overall view of the material to be studied.

When writing the curriculum, the needs of the learner should always be kept in mind. Almost as important as his need are his wants; for example: if the learner wants to go to college and cannot read he needs to learn to read first. The learner must know that to obtain certain goals, specific objectives must be met. The goals should be stated and accompanied by related subgoals and objectives.

Before the units have been written and the lesson planning made, the software and hardware should be obtained.

Obtain Institutional Hardware and Software

The question in the mind of most new teachers of adult basic education is "What will I order and where will I get it if I knew?" After the learner target population has been evaluated and their needs determined, the person responsible for ordering should obtain the services of a proven expert as an advisor, visit other facilities similar to his, obtain a list of recommended materials from the State Department of Education, obtain publisher information, obtain publisher materials catalogs. After this is done, then order the necessary material.

Conduct Pilot Test

At this time a trial run of the program should be made with a limited number of learners. The trial run should render information about the suitability of the instructional material and about the curriculum in general. If changes need to be made this is the time to make them.

Produce/Acquire Tests

Testing should be done all through the program to check the progress of the learner. Many types of test may be used, but care should be taken not to change series of tests for a given learner. These tests may be teacher produced or standardized. Screening and interviews should be given as a placement guide.

After the learner has been scheduled into the program, pretests or placement tests should be administered. This test could be a standardized test, a reading readiness test or any test which can be used to determine the extent to which the learner has advanced toward his objectives before training starts. The learner should be made aware that this is a test he cannot fail. One example of a good placement test is the Test of Adult Basic Education (printed by the California Test Bureau), which is used with the IPI (Individualized Prescribed Instruction) system. In addition to the placement tests, the learner should

be given regular unit tests and post tests to evaluate the progress of the learner.

Student Selection

In most cases the students who are presented for evaluation and placement are channeled into areas of study based upon the results of their placement tests and preliminary interviews.

Conduct the Program

By this time all the planning and preparation which is necessary to put the program into operation should have been done. The only things left are the management functions. This can be carried out quite effectively with a well-informed and motivated staff.

References

Knowles, M. S. The modern practice of adult education: Androgogy versus pedagogy. New York: Association Press, 1970.

Ryan, T. A. (Ed.). Collection of papers prepared for 1970 national seminars. Honolulu: Education Research and Development Center, University of Hawaii, 1970. (a)

Ryan, T. A. (Ed.). Model of adult basic education in corrections (Experimental ed.). Honolulu: Education Research and Development Center, University of Hawaii, 1970. (b)

IMPLEMENTATION OF AN ADULT BASIC EDUCATION PROGRAM IN A CORRECTIONAL SETTING

Eugene E. Hilfiker
Oregon Correctional Institution
Salem, Oregon

Introduction

In planning the implementation of a program in adult basic education within an institutional setting, the related functions of (a) conceptualizing the system, (b) processing the information, (c) explaining the philosophy and assessing the needs, (d) understanding and defining goals and objectives give us the basis needed for implementing the program. Knowles (1970) describes the process of implementing an adult basic education program as the transformation of program objectives into a pattern of activities. Ryan (1970) also notes that program objectives should be appropriate to the needs and characteristics of the residents of our institutions and should be adapted to the unique environmental factors which characterize the correctional institution population, i.e., lack of motivation and a wide range of individual differences.

In implementing a program in adult basic education, the need is to move away from the all-pervading concern about individual subject matter areas, and to place more emphasis on what can be useful and meaningful to the student. The old dichotomy of vocational versus academic education should be discarded and more concern placed on the motivating and buttressing of the student in his program of career education.

In the correctional setting, there is a need for an adult basic education program that is dynamic, changing, flexible, and functional, along with being designed to go straight to the heart of those who have been committed to our care. The educational program must meet the needs of our residents, not only in terms of the possibilities of the situation, but also in the terms of actual employment conditions as they exist in a modern, free society. Full consideration must be given to present and future economic trends, recent technological developments, placement potential for the resident, and other variables which will determine the success or failure of the program. Correctional institutions have a propensity to adapt "stone age" thinking, concepts and educational practices to their space age, working world programs.

New educational technology can provide the correctional educator with greater individualization of instruction to meet the needs of a particular student at a specific time in his learning development; it can provide greater efficiency of instruction, and release the teacher and administrator alike from the lockstep of class periods. Computerized instruction, dialing a lesson from a central learning-resource center, programmed textbooks, individual lessons from audio-visual devices, and

numerous other learning aids are available and can be integrated into any correctional education program.

Development Through Research and Evaluation

What is being done with some of the latest management and educational techniques in adult basic education? What is available locally and nationally in adult education through visitations, educational literature, conferences, and work shops? Are the teacher and instructor in the correctional institution becoming familiar with the use of program learning materials, team teaching, research and experimentation, group projects, and group and individual instruction? Is research and evaluation being used to plan and obtain the kinds of facilities, techniques, and instructional material that could improve the quality of adult basic education in a correctional setting? These are the kinds of questions educators in the correctional settings should be asking.

In many cases, educational programs within the correctional setting are faced with a shortage of funds to employ personnel to conduct necessary and important research and evaluation. Consequently, the education staff will have to accept this as not only an added assignment, but also as an integral part of their teaching responsibility. Research and evaluation should be ranked high by the education director when assignments are being considered. Members of the staff, such as the case manager, clinical psychologist, chaplin, medical doctor, social services director, group living supervisor, and many others are available and should be used as valuable resources personnel.

In corrections, educational management can be improved if data from research is evaluated and utilized in developing new programs and teaching techniques. The manager should organize his research and experiences in adult basic education in corrections sequentially; looking at the individual differences among the resident-student in terms of intellectual, mental, physical, environmental, cultural, emotional, and hereditary experience in adult education and related sciences have made it apparent that an adult possesses certain unique characteristics as a learner and different teaching and testing techniques must be applied.

Management of Program

The success of implementing any adult basic education program in a correctional setting rests squarely upon the shoulder of the educational director or program manager. The primary responsibilities of the director or manager are to:

1. Plan the program by setting objectives, forecasting and determining future programs and methods of obtaining the goals within this program.

2. Organize by establishing a working relationship between his

staff, and assembling supplies and equipment in such a manner as to obtain the maximum efficiency from his staff.

3. Implement the program by carrying out the plans within the framework as established by institutional policy and program objectives.

A good manager should be capable of creating an atmosphere and setting the stage so that each member of his staff can express the highest qualities and competencies of which he is capable. Managers should introduce new concepts and practices in implementing an adult basic education program. The modern manager in a correctional setting should attempt to adapt and use the behavioral sciences and the systems approach in achieving his goals.

The manager serves the capacity of an advisor and consultant. He observes and evaluates certain instructional goals, shares his thinking with his staff, and helps work out methods of improving instruction. Recommendations may be as broad as suggesting that the teacher or instructor develop a new course, or as specific as a change in the seating arrangement. Nelson (1971) lists seven modern management approaches having elements that can be modified for use in education.

1. Project Teams
2. Management Systems
3. Management by Objectives
4. Span of Control Flexibility
5. Short-Term Consultants
6. Electronic Monitoring
7. On-the-job Training

Another responsibility of the manager is to prepare yearly or biennial budgets to serve as a basis for financial planning, control, and determining programs to meet future needs. Adequate records of all financial transactions should be maintained with the cooperation of the institution's business manager. Cost centers for each discipline, based on objectives of the program, shall be projected for purposes of "Management by Objectives" to determine if the program is meeting its goals within the limitation of the budgeted cost center. Periodic review and adjustment are required to provide the data needed to develop new objectives.

The manager shall make use of the equipment and materials that are available and not gear his program to proposed budgets. It is not unusual to have proposed educational programs deleted from the budget, and the manager must be capable of adjusting to these setbacks and to operate as effectively as feasible. Selection and purchase of equipment and supplies must be determined by the instructional needs of the general education classes and shops.

Planning the Facility

Once the educational staff has established the program objectives, the planning and construction of the educational faxility can be initiated. The first questions are, "How are we going to accomplish the objectives of our program?" and "What do we need in terms of space and equipment?" Space must be designed to obtain the overall objectives of the program.

The teacher is usually called on to assist in the planning of new facilities as well as reorganizing old ones. Teacher involvement is essential in having a well-planned functional facility that will meet the needs and requirements of the students, the teachers, and the instructional program. The teacher is the expert in his field and is in an excellent position to supply the architect with special details required for the teaching of his specific subject matter.

In the past, educational facilities in correctional setting have been designed and constructed to meet the traditional and questionable security needs of the institution. They failed to function as effective learning centers. Unanchored interior walls designed to stay attuned to any curriculum, individual study carrels, modular walls, multi-media rooms, and learning resource centers are lacking in may correctional settings. The teacher or manager should study desirable features of new or improved schools, review the objectives and needs, and then assemble all of this data to determine the effectiveness of supervision and construction. This data, along with stated objectives and planned methods of obtaining these objectives, should then be presented to the institution administrator for his use as a guide in making administrative decisions.

Arrangement, placement, and construction of partitions is the most important feature of interior design of the educational facility. Moveable partitions or accordion-type dividers give flexibility so that students can be arranged individually, in small groups, or as one large group. This flexibility of space readily adapts to future needs, programs, methodologies, techniques, and equipment.

Educational Staff

The most important qualifications to consider in selecting the educational staff are knowledge of the subject matter, skills, teaching techniques, ability to adjust subject matter and instruction to adult differences, ability to communicate with the resident, and a broad concept of the entire adult education program and its relation to the institution. The educational program will reflect the skills of the personnel who are conducting the program and the teacher is the dominant factor in determining the image of the program.

The teaching staff may be obtained from such sources as existing institutional staff, institutional population, public and private schools,

trades, business, volunteers, student teachers, and other correctional institutions.

Education Director

The director of an educational program must function as an administrator, supervisor, and leader. The administrative function comes first because it is a very necessary part of departmental organization. Such items as budgets, inventories, and utilization of space must always be considered. Developing teacher-student, supervisor-teacher, and teacher-supervisor-administrator relationships, along with recruitment and selection of staff, evaluation, rating for salary and promotional purposes, teacher welfare, and working conditions are important responsibilities of the director. Other administrative functions of the education director include developing curriculum and department philosophy, and determing scope of programs.

The supervisory responsibilities include improvement of instruction, promoting professional growth of staff, and evaluating programs, instructional services, student progress and teacher performance.

General Education Teacher

This teacher should be a professional, be intellectually compentent, and have the ability to communicate with residents and staff. He must have patience, the ability to plan a lesson, be sympathetic, and have a deep knowledge of human beings. Above all, he must be flexible and in sympathy and harmony with the objectives of the correctional education program.

Programmer

In selecting a programming instructor, always select a teacher who has never programmed over a teacher who has never taught. Allow him time to develop his course material before you turn him loose on the tasks he has prepared for. This is true with any teacher that is hired for a specialized task.

Vocational Teacher

It is almost impossible to find highly skilled tradesmen with comprehensive knowledge and experience in the "world of work," also who has been trained in the techniques of teaching. The individual for this position must be highly qualified in his trade area and have the potential and desire to learn how to effectively teach all the "tricks of the trade" to the trainees under his guidance. It is practically impossible and unfeasible to train a teacher in a trade within the school setting.

Scheduling Programs

The institutional philosophy, goals, and objectives determine the flexibility of scheduling students, staff, and available facilities for educational programs. The educational staff must work within the limitations and restrictions dictated by the policy of the institution, the staff, available facilities, training aids, equipment, mobility of students, services, security regulations, working hours, assignments and budgets. Levels of intelligence, ability, and goals should play a major part in making management decisions about scheduling students.

The ideal situation, of course, is to have students available for programs scheduled by the educational staff. In a correctional setting, this is usually wishful thinking on the part of the instructor who has isolated himself from the other institution functions. Residents with similar programs just are not committed or released from the institution in neat little groups with identical needs. The traditional classroom has no place in a correctional setting. Curricula class schedule and programing of residents must be flexible and individually oriented if they are to function and survive within the correctional setting. This demands the fullest cooperation, not only from the teaching staff, but from the administrators, department heads and other members of the staff within the system. Each must have a clear understanding of the inherent problems of other programs. No program can be effective without the team efforts of all personnel operating within this setting.

Institution and Community Services

Due to restrictions and limitations of budgets and equipment, many educational programs in the correctional setting must rely on other available sources for assistance. Educators should be cognizant of the contributions institutional residents, staff, retired personnel, civic organizations, labor, business, federal and state agencies, local and state school systems, and other professional personnel can make to the institution's educational program. Existing programs can be expanded and new, exciting, and dynamic programs can be developed if the community is made aware of and sold on the needs of the program.

In using community and institutional resources, consider the needs of the student rather than the needs of administration. Don't endanger programs by getting resource people involved outside of their sphere of knowledge and experience. Knowles (1970) indicates that strong and successful adult basic education programs must have representative committee structures with a high delegation of authority to operate programs. With the administrative and line-staff structure of many correctional institutions combined with other programs, departments and responsibilities, educators will find that organizing a volunteer or advisory program will be one of the most difficult tasks he will face. This can also be one of the most gratifying and rewarding tasks in your program.

Tutoring

The instruction and training of students by volunteers from the community, the resident population, line-staff and other professional personnel can fill an important void in the educational program. Tutoring is usually done on an individual or small group basis which allows individual relationships to develop between the tutor and student. The student receives more attention than would be possible in the classroom setting, thus allowing him time for interaction and feedback. Remedial reading, math and skill development are excellent examples of areas where individual tutoring is very effective. Many students in the correctional setting are high school dropouts, and/or have failed to respond to classroom instruction, and so need specialized individual and small group instruction and training.

Environment

Climate for Learning

Setting the tone, is the first and greatest challenge a manager should have if he is interested in effective education and training in an institutional setting. The educational staff should be obligated to create an instructional tone that will communicate to the residents that the purpose of the staff is to help and not punish. Receiving an education can be fun and it should be the goal of every educator in the correctional setting to develop an environment that is conducive to learning and encourages the student to reach his goals.

The manager/teacher can assist in establishing a climate that is conducive to learning. As a manager and teacher in a correctional setting he must wear many hats. Aside from his custodial responsibilities, he is a supervisor, a teacher, a counselor, and a friend. He is in an ideal position to remove the threat of academic failure so familiar to the 95 percent of the people committed to our institutions. This is the greatest task of any member of the educational staff in the correctional setting. During interviews, the resident should be greeted professionally and with a warmth that will convey to him that this program is extremely important. The educational staff should encourage the resident to develop his own educational goals and means of fulfilling these goals. The student should be made to feel that it is his program and his accomplishment. The instructor should indicate an interest in his program and convey to him that the program is important.

Acoustics, heating, air conditioning, and lighting conditions as well as the decor of the facilities and mobility of students affect the climate and learning environments. The attitude of the staff toward other staff members, students, administration and the total program, contribute toward creating a learning environment.

A realistic plan for a correctional setting includes centralizing the total educational program, i.e., place general and vocational education in

one area; centralize administrative offices, library, reference center, media center, staff lounge and rest rooms; utilize movable partitions. This will result in a complete package that is not only a functional educational center, but will create a closer working relationship between vocational and general education personnel who are working toward a common goal. The instructors and teachers will have the feeling that they are an integral part of the program rather than a questionable contributor to a program that might be located in the far corner of the institution with no relationship to another program housed in another corner of the institution.

Acoustics. It has been proven (Weaver, 1959) that noise interferes with the efficiency of the teacher and students, reduces attention, and makes concentration on tasks very difficult. Noise produces fatigue, dulls mental processes and clouds judgment. Educational units should be located away from the noisy areas of the institution, with the loud shops and equipment being separated from other class areas. The most annoying interruption comes from the moving of furniture or scraping of feet. Numerous types and styles of resident flooring material is available to control this noise.

Heat. Discomfort from heat has a marked effect on students, learning and the student should be exposed to a thermal climate which is conducive to the learning process. In designing a shop, total thermal environment must be considered, keeping in mind that the student is more active than the instructor and requires less heat.

Planning the Instructional Program

Adult education, in recent years, has been experiencing a change from the traditional classroom procedures and "linear step" education. Adult educators are accepting the fact that (a) the individual actually learns in bits, i.e., from the daily paper, television, conversations, and books, and that (b) obtaining an education can actually be interesting and fun. In the correctional setting, educational programs must be open-ended and broadly based programs which allow the resident to maneuver within his field as his interest and goals change.

Learning

Some of the important factors in learning are interest, concentration, self-confidence, repetition, intelligence, memory, past experience, imagination, and a desire to learn. To have a successful adult basic education program, the participants must want to learn, and they must see the need for and relevance of instruction. As they are problem-centered in their orientation to learning, the instruction should be organized around problems rather than subject matter. Adults learn best in an informal environment and a variety of learning methods should be used in teaching them. Students in the correctional setting are adults and should be treated as such.

Curriculum

The curriculum is the basic instructional program, and is characterized by the scope of the subject matter and sequence of the students and instructional material. The course of study includes units, lesson plans, topics, and tasks and is usually accomplished by the education director or other administrative personnel with the assistance of the teachers. Standard textbooks on curriculum design describe five basic principles in organizing instructional material:

1. Simple to complex
2. Best learning sequence
3. Whole to the part
4. Time sequence
5. Step by step

The curriculum in the correctional setting should place emphasis on the individual student, his aptitude and ability, flexible scheduling, and performance objectives so that the student can make an intelligent career decision upon release. The curriculum should be integrated so that the resident will be able to relate his general education to his work assignments, vocational training and the real world. Institution and community resources should be used as meaningful learning experiences to meet the needs of the student.

Course Outline. The course outline is essentially a listing of tasks, topics and sub-topics to be taught. These should be arranged in a sequential order where mastery of one item is prerequisite to the study of another. The course is the most efficient and acceptable unit for organizing most kinds of learning and must be a flexible, dynamic instrument for helping people to learn.

Unit. The unit of instruction usually consists of one or more lesson plans and is concerned with knowledge that is related.

Lesson Plans. Individual lesson plans are prepared from the course outline. They are tied together so that each lesson fits logically into the previous and following lessons. Without this relationship the student will be confused. Each lesson plan must have at least one objective. There are numerous formats for lesson plans and no matter which is used, they should be meaningful to the learner and make effective use of time, space, and personnel.

Hardware and Software

Selecting Hardware and Software

Before buying any new equipment it is important to consider the uses

of the equipment already on hand. However, when considering the purchase of new audio-visual equipment or instructional materials, every instructor who will be using the materials should be involved in the selection process. Equipment purchased without the consent or knowledge of the instructor will probably collect dust. It is equally important to know what kind of software is available to achieve instructional objectives. The capacity and capabilities of hardware should be considered: Can it be used for small or large group instruction as well as individualized instruction? Is it too expensive for its limited use?

Audio-visual equipment and instructional materials take many different forms and formats which may place limitations on their use. The instructor should be conscious of these limitations, and select materials according to the size of his class, the available equipment, flexibility of use, cost, objectives, scope, effectiveness, variety of approach, and interest. Some of the audio-visual aids and instructional materials which are available include: tests, manuals, magazines, radios, television, tapes, projectors, slides, and charts.

In selecting the materials, the teacher must keep in mind his curriculum objectives and have the necessary skills to effectively use the materials. He should be aware of the variables which may affect their use. Prior to using the materials, the teacher should preview and evaluate them so he will know exactly what they contain and be able to determine how they can be used most effectively and efficiently.

Instructional materials and equipment are available from many sources. To simplify the search by the teacher for appropriate materials, literature and reference material should be available in the institution library. Description and evaluation of these aids should be readily accessible along with the evaluations by the staff who has used these aids.

Making Visuals

The simplest of all visuals to produce is the handwritten flip chart. This chart can be made and revised at your own speed. A professional looking visual is printed or typed on white bond paper with a black ribbon for contrast. It is processed in the camera giving you either a film negative or diazo print on the copy board.

Clear crisp projection slides can be made with the use of composition equipment and special lithographic film. Simple overhead projection slides can be made from a variety of equipment and materials. The 3M Company has a transparency maker that can be used right in the classroom. Slides can be made using Polaroid projection films and if you wish to have color you can use the Kodak Ektagraphic Visualmaker which consists of an Instamatic Camera and copy stand. The above are just a few examples of what can be used. With a little imagination, many other innovations or ideas can be used to "jazz" up your presentations.

Programmed Instruction

Education in correcional institutions is chronically beset by so many diverse and often complex problems, that any effort to extend and improve educational opportunities requires unusual idealism and fortitude to face facts and not be fazed by them. During the last few years a remedy has been introduced into the learning process that promises to eliminate some of the serious problems of education in the correctional setting. This is the teaching machine and programmed materials.

Experience with the use of programmed instructional materials in correctional education is still very limited. The South Carolina Department of Corrections reported in 1965 that the results of using programmed material in the field of mathematics and science readily supported the over-all practicability, potential and flexibility of programmed learning in a correctional setting (Dickman, 1967).

The application of programmed learning represents a milestone in the development of teaching methods, and is the next best thing to personalized instruction. If a tutor was used, he would expose the student to new information, test his knowledge and concept of each bit of information, and inform the student if he was right or wrong. If the student was wrong, the tutor would present the information again, perhaps in a different way and check the student again to see if he has learned it. A programmed course does much the same thing. The major difference between a programmed course and special tutoring, is that the book has no way to answer individual questions which may arise.

Today, programmed learning is being used in the classroom as a basic instructional medium replacing the textbook and freeing the teacher to concentrate on individual help for the student. Students learn at different rates so the teacher must cope with supervision and administration problems that arise as the students finish sections of the program. A teacher using programmed material in the classroom must provide material for those students who finish early, or allow them to proceed with the next course.

As a remedial device, programmed learning enables the slow student to review, on his own, that part of the learning sequences which he did not understand the first time around in the classroom. Also, special subjects may be taught where the number of interested students does not warrant a class on the subject.

Programmed instruction focuses on the process by which students learn, rather than on the way teachers teach. Language used in the programs may take many forms such as verbal or pictorial, but unlike a textbook, does not give the author or editor the last word in determining the communication. There is active participation by the learner. He must give a response to the communication each step of the way. This is done overtly by writing down the response, or by thinking of the correct response.

Reinforcement gives programmed instruction a high degree of motivation as it is believed that partial or intermittent reinforcement is more effective in preventing extinction than continuous reinforcement. Reinforcement as feedback informs the individual learner that not only is he what he thinks he is, but that he is becoming what he wants to become in a particular area. Since each student learns at his own rate of speed, the "slow" student is not frustrated by having the "instructional rug" jerked out from under him, and the "fast" student is not held back and bored by instruction he has already learned.

Programmed learning systems have been adapted to various types of teaching machines, language laboratories and special textbooks. There are two basic types of programmed instruction, linear and branching. Linear programming as the name indicates, breaks its subject matter into small sequential bits, moving the learner from A to Z. Linear or straight line programming is usually credited to B. F. Skinner of Harvard University, and is the type most commonly used in educational programs today. A variation of the linear program is found in what might be called a "looping program", in which students are given the opportunity to get into either remedial or enrichment material at appropriate points in the program or to "bridge over" certain steps designed for less able students.

Branching or intrinsic programming, in which the student precedes from A to Z through many alternate routes supplied by multiple reponses, has been developed largely by Norman Crowder. These two methods are distinguished by the length of the frames and the correct answer that immediately confirms the student response. Another distinction between the linear and branching programs, is the arrangements of frames in the program, i.e., vertical or horizontal.

We must still not lose sight of the fact that the student must want to learn, and while programmed instruction with its constant reinforcement requires a lot of motivation, there is no easy road to learning. Programmed instruction should be ideal for and have far-reaching application to education in correctional institutions because of the nature of the problems and challenges which are peculiar to residents.

Evaluation of Instructional Program

After the curriculum, course of study, training aids and lesson plans have been developed, a trial run of the program should be conducted to determine the programs effectiveness in reaching the goals of the students. Educational programs may require revisions which are based on experience gained in teaching the course or on new developments. Revision of any course of study must be done in a systematic method. It may be the type of content, or modernizing from the point of view of methods. After the initial trial run of the program, there should be a continuous evaluation and feed back to the administration of course content and media.

Standards and Evaluation

The improvement of any vocational or academic program begins with evaluation. We need to find out the extent to which the pre-determined purposes of the program have been achieved in order to make decisions concerning the continuation of a particular educational program. The main purpose of evaluation at this stage of the game, of course, is to improve the adult basic education programs being implemented in the correctional setting. Tests should be used to stimulate and guide further improvement in helping adults achieve the goals they desire. Through the tests, we can see differences in methods and discover unmet needs. In the correctional setting, tests can be used to evaluate and to improve a program, to evaluate the progress of the student, and as an instructional tool.

There are several types of tests available to meet program or learner requirements. By becoming familiar with the uses and purposes of the different tests, the user can choose the most appropriate one to meet his needs. Tests can be classified according to:

a. number of testees: individual, group

b. behavior being sampled: achievement, personality, aptitude, interest, and mental abilities

c. mode of answering: paper and pencil, performance

d. purpose of testing: diagnostic, follow-up

e. nature of instrument or procedure: interview, observation, commercially prepared, teacher prepared

f. time: pre-requisite, pretest, supportive, posttest (Ryan, 1972, p. 184).

Ryan (1972) gives a more detailed explanation of several of the above listed tests:

Pre-requisite test

This test is administered prior to a student's enrollment in a program. It provides information to determine if the potential learner can benefit from instruction and is capable of participating in the program. The institutional committee involved in the programming of the new resident can use this information as a guide for programming the offender into educational and social programs. This test will indicate a student's cognitive-learning readiness factor, as well as his aptitude, attitude, and interest.

Pretest

This type of test is administered at the beginning of a program and provides information on the level of the student's knowledge or skills prior to being given any instruction. The instructor should be extremely careful with this type of test as it could appear threatening, thereby turning off the student. To eliminate a chance of adverse reactions, let the student know why you are giving the test and that he cannot fail.

Supportive test

This test is given during the program and provides information about the progress of the student. Information gained from this type of test can also be used to make any needed program changes.

Posttest

This test is given at the conclusion of the program and indicates changes in behavior of the learner. The posttest should not be used to pass or fail students, but to compare student's behaviors at the conclusion of the program with the established objectives of the program.

Follow-up Tests and Questionnaires. The time factor and mobility of residents being released from the institution make it very difficult to administer this test. Questionnaires with return envelopes may be mailed to residents who have been discharged, but there is little assurance that they will be returned. Evaluation by this method is very difficult as there is a propensity for only the successful graduates to return these tests and questionnaires and we still have the failures to consider.

Programming Students

On the basis of the instructors evaluation of the prerequisite, pretest and academic placement tests, the vocational counselors appraisal of vocational interest and aptitudes, and the case managers appraisal of social, moral, medical and psychological assets, the perspective student is programmed into a realistic educational program. In programming residents into educational programs, time of entry along with estimated date of completion and specific goals to be obtained must all be given full consideration. Vocational students should be programmed into realistic and meaningful programs by taking into consideration placement opportunities of the locality into which he will be released.

Comprehensive records and tests must be kept, compared and reviewed periodically along with re-testing, re-assessment, and re-interviewing for possible re-programming of either the student or the instructional

course itself. With this up-to-date and comprehensive data, the student can be programmed into a lower or higher level of program, or the skills and knowledge listed on the pre-requisite tests can be added or removed from the objective of the course.

References

Appley, L. Management and the American future. New York: American Management Association, 1954.

California State Department of Education. Development of adult education in California. Sacramento: State Department of Education, 1953.

Clark, D. Implementing a program materials center in a correctional setting. In T. A. Ryan (Ed.), Collection of papers prepared for 1970 national seminars. Honolulu: Education Research and Development Center, University of Hawaii, 1970.

Dickman, J. Programmed learning: What it is and what it does. The Journal of Correctional Education, July 1967.

Gilbert, H. A physical plant design for adult basic education in correctional institutions. In T. A. Ryan (Ed.), Collection of papers prepared for 1970 national seminars. Honolulu: Education Research and Development Center, University of Hawaii, 1970.

Glaser, B. The effectiveness of a prison and parole system. New York: Bobbs-Merrill, 1964.

Hook, S. Education for modern man. New York: Dial Press, 1963.

Johnson, F. To be a superior teacher. The Agricultural Education Magazine, April 1968.

Kennedy, W. Making visuals. Business Publication, January 1971, p. 26.

Knowles, M. The modern practice of adult education. New York: Associated Press, 1970.

Mager, R., & Beach, K. Developing vocational instruction. Belmont, CA: Fearon Publishers, 1967.

McCollum, S. What do you have for a dummy? Washington: U. S. Bureau of Prisons.

Nelson, R. How one state defines its role and acts to implement it. American Vocational Journal, November 1971, p. 39.

Noble, H. Teaching machine and programmed learning in a correctional institution. American Journal of Corrections, November-December 1962, p. 18.

Ryan, T. A. Model of adult basic education in corrections (Experimental ed.). Honolulu: Education Research and Development Center, University of Hawaii, 1970.

Schoenbals, N. The a-v hardware is here, but where's the a-v software. Industrial Arts/Vocational Education, June 1969, pp. 28-29.

Smalley, L. Evaluating your program. Industrial Arts/Vocational Education, June 1965, p. 23.

Spriegel, W. Elements of supervision. New York: John Wiley, 1957.

Warmbrod, R. Supervised experience--its place in learning. The Agricultural Education Magazine, June 1965, p. 23.

Weaver, G. Shop organization and management. New York: Putnam, 1959.

USING RESEARCH TO IMPROVE INSTRUCTION

Reis H. Hall
Federal Youth Center
Ashland, Kentucky

Corrections must generate knowledge leading to effective ways of returning offenders to society who are able to function productively. Of all the tools of corrections, none has shown greater promise than education in moving us in this direction. Tangible benefits resulting from correctional education experiences are well documented (Cohen, Filipezak, and Bis, 1965; Glaser and Ross, 1970; McKee, 1967). We easily demonstrate academic gains resulting from our educational programs, but their effect on the offender in terms of his successful reintegration into society are less clear (Glaser, 1964; Waldo, 1969). The indications are that correctional education programs have little or no positive impact except for a few highly specific groups and for many others they may have a negative impact on rehabilitation (Brooks and Janney, 1965; Glaser, 1964).

This paper will explore the conditions which have so greatly limited the ultimate effectiveness of correctional education, it will present observations on the context and environment in which correctional education programs operate, and will propose a theme/goal for corrections based on a viable conceptualization of offender needs. This paper will then deal with the ingredients for implementing this theme and present the research evidence that forms the basis of this presentation.

Correctional education programs including vocational programs have operated largely in a vacuum. They do what they do with the offender without any real regard for where he came from before he entered the program or what he does after he leaves. Systematic approaches must be developed in this area. Other things being equal, they add greatly to the efficiency and effectiveness of any program (Carkhuff, 1971). Selection, training, and placement are clearly the processes included in systematic consideration of a correctional education system.

Our selection procedures rely largely on a group intelligence test, the G.A.T.B., and an academic achievement test (Hall, 1967a). In addition we have in several settings provided pre-vocational shops where students try their hand at a variety of vocational activities to test their potential for success in the programs provided. There is overwhelming research evidence that this technique for selection has a high level of validity (Carkhuff, 1969). The tests themselves and the ways they are used add almost nothing to valid selection.

A system of program effectiveness studies to evaluate the immediate goals of correctional education programs would require tallies of:

1. the number of individuals placed in recommended programs
2. successful completions of recommended training

3. community placements in areas of training (Hall, 1967a).

Unfortunately there is almost no data available in any of these areas (Waldo, 1969).

Only in the past two years has anyone in the Federal Bureau of Prisons ever bothered to review classification material to see how many program recommendations were implemented and how many program completions followed. Until managers routinely make at least this level of operational research thrust, it's doubtful that any of our programs will actually make a delivery to the people they purport to serve.

In the academic area, corrections has made constructive use of a large number of forward looking techniques including programmed learning and teaching machines (Craig and Gordon, 1967). Operant conditioning and behavioral modification approaches have demonstrated their effectiveness in well-designed and implemented research studies. The two most notable of these as reported by the President's Commission on Law Enforcement and Administration of Justice in The Task Force Report: Corrections are the C.A.S.E. project (Cohen, 1965) and the Draper project (McKee, 1967).

Three follow-up studies (Glaser, 1964; Hall, 1963; Pownall, 1969) show that federal releasees make very little direct use of the skills which they learn in correctional training programs. Only about 25 percent find employment within the first several months following release in the vocational areas in which they received training.

These three research studies themselves with very similar findings offer some interesting contrasts in methodology and execution which have important implications for the institutionally based program manager. The Glaser and Pownall studies were supported by large grants and used a staff of researchers in the community to gather information by directly interviewing the releasees. The Hall study in contrast was conducted entirely by institution personnel with full-time responsibilities for a variety of regular institution programs. No money was budgeted for this study and the methodology depended on a mailed questionnaire for gathering the information on which the study was based. This study demonstrated that even in this day and time significant research projects can be accomplished without vast money expenditure when the tasks are well-organized, manpower is efficiently utilized and research tools creatively used. In this instance the mailed questionnaire which usually yields a return rate of 15 to 30 percent was made to yield returns of 70 to 80 percent. This was achieved by virtue of pre-release interviews with the study population which made a direct appeal to their altruism, by personalizing the questionnaire, and by follow-up appeals to the study population when they failed to respond to the initial questionnaire.

What we do must be goal oriented. If we fail to evaluate our programs in terms of tangible benefits resulting from them, we are either incompetents or charlatans. For the most part in corrections, our goals have been generally platitudinous and our willingness to put our programs

to the "tangible benefits" test less than enthusiastic. Goals--immediate, intermediate and long range--must be set before realistic evaluation can be undertaken.

Corrections, as it has moved from a punitive custodially oriented system to one which sets as its goal the reintegration of the offender into society, has conceptualized its programs in terms of the medical model with its case histories, diagnostic labels and psychiatric treatment strategies. Unfortunately this conceptualization of the correctional process has held corrections back when it was intended to move it forward (Hall, 1967a). Among the reasons that the medical model has not provided corrections with a functional system is that it has never been understood or accepted by the offender, correctionsl personnel or the general public. Even more important is the fact that no particular treatment strategies follow from the diagnostic categories we place on people. It doesn't make any difference whether we label a man in prison as being schizoid, inadequate personality or a sociopath so far as what we do with him in treatment is concerned. The label we place on him is meaningless, or worse, destructive, and the diagnostic games we play totally disfunctional (Carkhuff and Berenson, 1967; Hall, 1967a).

Lack of understanding and acceptance of a system by the participant denies that system the integrating theme that is essential to the participant's effective and efficient functioning (Carkhuff, 1970). On the other hand a well understood and accepted theme will, other things being equal, facilitate effective functioning (Hall, 1967a).

Despite the fact that correctional education is frequently seen as the critical treatment modality, it is almost always been a spoke rather than the hub of the treatment. The program at the Federal Youth Center at Morgantown, West Virginia, which probably provides corrections with the first goal oriented, systematized and well implemented program has placed cottage life at the hub with "...most important decision making authority in the hand of cottage staff (Karacki, 1970)." Classically in the federal system and in most state correctional systems, casework services are set at the hub of institutional programming. Occasionally psychiatric services have been placed in this position. In several instances significant correctional education programs have actually been isolated from the institution as a whole (not a part of the wheel at all).

Despite our reluctance to set the educational program at the hub of the institution program, there is a very good reason for so doing. First, our educational system is the single most important mechanism provided by society to prepare people to take their place in the adult world. A concept of one's self as a student or trainee has inherent in it, a sense of movement, growth, expectation and, ultimately, emergence or becoming. It is a concept that facilitates movement from one role to another. In corrections it can facilitate movement from a concept of self as a convict or delinquent to that of adult/citizen. This is dramatically illustrated in project Newgate, an Office of Economic Opportunity funded prison college program where prisoners are exposed to a college situation within the prison where they in fact become college students. Upon release they move into a college setting with a role and a concept of

themselves as students ultimately to step out of this role into the role of adult/citizen. How different it is for the typical offender who plays the role of convict while in prison and then moves to the community as an ex-convict. Only in a delinquent subculture does an ex-convict have a viable role.

Our prison education system has the added advantage that it can and has, at least in a few instances, demonstrated immediate benefits in terms of academic material learned. This cannot be said as strongly for any other correctional program. Finally by placing education at the hub of our system, an integrating theme that is readily understood and acceptable to offender, staff, and public can be readily evolved.

The objective of corrections has been described variously by our leaders as the correction of the offender or the reintegration of the offender into society. This translates in an educational model to the goal of the full actualization of the potential of the offender. The central technique for achieving this goal becomes training. When we concretize these notions our theme evolves as follows.

The offender is an individual with limited skills in all areas so that when he is faced with a problem he can respond in one or two ways only. In reality it is more often one than two. Typically he strikes out with blind anger or he runs away. If delinquency is the result of a limited response repertoire, then our job in corrections is to provide him new skills with which to cope with life. We have now taken a meaningful abstraction--the full actualization of potentials--and operationalized it in terms of providing him with new skills for living through training.

Simply stated, delinquents are delinquents because they have limited skills with which to cope with their lives. The job of corrections is to train them with new skills that will increase the probability that they will be able to cope with their lives more effectively. With this, corrections is provided with a new model and a new theme--the skills acquisition theme.

There are three basic elements to be considered in implementing the skills acquisition theme. They are the teacher, the program, and the delivery system itself. There is a significant body of research that has important application in correctional education programs that bears directly on these three elements.

In Helping and Human Relations, Volume II, Carkhuff (1969) states, "Children and students of parents, teachers and other significant persons who offer high levels of core facilitative and action oriented conditions improve while those of persons who offer low levels of these conditions are retarded in their development (p.8)." He cites an extensive body of research evidence supporting the view that the core facilitative and action oriented dimensions are related to learning. These studies make it clear that the effective teacher is not just someone who shares his knowledge with the student, although this is also a basic ingredient

(Hall, 1965), but rather that the knowledge is imparted within the framework a high level facilitative and action oriented relationship.

The facilitative and action oriented dimensions are human relation skills. Carkhuff (1969) began his research thrust by asking the hard-nosed question: "What are the things that effective counselors do that result in tangible benefits to the helpee?" In the process of his studies Carkhuff isolated a number of variables which when effectively communicated to the helpee, resulted in the helpee's improved functioning. He also found when these variables were absent in the helper the helpee did not get better. In fact sometimes he got worse. Carkhuff then discovered that no matter what the counselor's particular system or professional background might be, if he was successful he communicated in terms of these variables and used his specialized training in a secondary way. As he continued his work in this area his research demonstrated conclusively that not only effective counselors and therapists had these skills, but that high functioning teachers, parents, in fact high functioning people in every human relations situation had them. What began as a very limited investigation of effective counselors led to a universal truth about effective people in general (Hall, 1971c).

Some of the essential things Carkhuff (1969) discovered in his research were that all human relationships have two basic elements that the individual must bring to the situation in order to be effective. The first of these elements is that the individual must be able to <u>respond</u> to the other. By this we mean he must be able to look at things from the other person's frame of reference and be able to express this in the respect, genuineness and especially in the understanding for the other that he communicates with words and actions. The second element is that the individual must be able to <u>initiate</u> from his own frame of reference. He must be able to reveal himself, attend to what's going on between himself and the other individual and give his position to the other individual in ways that the other person can use constructively for his own growth.

Among the responsive elements, Carkhuff (1969) defined empathy, genuineness, respect, and concreteness. These are the facilitative dimensions. For the action oriented element he defined confrontation, immediacy, and self-disclosure. The rigorous research studies that Carkhuff conducted required that operational definitions be developed for these abstractions. Having done this for his research led directly to the remarkable training system which he has developed to teach people these skills. It is objective that can be operationalized and can be systematically taught.

Effective programs differ from ineffectual programs in that effective programs are goal oriented and they develop the steps for getting there. In short they are systematized. Extensive evidence in the area of helping and human relations shows that systematic training results in the development of skills in the trainee in very short periods of time that can rarely be demonstrated by traditional training programs in counseling and psychotherapy. Carkhuff (1969) presents a great number of references confirming this. A considerable number of research studies in

corrections also confirm it (Carkhuff, Banks, Berenson, Griffin & Hall, 1971; Hall, 1971b; Megathlin, 1969; Montgomery, 1971; Watts, 1971). Trainees in these programs had representatives from every discipline, program and area of corrections and demonstrated consistent significant gains in skills through training irrespective of the setting or the background from which the trainee came.

While systematic approaches make their contributions in terms of the program itself, the critical element is the trainer. Carkhuff (1971) states that, "If the trainer is functioning at high levels of the dimensions on which the trainee is being trained, the probability of the success of training with any trainee population is high. If the trainer is functioning at low levels of relevant dimensions, the probability of the success of training is low (p. 185)."

In addition to the system and the trainer himself let us now look at the critical sources of learning in all training. When we think of teaching traditionally we think of the didactic approach. Teachers tend to emphasize lecturing, reading, discussing and the reporting techniques that characterize the didactic approach. In some areas, particularly in the social sciences, teachers have tended to ignore both the modeling and the experimental sources of learning. The more goal oriented, substantive and relevant the skills we are teaching, the more likely we are to make extensive use of the experiential and modeling sources of learning. In such subject areas as physical science, English, mathematics, and physical education, teachers routinely provide a didactic presentation of the material to be learned, show by their own example how to do it and provide situations in which the student can practice the skills to be learned. If the trainer does not provide a model with which the trainee can identify and emulate, no training can take place. In training, as in helping, the trainer must have something that the trainee needs and the trainee must recognize this.

In meaningful training, the experiential source of learning must be real. It must train in real skills--not busy work to take up time until the bell rings. Experiential situations must be presented in an integrated learning situation with the didactic and modeling sources in a viable mix based on sensitive trainer discriminations of what will be most effective at the moment.

In its essence the training model is a simple one. The skills acquisition theme is understandable and acceptable. In addition to this there is a significant technology available for training in the basic skills in all areas. These will significantly expand the repertoire of responses available to the offender. In turn this will increase the probability that he will leave our programs able to cope with himself and his world more effectively than when he was admitted.

Let us look briefly at the three basic skill areas to be developed in implementing the skills acquisition theme. First, there is the physical area. Corrections has resources to develop meaningful physical education programs for the offender. The technology is there and is

CONTINUED

3 OF 7

well documented and in addition, norms are available in a significant number or critical physical skill areas. In a significant study conducted at the Illinois Youth Commission Reception Center for Boys (Boswell, Henning and Levy, 1969) significant physical fitness deficiencies were demonstrated in the delinquents committed there as compared with boys in the same age range on national norms. Even more significantly, this study found that the older delinquents showed more pronounced deficiencies than their young counterparts, thus indicating an accelerating deterioration for these youg people. This study also observes that little attention has been give to this critical area by corrections and it notes there is significant resistance to the development of programs in this basic area of life. The authors attribute this to the generally held belief that, "Delinquents are long on brawn and short on brains (p. 22)." In conclusion they emphasize that, "There is much wisdom in the old adage of a sound mind in a sound body (p. 22)."

In the intellectual sphere there are a variety of proven programs in the academic area (Cassell, 1971; Cohen, Filipczak and Bis, 1965; McKee, 1967). We can demonstrate less in the way of tangible benefits for our vocational programs but there is no question that the technology is there if we will commit ourselves to its use. A promising program in this area is the vocational/occupational cluster approach at Morgantown where students receive general instructions to prepare them for employment in aero space, graphic art or electronics. A second program just now beginning at Ashland offers a comprehensive training program in automotive repair divided into training modules extending in time from a few weeks to several months each. Each module provides salable skills in their own right so that if a trainee has only a short time for training he may learn motor tune up, wheel alignment, or service station attendant duties, any of which offer employment opportunities in the community. On the other hand a trainee can profitably continue in training for as long as two years, progressing through such modules as transmission overhaul, general mechanics, and diagnostic technician. Each training module is further broken down into skill stations in a human relations skill's program as an integral part of the total system of training.

Finally in the emotional/interpersonal area--certainly the most difficult of the three basic skill areas of living in which to develop systematic programs--the work of Carkhuff provides us with a proven system of skill training with which we have extensive experience in corrections both in training staff and inmates (Hall, 1971a). Tangible benefits to offenders exposed to counselors, trained systematically in human relations skills, have also been demonstrated (Hall, 1971d). Inmate/helpees at Atlanta were asked if they were able to resolve the problem they brought to their counselors who had been systematically trained in the Carkhuff model (Megathlin, 1969). Eighty percent said that they had fully or partially resolved their problem as the result of this intervention (Hall, 1971a).

In summary then, this paper presents a comprehensive model for effective correctional education programs based on a skills acquisition theme which attends to the offenders' needs in terms of what he brings

with him to the institution and what he will return to upon release. The paper deals with all the ingredients of effective programs. It presents extensive research finding. These show that systematic training programs operated by high functioning people using all the critical sources of learning to develop real skills in all the basic areas of living can readily be developed in corrections.

References

Boswell, H. A., Henning, J. J., & Levy, R. H. Physical fitness among delinquent boys. Journal of Correctional Education, 1969, XXI.

Brooks, E., & Janney, R. Base Expectancy: 1001 youthful offenders. Washington, D.C.: Bureau of Prisons, 1965.

Cassell, R. Project pride. Ashland, Ky.: Federal Youth Center, Bureau of Prisons, 1971.

Carkhuff, R. R. Helping & human relations (Vol. I & II). New York: Holt, Rinehart, Winston, 1969.

Carkhuff, R. R. Consultation: Rhode Island training school for boys. Springfield, Mass.: American International College, 1970.

Carkhuff, R. R. The development of human resources. New York: Holt, Rinehart, Winston, 1971.

Carkhuff, R. R., Banks, G., Berenson, B. G., Griffin, A. H., & Hall, R. The selection and training of correctional counselors on physical, emotional and intellectual indexes. Springfield, Mass.: American International College, 1971.

Carkhuff, R. R., & Berenson, B. G. The sources of gain in counseling and psychotherapy. New York: Holt, Rinehart, Winston, 1967.

Cohen, H. L., Filipczak, J. A., & Bis, J. S. Contingencies applicable to special education. Washington, D. C.: Office of Juvenile Delinquency & Youth Development, U. S. Department of Health, Education & Welfare, 1965.

Craig, W. O., & Gordon, G. K. Programmed instruction, teaching machines and adult education. Journal of Correctional Education, 1967, XIX, 16-22.

Glaser, D. The effectiveness of a prison and parole system. Indianapolis: Bobbs-Merrill, 1964.

Glaser, E. M. & Ross, H. L. An evaluation of the effectiveness of the adult teaching machine at the federal correctional institution, Lompoc, California. Washington, D. C.: Federal Prison Industries, Bureau of Prisons, 1970.

Hall, R. H. A study of post-release work experience of federal reformatory vocational trainees. Petersburg, Va.: Federal Reformatory, Bureau of Prisons, 1963.

Hall, R. H. The role of the institution teacher. Supplement to Re-educating confined delinquents. Washington, D. C : U. S. Department of Justice, Bureau of Prisons, 1965.

Hall, R. H. Manpower development and training act and the federal bureau of prisons. Washington, D. C.: Bureau of Prisons, 1967. (a)

Hall, R. H. Proposal for a total terminal program of remedial education. Washington, D. C.: Bureau of Prisons, 1967. (b)

Hall, R. H. A status report: Helping and human relations in the bureau of prisons. Washington, D. C.: Bureau of Prisons, 1971. (a)

Hall, R. H. A descriptive and evaluative report on the first Louisiana State University correctional counselor training institute. Baton Rouge, Louisiana: Division of Continuing Education, Section on Law Enforcement, Louisiana State University, 1971. (b)

Hall, R. H. Helping & human relations in corrections. Paper presented at the first graduation exercise at the Rhode Island Training School, Training Academy, Providence, Rhode Island, March 26, 1971. (c)

Hall, R. H. Helpee perception: Atlanta correctional counseling program. Washington, D. C.: Bureau of Prisons, 1971. (d)

Karacki, L. (Ed.). Robert F. Kennedy youth center: First annual report. Morgantown, W. Va.: Federal Youth Center, 1970.

McKee, J. M. Experimental project to increase the educational achievement of institutionalized offenders through programmed instruction. Elmore, Alabama: Rehabilitation Research Foundation, 1967.

Megathlin, W. The effects of facilitation training provided correctional officers stationed at the Atlanta federal penitentiary. Washington, D. C.: U. S. Department of Justice, Bureau of Prisons, 1969.

Montgomery, C. Functional helping and human relations. Lompoc, California: Federal Correctional Institution, 1971.

Pownall, G. A. Employment problems of released prisoners. Washington, D. C.: Manpower Administration, U. S. Department of Labor, 1969.

Waldo, G. P. Research in correctional education. Journal of Correctional Education, 1969, XXI, 4-9.

Watts, R. Helping and human relations: Functional counseling. Chillicothe, Ohio: Ohio Correctional Academy, Ohio Division of Corrections, 1971.

USE OF RESEARCH TO IMPROVE INSTRUCTION

Lawrence A. Bennett
California Department of Corrections
Sacramento, California

With the national focus on correctional improvement it is indeed timely to examine new ways of approaching old problems in education and to do so in the framework of research and evaluation. But before proceeding there must be some agreement as to the nature and meaning of research. First, a very traditional approach is to consult a dictionary. Here will be found such ideas as, "a careful search" and, "a critical and exhaustive investigation or experimentation having for its aim the revision of accepted conclusions, in the light of newly discovered facts." These views are somewhat nebulous and provide little in the way of guidance as to how to make use of research. More recently (Emrich, 1972) two somewhat more practical definitions have emerged. The first of these depicted research as the application of scientific principles toward the solution of problems. The second defined research as a systematic approach to the reduction of uncertainty or ambiguity. As can be seen, all of these definitions are very close together but emphasize slightly different aspects of the problem.

Having decided upon a group of concepts that define what research is, it is now necessary to further specify the nature of research as it applies to the task at hand. No doubt someone had clearly in mind how research related to improved instruction but it would appear that there are at least two distinct ways of viewing the problem.

First, research can be seen as that discipline that provides a body of knowledge composed of findings, results, and conclusions that can be examined in an attempt to find new solutions to old problems. Here a return to the first dictionary definition. "A careful search" is required to wind one's way through the maze of studies that are reported in the literature. To review all studies would be too exhausting to consider. Therefore, the careful search involves the selection of those studies that have both relevance and can show evidence of having sufficient scientific rigour to provide some assurance that the findings or results were not the result of chance or biased anticipations. A portion of the material to follow will be devoted to what can be learned from the results of research already conducted.

These statements lead rather naturally to the second view of research. From this perspective, research is viewed more as a tool or a method than as a body of knowledge. Research then becomes a way in which an individual goes about learning new ways of doing things. Both approaches are important, but it is the application of research methods that will receive the greatest emphasis in this paper, for it is less well understood and therefore less utilized than the search for relevant findings from completed research efforts.

Relevant Research Results

In determining what kinds of research findings might have application in the field of adult basic education in corrections, it would appear that a broad sweeping approach will provide more relevant knowledge than examination of the research in the specialized area. New ideas may emerge from only tangentially related areas of study; fundamental aspects of instructional approaches may manifest themselves in a variety of different settings. Thus, findings derived from psychological studies may be of value as they provide a better understanding about the nature of the students to be taught and how they approach learning tasks. Results from adult basic education programs in the community may have considerable value in assisting in the planning for programs in the correctional setting in that, in both cases, older individuals are involved. At the same time, the conclusions growing out of experimental programs at elementary grades in regular school settings should not be ignored, for some of the basic principles found there may be of considerable value in the program under consideration.

This broad perspective is the background against which the basic learning principles are viewed. These basics are presented, not with the belief that they are new, but rather because they seem often to be overlooked in usual classroom instruction.

Some Brief Basics

Only the highlights in this area will be touched upon. One of the first items of importance in facilitating learning is the meaningfulness of material to be absorbed. The effect of this variable has been demonstrated countless times through experimental studies; the studies of McGeoch (1930) and Guilford (1934) can be cited as illustrative.

Another aspect of learning that related to motivation can be categorized as "knowledge of results". This allows for two elements to come into play. First, it provides for self-corrections, and secondly, it sets up a situation where the individual is in competition with himself. Such competition is considerably less threatening than when one is placed against an opponent who may be more skillful or seen as having greater mastery of the subject matter. This is, of course, very important when the nature of the student is understood--not simply an individual who has reached adulthood without having been given an opportunity to gain an education, but rather a person who has been subjected to repeated failures in various educational settings. The classic experiment demonstrating the power of what we now call "feedback of results" is that of Thorndike (1927) with the results of a vast array of studies being reviewed by Postman (1947). The value of such procedures appears to be so obvious as to be classed as self-evident. Unfortunately in educational circles such a basic principle is sometimes forgotten when it comes to everyday instructional practices. Teachers that do not evaluate the progress of students in any objective manner but make frequent comments such as, "Keep working--you're doing fine" would fit into this category. Others may give quizzes, exams, or take other kinds of work samples but return corrected papers two or three days later. People need almost immediate information about how they're

doing in order to progress. Later the point will be discussed that students, teachers, administrators need to know the state of their progress toward their goals in order to improve.

A third item that needs to be kept in mind is related to how practice sessions are established. In most situations distributed practice tends to produce learning of a more lasting nature. The work of Ebbinghaus (1885) has been cited as one of the first demonstrations of this effect which has been replicated many, many times since.

The celebrated "law of effect" of Thorndike (1927) is another basic in the area of learning. Simply stated, the principle points up the fact that responses to a situation that elicit positive conditions are likely to be repeated. As can be seen, this approach is very closely related to reward and punishment; the use of various kinds of reinforcements are of sufficient importance that they will be discussed separately and in greater detail at a later point.

Learning theory is far from supplying all the answers that teachers need, but the concept of instrumental behavior introduced by Skinner (1938) is an important one that should be borne in mind in instructing adults, particularly in the correctional setting. From a common sense point of view the application seems obvious--adults are more likely to learn those skills that are of most value to them in terms of assisting them to progress toward some objective they have in mind. This has been noted most recently by Sepede (1972) who emphasized that in working with adults it is important that the teacher assess the need the person has for the learning activity. He comments, ". . . that learning must be done by the adult himself and that all study activities involve the learner as actively as possible. Yet, too often, the teacher . . . is inculcated with the idea to cover all the material in a prescribed syllabus or textbook without considering its relevance to the needs of different adults enrolled in the class . . . (p. 289)"

The last of the basic concepts that will be referred to is that the segment of material presented at any given time be in terms of "graspable units." In beginning phases the units may have to be quite small, but it is essential that they are of such a size and of such limited complexity that the learner is assured of successful accomplishment. As skills increase, both longer and more complex learning tasks can be presented to the student, but advancement should be in terms of the student's progress in succeeding on tasks less difficult. Here the work of Skinner (1948) is again apparent as he moves toward operant conditioning and the shaping of behavior.

The Nature of the Students

The kinds of students likely to be entering the adult basic education program present a number of identifiable characteristics. They are older, ranging in age from 18 to 65. They are, or have been, delinquently oriented. They are likely to be of minority ethnic origin and from lower socio-economic levels. They will have had, except in rare cases, a long

history of failure in academic pursuits in the past. How do all of these background characteristics affect learning potentials? In the following section, various aspects will be examined in detail one by one.

Effects of age. In our folklore we have two opposing views. The first and most believed is, "You can't teach an old dog new tricks." The contrary position, "You're never too old to learn," comes in a weak second. What are the facts of the situation? Wechsler (1958) reports a slight decline in intelligence scores between age twenty and thirty after which there is a steady downward trend. However, the rate of decline is slight, less than 0.5 percent per year. Dealing more directly with the learning process, Thorndike (1927) conducted experiments to determine the extent to which age interfered with acquiring new information and skills. He found that the ability to learn was not greatly impaired. In general, adults can learn, but at a slowly declining rate of about 1 percent a year from ages 45 to 70 years. Lorge (1966) reexamined the work of Thorndike and noted several interesting aspects of adult learning. First, while the efficiency of learning (the amount of new skills acquired per unit time) might be somewhat less than for younger students, the quality was higher and there was a somewhat greater retention level. He attempted to further clarify the distinction between ability to learn and efficiency of learning. As we relate these findings back to Wechsler we may conclude that the capacity or ability to learn is very slightly affected by increased age, while the effects on efficiency are somewhat greater. Thus, translated for the topic with which we are dealing, the older inmate has the potential to learn but it may take him a somewhat longer period of time to achieve goals. The key variable then appears to be somewhere in the area of motivation.

Delinquency, Intelligence and Learning. The fact that people in correctional facilities are delinquently oriented or have a tendency to engage in criminal activities comes as no surprise to anyone. The question is, what has this to do with their ability to learn to read, write, and do simple arithmetic? One of the better discussions about the relationship of delinquency, intelligence, and school achievement is that of the Silberbergs (1971). In discussing the matter, which they view as something of a dilemma, they note, "Some indication in the literature that the delinquent . . . does show a lack of abstract linguistic ability. (p. 22)." They cite Wechsler (1958, Levi (1943), Diller (1952), Schulman (1952), and Rutter, Yule, Trizard & Graham (1966). This view also has the support of such eminent authorities as Rogers (1951) and the Gluecks (1952). Despite this accumulation of evidence, it must be remembered that what is reflected is a general tendency; not all criminals or delinquents exhibit this pattern in though processes. However, to reach the majority of a class in a correction setting, it would be well to select material that relates to concrete manipulations or tasks that involve abstraction without requiring verbal skills. Jensen (1969), for example, postulates two levels of learning ability. The first, Level I, is seen as associative ability which can be measured by paired-associate learning. Level II is conceptual-abstract. This can be assessed

by such measures as the Raven Progressive matrices. Given the possibilities of these differeing kinds of learning ability, are there ways to make use of such knowledge? The work of Rohwer (1971) suggests that there are specific ways of approaching this problem. Building on his earlier work with Ammons (Rohwer & Ammons, 1971) he argues that there is an approach to increasing learning skills by use of concrete, explicit, and specific instructional programs to assist students in mastering elaborative skills--to actualize the capacity for imaginative conceptual activity. These include, "(a) envisioning objects when presented with their names, (b) naming objects seen, (c) making up sentence descriptions of episodes involving pairs of objectives, and (d) envisioning these episodes (p. 207)".

Socio-economic and Ethnic Background. It would be desirable if there were a classless society and that truly equal opportunity existed for all regardless of ethnic background. Since this ideal is presently not reality, the impact of these conditions must be taken into account, particularly in a correctional setting. Despite a great deal of furor and some sound studies, the situation is far from clear. However, despite the polemics of Shockley (1971), the present state of knowledge with regard to the intelligence of the black American is quite adequately summed up by Pettigrew (1966):

> From this array of data, the overwhelming opinion of modern psychology concludes that the mean differences often observed between Negro and white children are largely the result of environmental, rather than genetic factors. This is not to assert that psychologists deny altogether the possibility of inherited racial differences in intellectual structure. There may be small residual mean differences (p. 131).

An elaboration of this view is expressed by Rohwer (1971) who recognizes the evidence that differences in degree of school success vary with ethnicity, socio-economic status, and I.Q., but feels that an L.Q. (Learning Quotient) would be a more useful concept than I.Q. The latter, according to him, represents a measure of what has been learned and retained from a set period of exposure (chronological age) to a standard set of conditions which obviously are not as constant across subjects as underlying assumptions would demand.

Differences, then, do exist resulting from ethnic, cultural and socio-economic background, whether these differences have some genetic component or are totally the result of environmental factors. And these differences must be recognized in planning an instructional program. The importance of these factors is illustrated in the work of Cameron & Storm (1965) and Freedman (1967). Rohwer & Ammos (1971) demonstrated that corrective action can be taken when the specific deficiencies are subjected to special teaching efforts. They applied elaboration training as mentioned earlier (Rohwer, 1971) as well as providing practice sessions on paired-associate learning tasks to a population of low socio-economic status students and to a population of high socio-economic status

white students of a similar age. Three conditions were applied--training, practice, and control. For white high socio-economic students, both training and practice produced significant improvement. With Negro low socio-economic students practice had little effect, but training had a marked effect, bringing them up to the level of white controls. While these findings strongly suggest what kinds of approaches are better than others for assisting the learning process for Negro children, it could also be argued that since the training approach was effective for both groups that there would be a positive cost/benefit ratio in selecting that approach that would be effective with both groups--in this case training.

Another aspect of ethnic differences and low socio-economic background relates to the student-instructor relationship. Lanning and Many (1966) point out than many students have difficulty in accepting instruction or assistance from a teacher from a quite different background from his. Freedman (1967) found that Negro instructors were able to persuade students in areas of ethnic concern more frequently than Caucasian instructors, despite the fact that the Negro instructors were viewed positively in terms of personality and teaching skill variables. This offers some support for the notion of hiring minority instructors to bridge the communication gap. If, on the other hand, the aim is to increase the effectiveness of the instructors already assigned to basic education programs in correctional settings, then special efforts must be made to assist them in better understanding cultural differences. For many years the effort was to fit one and all into the pattern seen as most appropriate for the dominant culture; no matter what cultural or ethnic background the individual came from, he must adapt to our traditional values. More recently it has come to be recognized that people must be recognized as individuals and their background values respected before the communication necessary for instruction can take place with a higher level of efficiency. Skill training in transcultural communication is being developed (see for example, Triandis & Davis, 1965), and materials are being developed to aid us in understanding and communicating with minority groups (Smith, Hernandez & Allen, 1971).

The Expectation of Failure. Prison educators are often heard saying, "Any gains we make must be viewed as major in that the students who come to us are the failures from the public school system." And in a sense the statement is quite correct; people entering correctional facilities are consistently found to be educationally retarded with a mean tested grade level about two years behind the level of grade last attended in school. When we then consider that portion of the correctional population who require placement in basic education, we must accept the fact that most of the students have suffered innumerable failures, particularly in academic areas. Thus, to the expectation of failure growing from past experience must be added the self-doubts that might be considered normal for an adult entering an educational program. Welford (1951), for example, noted that while learning ability is not markedly decreased by age, many adults, even before the age of 40, lack confidence in their ability to do things outside the familiar or routine. Fay (1966) also noted that many adults tend to underestimate their capabilities, especially for new

learning. All this suggests that the instructor must be working constantly to be supportive and understanding. How such support and understanding is communicated to the student is emphasized by Rossman (1972) who states:

> Educators must learn to hear more than what is being said . . . . They must be sensitive to what is being said and what is not being said. Educators must realize that each student possesses unlimited human potential and is attempting to communicate on a level of human dignity (p. 239).

Respect for dignity of the individual is noted in the comments of Condon (1971) when she suggests that instruction in a correctional setting may involve not responding to or correcting peculiarities of speech as the defeated man is already embarrassed by his confinement and may become completely thwarted if his speech is criticized.

As can be seen, the technique suggested is very much like a therapeutic approach; the influences of Rogers (1951) seems clear. Following along this line, Truax & Carkhoff (1967) identified measurable aspects of therapeutic communication--empathy, positive regard, and congruence--and tested their relationship to other variables in a variety of settings. They found that the learning that takes place within the framework of child rearing is markedly influenced by the variable (Carkhuff & Truax, 1966). More recently an examination of these variables as used by teachers was conducted by Aspy (1969), who found,

> The levels of empathy, unconditional positive regard and congruence provided by teachers . . . relate positively to the cognitive growth of their students . . . positive relationship was found for four sub-tests of the Stanford Achievement Test and the total gain. These relationships were statistically significant at or above the .05 level of confidence (p. 47).

Special Instructional Techniques

The field is replete with instructional gimmicks so no attempt will be made to review them all. Rather a few studies will be introduced to provide an overview of the kinds of things going on in the field. Included here will be studies of efforts to enhance the student's response to the learning experience, studies illustrating techniques to improve motivation, studies of the use of tutors and teacher aides, and an examination of the application of behavior modification techniques to learning tasks.

Special Skill Training. The work of Rohwer & Ammons (1971) in training students in elaborative learning skills has already been cited, but properly belongs under this heading. Amble & Muehl (1966) replicated the work of McDowell (1964), using controlled phrase reading at various levels with over 400 fifth grade children. The technique was tachistoscopic presentation of two, three, and four word groups by film. Pre-

and post-tests were conducted as well as measurement six weeks later. Results indicated that the group with the higher number of phrases presented to them did considerably better than did the middle group or the control. The high presentation group made more than two and one-half years greater gain than the other two groups on reading rate without loss of comprehension on the Iowa Silent Reading Test. The high group made over a one year greater gain on the Directed Reading subtest as well as on Paragraph Comprehension. These findings were consistent for low, average, and superior readers and were maintained for six weeks after training. Training in visual discrimination was found to be of considerable value in preparation for reading instruction (Popp, 1967). Findings from that study were,

> If the specific behavior desired is carefully analyzed, tests can be devised to determine whether that behavior is or is not in a student's repertoire, and training programs can be constructed that will be practicable and effective for those . . . who need them. The program devised was successful . . . . It did not merely raise the group average by helping only some individuals; it was successful for all individuals (p. 25).

General remedial programs apparently also are effective with juvenile offenders for one such application (Gromlay & Nittoli, 1971) resulted in significant gains in vocabulary and speed and accuracy in reading. Tested grade achievement improvement exceeded one year after 24 fifty minute sessions. While the students were juvenile offenders, they approached meeting the standards for being in need of basic education as the mean tested grade level at the beginning of the program was from 4.2 to 4.9 on the various parts of the achievement test. An interesting sidelight was that the reading improvement was not related to I.Q.

Efforts to Improve Motivation. In addition to the basic pedagogic technique of providing feedback information as to progress, there are a couple of articles that suggest approaches to arousing student interest. Sanders (1961) applied careful measurement to evaluate the effect of outside resource persons. His findings suggest solid impact of this procedure in addition to the usual motivators such as enthusiasm of teacher, use of bulletin boards, use of outings and field trips, use of libraries, and improved classroom climate. Much has been said about the fact that it is the individual himself who must do the learning. This is stated in another way by Brunner (1959), "Learning is more rapid and efficient when the learner is a participant rather than simply a spectator (p. 22)." This means that the individual must be quite active in the process. Two studies that suggest methods of increasing involvement are those of Grant (1967) and Wenk (1971). Both of these studies involve the use of the participants in the process of a systematic program of research with an aim of bringing about change and improvement. To date such an approach has not been attempted in the basic education, but is it inconceivable? The students have had a great deal of experience in the educational system, and if a forum is provided for them, they might well be able to help toward better programming. In the process it is possible that they might learn to read and write more proficiently as a by-product rather than the acquisition of these skills being the primary, and often painful, focus.

The Use of Tutors and Teacher Aides. Here again a great deal is heard about individualized instruction for adults (Deep, 1972), but what teacher can come close to providing such service? Not many under the level of funding for most correctional educational programs. If this be true, then it seems reasonable to explore ways to extend the influence through various kinds of assistants. The use of tutors has increased markedly with the advent of anti-poverty programs. How effective are they? Huus (1971) reviewed a number of studies and found the general trend to be positive. One recent study is that of Lane, Pollack & Sher (1972). They used disruptive adolescent boys as tutors for poor reading third and fourth grade boys. Both groups gained; for those tutored there was a fourteen month gain during the eight month program. However, the boys doing the tutoring gained nineteen months in reading level, although no special reading training was provided for them. It seems that this study gives further support for the idea of "involvement" discussed earlier. Do the effects of such intervention efforts last? The results of Shaver & Nuhn (1971) suggest that they do. Tutoring was provided for randomly selected students from fourth, seventh, and tenth grade levels who were not achieving at a level commensurate with their tested intelligence. Tutoring produced significantly greater end-of-year gains for all three grade levels. These gains were sustained two years later for those tutored as seventh and tenth graders. At all three levels a significantly greater number of tutored, as compared to controls, reached their predicted potential. This difference held over the two year follow-up period. Cirsculos (1971) adds a word of caution about the use of tutors. If they are to be effective, they must be trained and their efforts must be coordinated with the work of the classroom teacher. He suggests periodic joint sessions with the teacher, the tutor, and the school psychologist.

The use of teacher aides has become commonplace in many schools. Surprisingly, this practice has been subjected to careful evaluation at least in one setting (Morse, 1960). Findings were that teachers with aides gained a great many advantages including being able to devote 27 percent more time to providing more individual help to each pupil. When the efforts of the aide were added in, it was found that each pupil received ninety percent more individual help than previously. Not a great deal along this line has been done systematically in prison, but it would appear that this could be a developing program. Volunteers are available from both outside and inside (Condon, 1971) who might be trained to assist in the academic setting, especially in the basic education area.

Review of Behavior Modification Techniques. The basic experimental work of Skinner (1938) has flourished in application in a variety of ways--teaching machines, token economies, and other kinds of contingency games. The recent work of Bandura (1969) brings many of the efforts into focus. Measures of effectiveness have been encouraging in almost all studies reported. Two applications in the school setting are cited as illustrative. The first is that of Benowitz & Busse (1970) who found material incentives to be effective in improving spelling scores. The second is that of Willis, Morris & Crowder (1972) who used tokens that could be traded for prizes and recorded a mean reading gain of 1.2 years after 75 days of treatment. A unique feature of this study was the use

of slightly older students (eighth graders tutored fourth graders) as "behavioral engineers" to administer the dispensing of tokens.

Probably the most comprehensive application of the token economy approach was that of the CASE I and II studies (Cohen, Filipczak & Bis, 1966, 1967). A complex system of earning of tokens for application and achievement, coupled with an elaborate program of payment for services such as the opportunity for free time. The results, again, suggested positive outcome. Thus there is some support for the application of this technique with a population of delinquents. Will such techniques work with adults? A recent study by Heitzman & Putnam (1972) demonstrated some gains by the use of token reinforcement with adult basic education students. Based on prior studies, an expectation of 1.0 years' growth in basic skills for twenty instructional sessions was set with a target of 80 percent of the group achieving the expectation. Results fell somewhat short of expectation; 71 percent met expectation in arithmetic skills and 65 percent in reading skills. One of their conclusions, however, is well worth passing on:

> Use of token reinforcement should be planned and executed with the guidance of personnel well-grounded in behavioral analysis orientation. The apparent simplicity of a token reinforcement system is deceptive (p. 334).

As a side light it might be well to emphasize that behavior modification depends on providing positive reinforcers (rewards) for desired behavior with an ignoring of non-compliance. This is often quite difficult for teachers, correctional workers, and others trained in the traditional reward/punishment approach to motivation. However, the importance of positive reinforcement increases when one works with a population made up of a large number of individuals with sociopathic tendencies. While sociopaths appear to have the capacity for normal emotional arousal (Bennett, 1968), they do not respond to punishment in the same way that most of us do (Hare, 1965). However, they do respond well to positive reinforcement, even such secondary reinforcers as verbal comments of, "Good" (Kadlub, 1956).

A Brief Review of Research Findings

It would appear that there are suggestive findings in a number of areas that can assist in designing a program of basic education for adults in a correctional setting. Older people can learn although it may take them a little longer. Differing cultural, ethnic, and socio-economic backgrounds may interfere with learning but these can be dealt with. There are quite specific skill training techniques that can be applied to enhance potential for learning. There are known ways to motivate older students whether or not they are inmates. Positive reinforcement appears to assist in the teaching process.

Other reviews have been made. That of Brunner (1959) deals with research in the broad area of adult education. His observations appear to be particularly cogent to our discussion:

1. Principles of good pedagogy apply to adults as well as to school children.

2. Learning is more rapid and efficient when the learner is a participant rather than simply a spectator.

3. When a visible and tangible product appears as a result of a learner's activity, interest is greater and the learning will be longer continued. There is a high interest value in knowledge of the result of learning.

4. Group learning is better, i.e., more effective, than individual learning.

5. The greater the number of sensory channels used in the learning process, the greater the actual amount of learning.

6. Learning must be used to be retained (p. 22).

More recently Smith (1971) has drawn upon the success of adult basic education programs to modify regular classroom instruction. To do so he had to evaluate the elements of good and bad programs. He noted,

> Adult Basic Education programs that fail tend to be: testbook oriented, time block centered, formal, future oriented, group centered, and negative behavioral modification oriented. Adult Basic Education programs that succeed tend to use the learning laboratory concept, . . . itilize flexible time blocks, are informal, attempt to capitalize on students' perceived needs, utilize different approaches for different students, and utilize positive behavioral modification techniques to build feeling of self-worth.

There is little that needs to be added to these two summaries; the knowledge is there to build upon.

The Use of Research Methodology

Now that the research findings from a variety of associated fields have been accumulated, they can now be applied. To what extent do they really improve things? It is at this point where the application of the scientific tool of research comes into play.

Many people at the classroom level may feel that research is for the researcher, not for them. However, research comes in different levels and everyone should be involved at some level. The small book by Rusk (1961) is highly recommended. It provides considerable insight into the nature of measurement and gives practical guidance in how to prepare for a study.

Some principles can be presented here, however, to get people to start thinking about research. First, someone has to formulate what kind of accomplishment is desired. A goal or objective has to be established.

This has to be examined to see if objective measurement can be applied. The formulation of such goals as "rehabilitating inmates through education" may throw people into a quandary. How do we know if a man is rehabilitated? Is there any evidence that education plays a part in bringing about rehabilitation? It seems likely that program improvement can come about much more quickly if we set our goals a little closer to the action we are going to take. If the goal becomes "The education program will advance eighty percent of a class of 42 students 1.8 grade levels during a nine month school year", it can be seen that at the end of some time period it can be determined to what extent these goals have been achieved. As can be seen, the setting of goals and objectives is one of the basic elements in planning research and evaluation. Once this step has been completed the methods for evaluation can be discussed.

Comparison Methods.

The inclination of many is to institute a new approach and, from observation and "feel", decide that things are "better". But the question always arises, "Better than what?" We need to compare the present procedures with something to learn if it is indeed better. The stage is now set for a variety of approaches to the comparison problem.

Matched Samples. One ideal is to find a group of students quite similar to the students in the class in which the program change is contemplated. Then out of that similar group, the best comparison would result if the individuals selected were matched individuals in the study sample. The match would involve such items as age, ethnic background, intelligence, etc. As can be seen, the pool needed from which to draw the match sample would have to be huge. The resulting match usually falls far short of the ideal.

Random Control Groups. Where possible, sometimes students can be assigned randomly to groups, some of which will receive the experimental procedure and others which will not. This method is based on the assumption that the random assignment will result in the groups to be compared containing a balance according to crucial variables that might be involved, such as age, intelligence, etc. Unfortunately this has to be carefully checked because every once in a while, on a chance basis, either the treatment or the control group will accidentally be made up of all exceptionally talented individuals.

There are many situations where random assignments are not possible. What can be done then?

Before and After Measures. When faced with the restrictions of reality, one alternative is to at least measure at the beginning of a study and again at some later time to see if anything has changed. While such procedures, in and of themselves, can lead to erroneous conclusions,

in education there are base line data available. A certain level of advancement is expected for specified periods of time. Without this information, it would not be possible to tell if learning had taken place or only maturation.

Classification of Subjects

The foregoing develops an approach to the measurement of change but it rests on the assumption that all students are identical. Or, to bring it to the topic of concern, the assumption is made that all adult inmates are identical. In education, as in most correctional programs, a great deal of time is spent trying to find a technique that will work for everybody. It is important that findings are reevaluated to see, not whether some educational program is effective, but effective for whom and to what degree.

A concrete example might help this point emerge more clearly. Suppose the intent is to speed up the learning process in reading by using film presentation of a series of words. Before and after testing fails to reveal any great difference in terms of mean scores. Now this data might be reprocessed in terms of ethnic background and intelligence levels. It might be found that all individuals at the high intelligence levels made some gains. Perhaps the Chicano became bored with the presentation because his bilingualism interfered with his responding to English words. The black students in the group might also have scored low because they viewed the presentation as entertainment and failed to concentrate on the task at hand. Does that mean that the program is without value? Not at all, it may be of considerable value to a subgroup who can respond well to this kind of presentation. It does mean though that if other subgroups are to be reached, new programs will have to be developed.

Some General Research Considerations

Great care should be taken in planning the research effort (Rusk, 1961) because considerable time can be devoted to the collection of data that cannot be used because a basic element was not considered in the early stages.

Part of this planning is to insure that plans can be carried out in the particular setting. Again, findings are of little value if the study has to be abandoned half-way through because the procedure interferes with some other process or goes against established policy.

With regard to the statistical treatment of the data, it might be well to ask for assistance in this area unless the teacher in charge of the project feels he has the skills necessary to take on the job.

Another point worth remembering is that not all evaluations need to be in tight mathematical terms. It may be that there are qualitative

aspects of chance that are highly important. In such cases, it would be well to move the level of measurement to the point where counts and percentages might tell the story.

Summary and Conclusions

The research findings on problem areas relevant to adult basic education in corrections were reviewed in terms of potential application. It was noted that there is no coherent body of knowledge relating directly to the subject under discussion. Only in the area of adult basic education is there the beginning of a systematic assemblage of findings that have been tested by repeated application. Thus the search for relevant findings must continue to be wide ranging--making use of information from elementary education, from general learning theory, from psychology including clinical psychology, from adult education and from such diverse areas as management training and political sociology.

The accumulation of research results brought to light well-known learning principles that need to be kept in mind in planning new programs but also revealed a number of innovative ideas and applications that could be considered for trial in the correctional setting. Some heretofore unrecognized problems were delineated and an attempt was made to locate research results that would suggest a direction for developing a solution to the problem.

In addition, research was viewed as a tool for self-correcting action. As new ideas and approaches are tried out in the classroom a systematic approach can be taken to determine the effectiveness as compared to previous methods or alternate approaches. The need to plan research before the start of data collection was emphasized. A part of that planning effort was seen as the development of clearly stated objectives that can be measured. The various ways that a comparison base could be identified were discussed. The importance of a comparison group was stressed because without such a safeguard, the involvement of the instructor may cause him to "read in" positive results when only a chance variation is in evidence. With some reasonable safeguards and some assistance with statistical analysis, it is felt that most classroom instructors can and should be carrying out research projects.

Given the strenuousness of the work facing the educator in this area, is the whole thing worth the effort? Certainly there is ample room for improvement if we accept the rather pessimistic view of Bruner (1972) that, "Literacy programs for adults with over five percent success are a rarity (p. 329)". Recent findings seem to be somewhat more hopeful and there is ample support for the concept that if a successful program can be developed, it will have considerable social value. The statement from the article by Levin, Guthrie, Kleindorfer & Stout (1971) dealing with the effect of schooling on earnings, economic opportunity, sums it up quite well:

Virtually all studies on the subject show evidence of a significant effect. There are few social science hypotheses that have been tested so intensively with such consistent results (p. 8).

References

Amble, B. R., & Muehl, S. Phrase reading training and reading achievement: A replication study. Journal of Experimental Education, 1966, 35 (2), 93-99.

Aspy, D. N. The effect of teacher-offered conditions of empathy, positive regard, and congruence upon student achievement. Florida Journal of Education Research, 1969, 11, 39-48.

Bandura, A. Principles of Behavior Modification. New York: Holt, Rinehart & Winston, 1969.

Bennett, L. A. Sociopathy and stress. Unpublished doctoral dissertation, Claremont Graduate School, 1968.

Benowitz, M. & Busse, T. Material incentives and the learning of spelling words in a typical school situation. Journal of Educational Psychology, 1970, 61, 24-27.

Bruner, J. S. Preconvention spotlight. Journal of Reading, 1972, 15, 328-329.

Brunner, E. An overview of adult education research. Chicago: Adult Education Association of USA, 1959.

Cameron, A., & Storm, T. Achievement motivation in Canadian Indians, middle- and working-class children. Psychological Reports, 1965, 16, 459-463.

Carkhuff, R. R., & Truax, C. B. Toward explaining success or failure in interpersonal learning experiences. Personnel and Guidance Journal, 1966, 44, 723-728.

Cirsculos, N. P. Training tutors effectively. The Reading Teacher, 1971, 25, 157-159.

Cohen, H. L., Filipczak, J. A., & Bis, J. S. Contingencies applicable in special education of delinquents: Establishing 24-hour control in an experimental cottage. Silver Spring, Maryland: Institute for Behavioral Research, 1967.

Condon, M. The volunteer and academic education for rehabilitation of prisoners. Adult Leadership, 1971, 20, 48-50.

Deep, D. Individualized learning for adults in the ILA Project. Adult Leadership, 1972, 20, 291.

Diller, L. A comparison of the test performance of delinquent and non-delinquent girls. Journal of Genetic Psychology, 1952, 81, 167-183.

Ebbinghaus, H. Uber das Gedachtus. Unterserchungen zur experimentellen Psychologie. Leipzig: Dunker & Humblot, 1885.

Emrich R. M. Proceedings, criminal justice research conference, San Francisco, March 15-17, 1972. Sacramento: California Council on Criminal Justice, 1972.

Fay, J. B Psychological characteristics affecting adult learning. In F. W. Lanning & W. A. Many (Eds.), Basic education for the disadvantaged adult. Boston: Houghton Mifflin, 1966.

Freedman, P. J. Race as a factor in persuasion. Journal of Experimental Education, 1967, 35 (3), 48-51.

Glueck, S., & Glueck, E. Delinquents in the making. New York: Harper & Bros., 1952.

Gormlay, J., & Nittoli, M. J. Rapid improvement of reading skill in juvenile delinquents. Journal of Experimental Education, 1971, 40, 45-48.

Grant, J. D. The new careers development program: Final report. Washington: U. S. Department of Health, Education, and Welfare, 1967.

Guilford, J. P. Laboratory studies in psychology. New York: Holt, Rinehart, and Winston, 1934.

Hare, R. D. Acquisition and generalization of a conditioned-fear response in psychopathic and nonpsychopathic criminals. Journal of Psychology, 1965, 59, 367-370.

Heitzman, A. J., & Putnam, M. J. Token reinforcement and adult basic education. Journal of Reading, 1972, 16, 330-334.

Huus, H. Right to read, IRA and what you can do. The Reading Teacher, 1971, 25, 112-156.

Jensen, A. R. How much can we boost I.Q. and scholastic achievement? Harvard Educational Review, 1969, 39, 1-123.

Kadlub, K. T. The effects of two types of reinforcement on the performance of psychopathic and normal criminals. Unpublished doctoral dissertation, University of Illinois, 1956.

Lane, P., Pollock, C., & Sher, N. Remotivation of disruptive adolescents. Journal of Reading, 1972, 15, 351-354.

Lanning, F. W., & Many, W. A. Basic education for the disadvantaged adult. Boston: Houghton Mifflin, 1966.

Levi, J. A psychometric pattern of the adolescent psychopath's personality. Unpublished doctoral dissertation, New York University, 1943.

Levin, H. M., Guthrie, J. W., Kleindorfer, G. D., & Stout, R. T. School achievement and post-school success: A review. Review of Educational Research, 1971, 41, 1-16.

Lorge, I. Thorndike's contribution to the psychology of learning of adults. In F. W. Lanning & W. A. Many (Eds.), Basic education for the disadvantaged adult. Boston: Houghton Mifflin, 1966.

McDowell, N. A. The effectiveness of the controlled reader in developing reading rate, comprehension and vocabulary as opposed to the regular method of teaching reading. Journal of Experimental Education, 1964, 32 (4), 363-367.

McGeoch, J. A. The influence of associative value upon the difficulty of nonsense-syllable lists. Journal of Genetic Psychology, 1930, 37, 421-426.

Morse, A. D. Schools of tomorrow--today. Garden City, New York: Doubleday, 1960.

Pettigrew, T. F. Negro American intelligence: A new look at an old controversy. In F. W. Lanning & W. A. Many (Eds.), Basic education for the disadvantaged adult. Boston: Houghton Mifflin, 1966.

Popp, H. R. The measurement and training of visual discrimination. Journal of Experimental Education, 1967, 35, 3; 15-26.

Postman, L. The history and present status of the law of effect. Psychological Bulletin, 1947, 44, 489-563.

Rogers, C. P. Client centered therapy. New York: Houghton Mifflin, 1951.

Rohwer, W. D. Learning, race and school success. Review of Educational Research, 1971, 41, 191-210.

Rohwer, W. D., & Ammons, M. S. Elaboration training and paired-associate learning efficiency in children. Journal of Educational Psychology, 1971, 62, 87-96.

Rossman, M. H. The communications gap in adult basic education. Adult Leadership, 1972, 20, 239-257.

Rusk, R. R. An outline of experimental education. London & New York: MacMillan, 1961.

Rutter, M., Yule, W., Trizard, J., & Graham, P. Severe reading retardation: Its relationship to maladjustment, epilepsy, and neurological disorder. Proceedings of the First International Congress of the Association from Speech Education, 1966, 1, 25-28.

Sanders, D. C. Building enthusiasm for learning in Casis-Dill elementary schools. Austin, Texas: University of Texas, 1961.

Schulman, I. The dynamics of certain reactions of delinquents to group therapy. International Journal of Group Therapy, 1952, 4, 34-43.

Sepede, J. H. Individualizing ABE programs through learning packets. Adult Leadership, 1972, 20, 289-290.

Shaver, J. P., & Nuhn, D. The effectiveness of tutoring underachievers in reading and writing. Journal of Educational Research, 1971, 65, 105-112.

Shockley, W. Negro I.Q. deficit: Failure of a malicious coincidence model warrants new research proposals. Review of Educational Research, 1971, 41, 227-248.

Silberberg, N. E., & Silverberg, M. C. School achievement and delinquency. Review of Education Research, 1971, 41, 17-34.

Skinner, B. F. The behavior of organisms. New York: Appleton-Century, 1938.

Skinner, B. F. Walden two. New York: The Macmillan Co., 1962.

Smith, A. L. Hernandez, P., & Allen, A. How to talk with people of other races, ethnic groups, and cultures. (Monograph #1.) Los Angeles: Trans-Ethnic Education/Communication Foundation, 1971.

Smith, E. H. Adult basic education: Some spin-off for culturally deprived youth education. Adult Leadership, 1971, 19, 269-275.

Thorndike, E. L. The law of effect. American Journal of Psychology, 1927, 39, 212-222.

Triandis, H. C. & Davis, E. E. Some methodological problems concerning research on negotiation between monolinquists. In Group Effectiveness Research Laboratory. Ann Arbor: University of Michigan, 1965.

Truax, C. B., & Carkhuff, R. R. Toward effective counseling and psychotherapy. Chicago: Aldine, 1967.

Wechsler, D. The measurement and appraisal of adult intelligence. Baltimore: Waverly Press, 1958.

Welford, A. T. Skill & age: An experimental approach. London & New York: Oxford University Press, 1951.

Wenk, E. A. Schools and youth unrest. Davis, California: Research Center, National Council on Crime and Delinquency, 1971.

Willis, J. W., Morris, B., & Crowder, J. A remedial reading technique for the disabled reader that employs students as behavioral engineers. Psychology in the Schools, 1972, 9, 67-70.

THE IMPACT OF INSTITUTIONAL INVOLVEMENT

Cynthia W. Houchin
Arkansas Department of Correction
Little Rock, Arkansas

Problems and Goals of Treating Offenders

To consider the impact of institutional involvement in treating public offenders, we must first consider the problems and goals. Typically, inmates have experienced significantly more failure than success in their endeavors, and as a result have learned to get attention and peer group approval through misbehavior and, eventually, anti-social acts. Their need to achieve has been effectively eliminated by their repeated failures. It would be difficult to find in any other group of people more individuals who have been thwarted in their development. The inmate have developed a deep anti-social resistance which becomes intensified in early adulthood.

Offenders usually lack vocational skills. The President's Task Force Report: Corrections (1967) indicates a higher proportion of unskilled laborers among inmates than among the civilian work force. The Report also indicates that 14.4% of the inmate population in the United States is functionally illiterate, and over half of them lack a high school education.

We have learned that failure has a tremendous effect upon the learning process. As children in the public school system, under stressful situations, potential offenders may have failed in tasks which they could have easily accomplished under other circumstances. After failure under these conditions occurs a few times, they begin to look at conflicts as difficulties to avoid, not problems to be solved. Often they will refuse to even try any new task if there is a remote possibility of suffering humiliating failure. The feelings of guilt, insecurity and tension resulting from this conflict leads to a general state of anxiety and rigidity which is very harmful to the learning process. Their academic achievements are often far below what their intelligence test scores indicate they are capable of attaining, and even the scores are often deflated by their hostility and insecurity in test taking.

In addition, many inmates have failed in relationships with family, friends, employer, and fellow employees; they may suffer from personality shortcomings; and they may be in need of corrective medical attention. This pattern of cumulative failure has prevented many from developing a sense of self-respect, thus creating another obstacle to rehabilitation.

The task of corrections is to take these people who have failed and develop in them adequate internal social and behavioral controls which will enable them to react to life situations in appropriate and adaptive

ways, educate them to a level commensurate with their academic potential, and train each one in a vocational skill to a level commensurate with meaningful participation in the world of work. The task includes integrating or reintegrating offenders into community life in the hope that they may thereby live more competently, honestly, satisfying, and cooperatively as members of our society.

To further complicate the task, this relearning process must take place in a prison which itself militates against therapy. Prisons have been called cement parks with barbed-wire shrubbery, human warehouses, and graduate schools for crime. Mass handling, countless ways of humiliating inmates in order to make them subservient to rules and orders, special rules of behavior designed to maintain social distance between officers and inmates, frisking of inmates, regimented movement to work, eat and play, drab prison clothing--all tend to depersonalize inmates and reinforce their belief that authority is to be opposed, not cooperated with. The inmate social system encourages negativism in attitudes toward officials, including teachers. Prison-wise inmates tend to suspect therapists of seeking to manipulate others for selfish motives. Inmates often develop unwarranted suspicions of cell-mates, the officers, the warden or deputy, the chaplain, or anyone. They live a life of utter frustration and pent-up hostility. If an inmate had any spirit when he entered the prison, it is often completely broken after months of the deadening prison routine and pressure of the inmate culture. The phrase "do your own time" is a slogan which expresses alienation and indifference to the interest of both staff and other inmates. Such an atmosphere is, of course, antithetical to successful reintegration.

But not all is lost, for actually there can be advantages in undertaking the relearning process in prison. A period of institutionalization can in some cases help an offender by removing him from the pressures and undesirable influences of his outside life, and by giving him intensive treatment. Furthermore, relearning can be facilitated by the prison system since the institution is capable of controlling the environment and limiting behavioral choice. The institution, therefore, controls the contingencies necessary to encourage appropriate behavioral choice.

These advantages of prisons in a relearning process can be realized only through total institutional involvement, sometimes also referred to as "collaborative institutional treatment," but for simplicity will be referred to as "team approach." The team approach is a <u>total</u> situation which induces reconstructive processes. In correctional institutions this includes diagnosis, classification, custody, discipline, industry, education, vocational training, counseling, medicine, and recreation; <u>all</u> institutional services. To accept the separation of treatment and custody as inevitable is fallacious because custody (care and control) is a basic part of treatment; and the basic principles of treatment (relationship, honesty, and limited setting) are essential to enlightened custody. In varying degrees, all staff members are custodians and therapists.

There is now evolving a philosophy which recognizes the value of all these services, provided they are allowed to function in a proper relationship with each other. The team approach has been standard operating procedure in guidance clinics and mental hospitals for years. The time has come in corrections when the same broad, integrated program of total treatment will be considered essential in every institution in the country.

Impact of Institutional Involvement

Diagnosis

Diagnostic services provide an opportunity for extended testing and screening to secure data to be used in choosing the best correctional program for offenders. Through interviews, observation and testing they can explore the past behavior and present attitude, educational level, extent of vocational skills and aptitudes, family and social background, and other factors relevant to development of a plan of treatment based on the individual's capacities, needs, and interests.

To avoid a waste of time and effort in planning a program for an individual without a thorough knowledge of his needs, the full report of the diagnostic service must be forwarded to the classification team at the institution responsible for guiding the individual's future development.

Classification

Unfortunately, there is usually a single classification committee for an entire institution, dominated by senior custodial personnel and chiefly concerned with work and security assignments. Counselors present to the committee information about the inmate, and make recommendations for his educational, vocational training and work assignments. Rarely is the inmate involved in the determination of his program, and therefore he lacks commitment to it. Further, the inmate knows that the counselor can recommend a program to the classification committee and has little influence on the committee.

In the team approach, an inmate is assigned to one of many classification committees for the duration of his institutionalization. Each classification committee is composed of a teacher, counselor, vocational instructor, custodial officer, unit supervisor, and if applicable, an industry supervisor. With this approach to classification, many objectives are accomplished. One, the inmate is able to establish rapport with the committee members and become involved in the development of his own program. Second, the inmate now gets the concerted attention of a team rather than the conflicting ministrations and rivalries which would otherwise confront him and only confirm his cynicism. Third, the classification team can minimize the detrimental effects of the incarceration period by reducing anxiety and apprehension, and be setting up meaningful

and appropriate expectancies. The inmate's problems and progresses, his strengths and weaknesses can be openly discussed, allowing the inmate to know where he stands, what is expected of him, and what he can expect of himself. Fourth, the representatives from the various services who are in contact with the inmate on a day-to-day basis have the opportunity to better understand the inmate's problems and therefore more accurately measure his progress in each area. Fifth, this team approach establishes communication between the various services enabling them to better correlate their efforts.

Medical Services

Inmates frequently are in need of dental care and have a variety of physical problems which have been long neglected. A physical examination is, of course, also prerequisite to classification decisions, and such examinations often reveal defects requiring corrective treatment. Additionally, research has shown that a reduction of recidivism is associated, not only with medical services for the standard type of handicap, but also in cases requiring plastic surgery to correct defects of appearance. It is suggested here that rather than postponing, until the approach of a parole date, plans for corrective and/or plastic surgery, this treatment should be accorded the inmate upon his admission to the institution. When such physical defects occur, emotional scars also inevitably develop which must be treated before we can expect satisfactory adjustment in the inmate's attitudes and self-concept.

Counseling Services

The need for counseling services in a correctional institution have long been recognized, but counseling staffs have been severely limited. The team approach in an institution will call for a heavier emphasis on the counseling services.

The counselors can assist the inmate to use his period of institutionalization as an incentive rather than detriment by helping him develop insight and self-direction. Counselors can become integral parts of the educational and vocational training programs. Achieving an education or vocational skill will be essentially meaningless to the inmate without concomitant behavioral change.

Counselors should be responsible for the orientation course, the purpose of which is to pass on, as effectively as possible, specific information intended to acquaint the newly-arrived inmates with the institution environment, inform them of their responsibilities in the institution and opportunities available to them. Near the end of the inmate's time in the institution, the counselors will schedule a similar course directed toward preparing him for transfer to a pre-release unit and eventual return to the community.

Education

The importance of basic education programs in a correctional institution cannot be overemphasized. We have only to look again at the statistics on illiteracy and lack of basic education among inmates to realize that the educational program provides the first step to rehabilitation for most offenders. Without at least a basic education, an individual cannot successfully compete in employment, nor cope with the everyday problems of living in our complex society. The acquisition of knowledge, skills and attitudes in the classroom are fundamental to an improvement in the inmate's self-image and social adjustment.

In the team approach, with its emphasis on individualization of treatment, the education program is most adaptable. Upon receipt of the diagnostic report, the correctional educator can develop a learning program tailored to meet the deficiencies of the particular student in line with his interests, abilities, and present level of achievement.

The greatest coordination is required between the educational program and vocational training program. First, the educator must determine whether the inmate has the ability to achieve whatever educational level is necessary to function in a chosen vocation, and whether he will be able to attain that achievement level during his institutionalization. The academic program can then be keyed most effectively to the vocational interest of the inmate.

Educators must also be cognizant of the level of achievement which can reasonably be expected of an inmate during his institutionalization, and then guard against inspiring the inmate with unrealistic aspirations upon his return to society. For a short-term offender, alternative institutional programs might provide more useful preparation for post-release life.

Parenthetically, health studies should be included as part of the education program. All too often health studies are left to the medical services or to the pre-release program, where limited time and staff preclude giving the subject the attention that it needs. Health studies can most effectively be undertaken in the classroom setting and should become a part of the established curriculum.

Social education in the broadest sense must include all of those institutional activities which help an inmate to solve his personality and social adjustment problems. But the educational division bears the greater responsibility for organized courses in human relations, citizenship education, social studies, morals and ethics, and mores and customs which are aimed at improving the inmate's ability to live with himself, to see things as they really are, to accept other individuals with understanding, and to cope with ordinary day-by-day social situations.

The education program must be based on individualized instruction if it is to be an effectively contributing part of the team approach, and not just another phase of the mass treatment process which we are

trying to eliminate from our institutions. It is inconsistent with sound educational practices to set up a scheme of education which treats all inmates as being essentially the same educational material. The educational program should be as carefully worked out as the diagnosis and prescription for medical treatment.

The effectiveness of individualized treatment in the correctional education program will be greatly reduced if the same philosophy is not supported by the entire institution, and most particularly by the vocational training division and counseling services. Without total support from all other services, the education program can become a matter of inculcating in pupils values which either have no relevance to the instant society or which actually impede the achievement of goals in the instant society. For example, what if the prison environment outside the classroom conveys the message that the inmates are incorrigible enemies and that the central purpose of the prison is to punish inmates as worthless and evil people? Then education's goals are inconsistent with the central thrust of the prison as a social situation, and the program becomes a water-tight compartment wherein it plays a meaningless game without relevance to the total experience of the inmate. Similarly, imagine the frustration of both the teacher and the inmate if the inmate is suddenly transferred to another institution after having begun a carefully designed educational program. The importance of total institutional involvement is most necessary in its support of the correctional education program.

Vocational Training

Vocational training programs run the risk of being designed merely to train inmates in skills that are required in the prison's industries and various work assignments. Properly designed, vocational training probably increases the mathematical chances in favor of a successful post-release life more surely than any other type of education, provided, however, the academic educational program has been closely correlated with it. This is especially true among the younger inmates.

Candidates for vocational training should be carefully selected by the classification team on the basis of whether the inmate has the aptitude and ability to learn the skill, and whether he will be able to accomplish the related basic education. Vocational competence without behavioral control and academic competence tends to "lock in" the student in a life situation in which his options are severely limited.

The vocational trainee must be counseled to insure that he has realistic aspirations in his trade. Interviews with inmates frequently indicate expectations of rapid advancement following their release. Subsequent failure to realize these advancements may contribute to recidivism.

Wherever possible, the vocational trainee should acquire not only usable skills, but that pride in high-grade performance which enables

him to "get a kick" out of doing a job well. Hopefully, he will be trained to the point where he gains more satisfaction from the performance of legitimate work than from his former criminal activities.

The vocational training programs must also be prepared to meet the needs of those inmates who do not have the ability for skilled training. Even as porters, janitors, maintenance men, handymen, they can be trained to do a better job.

The vocational training program assists the team approach by its guidance and assistance of the inmate in his goal to earn a living as a productive member of society in a type of work for which he is fitted and interested. The most important element in the vocational training program is the instructor himself. The influence of a strong, sound instructor upon his trainees will be of more lasting importance than the skills and knowledge which he imparts. It is through the influence of such staff members that the most desirable changes in attitude occur, and that social education becomes a reality.

Of all aspects of institutional programs, vocational training should be most closely coordinated with the parole release date. It would be equally frustrating for the inmate and instructor, if the inmate were paroled (or transferred to another unit) prior to completion of his training, or if the inmate remained in the institution for many years without an opportunity to utilize the skills he had acquired.

Prison Industry

The present emphasis on prison industry is mainly production output and profit. In the total institutional involvement, the prison industries can ideally provide a "graduate level" of the vocational training programs. Where desirable, the classification team can afford the vocational trainee actual experience on a job closely related to his training. Many inmates have a history of sporadic employment, and the experience of adjusting to an eight-hour day, five-day week job is itself a successful accomplishment for them.

Correctional industries are capable of being operated in a manner comparable to that of private employment. Instead of allowing the inmate to remain at a pace of turning out 250 pieces a day, the industry supervisor can assist the inmate in learning how to turn out 1,000 pieces a day, as would be expected of him in private industry. Well-trained and understanding industry supervisors will enhance the inmate's attitude toward employment and his ability to succeed in the community, thus contributing to the overall treatment program of the institution.

Recreation

It has long been recognized that the unwise expenditure of leisure time is a major contributing factor to delinquency and crime. Many

crimes are the result of a wish for excitement and new experience. The wish is legitimate, but the path taken ends in crime. A great many inmates are totally unprepared in their attitudes, habits, and skills to enjoy wholesome recreational activities. Under the guidance of a well-rounded recreational program, an inmate is provided the opportunity to discover his latent abilities and pursue satisfying activities as a means of helping him toward social adjustment. When the inmate goes into the yard, it will not be to mill around aimlessly, but to engage in one of a dozen interesting and athletic activities. In the evening, he may go to an illustrated lecture, read a book which a trained librarian has helped him to select, or to a workroom where he can have a bench and tools with which to work at home at some hobby.

Sound recreational programs also contribute to the orderliness of the institution. Administrators realize that recreation provides an opportunity for inmates to "blow off steam" in a desirable way, and thereby avoid disciplinary problems.

Discipline

Under conditions of mass treatment and great concern for custody, there is a tendency to accumulate numerous restrictions on inmate behavior. Each disturbance inspires an attempt to prevent its recurrence by establishing a new rule. Once established, rules have great success at survival because rarely is there any systematic review that looks to the elimination of unnecessary restrictions. Many prisons have evolved into places of extreme regimentation through the accumulation of permanent rules passed in reaction to sporadic episodes. They go through periods of tense competition, with staff oriented primarily to enforcing rules, and inmates to evading them. What is most striking is that these efforts do not clearly decrease the amount of disorderly or dangerous behavior.

When the staff treat inmates as if they were dangerous, they become dangerous, although not so much to staff as to other inmates. If alienated from staff, they fall more than ever under the threat of domination by other inmates whose claims to authority they resist by counter-hostility. Therefore, a first principle for any correctional institution is that staff control can be the greatest, and certainly inmate life will be most relevant to that in the free community, if rules regulating behavior are as close as possible to those which would be essential for law and order in any free community, together with such minimal additional rules as are essential to meet the conditions peculiar to the institution.

Total institutional involvement approaches discipline with several considerations in mind. The disciplinary process is viewed as one that should contribute to the inmate's general understanding of the nature of rules and the need for abiding by them. The duration and type of punishment varies within limits according to the inmate's situation and response.

There is evidence that treatment is directly related to reduction of prison rule violations. Therefore, it is most important that when confined for misbehavior, the inmate still should be contacted by members of the treatment staff who can discuss with him the causes and consequences of his misbehavior, and attempt to reach an agreement on what the causes are and how they may be corrected. Disciplinary committees should also be composed of representatives from all institutional services as is the classification committee. More important, a member of the offending inmate's classification committee should participate on the disciplinary committee.

Custody

Unfortunately, in many prisons staff are discouraged from calling inmates "mister" - they must address inmates only by first name, last name, or nickname. But inmates are required to address staff members as "mister," "officer," or some other title, together with their surname. Staff are not to fraternize with inmates. They must deal with them in an authoritative and impersonal manner, while inmates may not act familiar with staff. Although rules on staff nonfraternization with inmates are designed to reduce the prospects of corruption of staff, instead they simply augment the corruption of inmates. If differences of opinion occur, particularly as to how the inmate behaved, the staff version is always to be regarded as correct.

In the team approach, the custodial officers have a great potential advantage for counseling inmates because they are often closer to the inmate in background and outlook than the counselor, and because they work in closer contact with the inmates. This advantage is utilized by giving custodial staff training and explicit responsibility in treatment areas and by promoting closer contact and cooperation between them and treatment staff.

The involvement of inmates in important treatment functions is another important element of the team approach. Group counseling sessions, particularly, have become settings in which inmates can help each other, often through hard and insistent demands for honesty in self-examination, demands that cannot be provided with equal force and validity by staff who have not as individuals shared experience in the manipulative world of criminal activity.

Group counseling is a prime example of a technique used to promote communication. Every institutional employee is invited to meet regularly with a group of inmates on a daily to weekly basis for one or more hours of discussion on matters of inmate concern. A few counseling specialists provide training and consultation for the other staff personnel, but the latter actually conduct the counseling.

There seems to be general agreement that group counseling has been successful in reducing tensions among inmates and between inmates and staff. Inmates express their feelings in the counseling session with

impressive frankness, and early exposure of their complaints often permits problems to be resolved before they become serious. The experience also demonstrates to many inmates that staff members are more tolerant and reasonable than they might have appeared to be. For both inmates and staff groups, this process tends to break down the stereotype that each holds of the others, and provides a vital impact of total institutional involvement.

Research

The role of research demands a close integration of planning, action, and evaluation. Broadly characterized, research can provide basic information about offenders, such as number, rates, trends, and individual characteristics. Researchers can contribute information on research findings and theoretical developments that have implications for correctional program development, and thus help assure that program formulations are in accord with the strongest evidence and best theorizing. And researchers can participate in planning programs to help frame hypotheses for the testing of program claims and devise experimental designs to test them. Researchers must cooperate too in program operation to observe and record implementation and insure that results are substantiated.

Motivation

An area in which the team approach provides probably the greatest impact is motivation of the offender. To develop motivation has been more difficult in prison than in the free community, difficult both for the treatment staff and for the inmate, who is frequently well disillusioned with life.

In the team approach we can look at institutionalization as a learning process in which the individual enters the initial situation under complete external controls. As he makes positive choices, and as such, demonstrates his acquisition of internalized behavioral controls, he is allowed more and more behavioral choice alternatives, until he reaches the point where his behavior is largely under his own internal control. This means the staff will procure conformity to desired behavior more effectively by making conformity gratifying to the inmate than it will be imposing penalties for nonconformity.

It has been well established that positive reinforcement is far more effective in learning situations than is punishment. Yet, in many cases, the only positive reinforcement available to the individual today is that of a hearing before the parole board. The ultimate reward of release is too remote to sustain an essentially undisciplined individual interested in immediate gratification throughout a continuing program of treatment. The problem is one of establishing intermediate steps where the inmate can earn intermediate rewards contingent upon and presented immediately after the desired behavior and building toward the ultimate reward of release. We might suggest passing grades as an intermediate reward. However, the grading system of itself is not sufficient reward. It is only

when good grades become associated with primary rewards that they can function as secondary rewards. Primary, or tangible rewards, that might be utilized and manipulated include improvement in living conditions, increase in social status, increase in behavioral alternatives, increase in range of leisure time activities, increases in opportunity for socialization, and decrease in custodial restrictions.

Motivation in the team approach includes informing the offender of all opportunities available to him in the institution and explaining exactly what each opportunity consists of. Concomitantly, the inmate is involved in the planning of his own curriculum with his classification team.

It is obvious that with the team approach, no one of the institutional services can efficiently achieve its goals without the total support of all other institutional services.

Function of Team Approach in An Effective Correctional System

Treatment Function

The team approach is primarily considered a mechanism by which correctional employees can reach a large number of inmates in what is defined as treatment. Even if some of the institutional services occasionally fail to accomplish fundamental personality changes, it is felt that the team approach makes inmates more accessible to other types of treatment.

Reassurance Function

There are countless suggested ways of dealing with the social and psychological problems of inmates. Our present state of knowledge does not provide a positive base for evaluating alternate methods of inmate management. Employees expected to perform a job under such circumstances want to believe there are solutions. The team approach of treatment provides the basis of hope that there is one. It is advocated as a technique for reforming inmates during their incarceration. The enthusiastic support provides reassurance both to correctional employees and inmates, both of whom stand to gain from participating.

Achievement Function

The team approach is within the capacity of all employees, including the lower echelon custody officials. Hitherto, the latter were unable to participate in the system's most highly prized and rewarded goal: treatment. The team approach provides all institutional personnel with a means to participate in achieving this goal.

Education Function

The correctional personnel learn to look at imprisonment from the inmate point of view, thereby enhancing their understanding of how inmates think and feel. Such knowledge heightens the capacity for empathy and insight of both employees and inmates. Furthermore, the integration of all institutional services provides the employees with an understanding of each other's problems and aspirations.

Experimentation Function

The total involvement of the institution provides a laboratory for testing the system's assumptions and beliefs. New methods must always be tried before data can be gathered to test them, and in the team approach, all personnel are encouraged to participate in the research.

Morale Function

A reform movement generally enhances the morale and prestige of the individuals and organization associated with it. The distinctive elements are replete with the possibility of substantive scientific discovery. Many of the staff and inmates in the team approach have invested emotion in the idea, and the activity tends to be watched with interest by the administrators in their professional reference groups. It makes every worker a "special case" and every client someone receiving personalized attention. Participation in a new program transforms what may have been "just a job" into something very exciting and full of discovery and creativity. Thus it contributes to organizational morale and prestige.

Integrative Function

Correctional institutions have a rigid line between those who manage and those who are managed, between administrators and line personnel, and between staff and inmates. In the team approach these lines are considerably blurred because of the partipation of the inmate in his own treatment planning and his increased communication with staff members, and because all institutional personnel become an essential part of the total treatment process and are concerned with all services, rather than just the particular ones they render.

Professionalization Function

The team approach has a highly prized goal: the professionalization of correctional work. In enhances both the status of the worker and the work he does. Many employees will supplement their knowledge by taking new courses and reading books. Through the interaction of all staff, everyone gains a better understanding of the problems. As professionalization proceeds, the prestige grows, and this gives attention

to the participants. Thus, larger numbers of trained personnel can be attracted to make a career in the program.

Achieving Total Institutional Involvement

Newism, an ideology which encourages change, is antithetical to the predisposition of any group, particularly in bureaucratic organizations (Eaton, 1962). Within a newistic philosophy is becomes difficult for people to defend vested interests from the demands that alternative methods be considered. Newism functions as an antidote to organization ritualism, but it also provokes anxiety in persons who do not feel adequate to the tasks assigned them. They have difficulty enough meeting existing goals. They prefer to organize their job so that there is always a standard operating procedure for problems with which they are confronted. In other words, whenever change in the established administrative structure is proposed or attempted, the reasonable comfort which people have found in the satisfaction of their needs is felt to be threatened. The same attitude of change is inherent in our institutions.

The outcome of any planned attempt to influence organizational change depends upon the degree of violation of the cherished beliefs and firmly established patterns of the target organization (Johnson, 1970). There is a maximum of resistance from the target organization when the change agents are regarded as violators of sacred beliefs and bearers of disorder and turmoil. The resistance is least when the change agent and target organization share basic objectives and evaluation of certain conditions as proper objectives for reform.

Secondly, the outcome of any planned change depends on money, prestige, and other resources available to the change agent. Without resources the change agent has little influence over the target organization, and therefore little likelihood of giving substance in practice to the abstract ideal goals he would like to achieve.

Internally induced reform emphasizes changes in the system by individuals and groups occupying roles and statuses within the system. Reform induced from within an agency is more likely to become permanent administrative practice. Also, since they are part of the environment to be revised, they are less likely to be dissuaded by false arguments raised against change. Reform is seen as a series of accommodations whereby relationships between groups within a system are recast in a new form, presumably more suitable for solving the problem which stimulated the reform effort.

If internally induced reform is to be the strategy, these individuals must be accepted by the prison staff as allies, rather than viewed as insolent usurpers. The correctional educator has a genuine opportunity to be an agent of change. He must be judicious, industrious, courageous, and tactful. Without delay, he should establish goals for the educational program, recognizing that an effective educational system must be an integral part of the total correctional system. Instead of

revolutionary steps, he will slowly develop a sound educational environment that is attractive to the inmates and at the same time is a force in promoting the efficient operation of the institution. He will recognize the value of keeping complete and accurate records of educational achievement as determined by standards of measurement. He will become familiar with prison customs and problems so he will know when and where to push for change. He should see reform as an accomodative process whereby change is achieved through a series of progresses, rather than through sudden and total blitzkrieg.

Institutional needs may be somewhat confused at times by the claims of various professional groups who have entered the correctional field during the last quarter of a century. The old-time prison keeper felt he had the answers. The chaplains were equally certain they held the key to reformation. Then came the industrialist, the educator, the psychologist, and the counselors. The different expectations of these people presented a confused picture to the administrator who was honestly seeking a way to do a better job of protecting society and returning inmates to successful living on the outside. Because our correctional systems are in a state of flux with its personnel already discontent with current conditions, the change agent has an opportunity to be effective by demonstrating a sense of dedication to constructive contribution to the progress desired.

The problem of the change agent finding common grounds with the existing personnel is not as difficult as it might seem. A study conducted by Eaton (1962) revealed that prison officials differ in the degree to which they emphasize one or the other philosophy. Those strongly inclined toward humanitarian reform procedures are usually just as concerned about their legal responsibilities to protect the public by keeping inmates under control, as are those who put more stress on punishment and control functions of the prison. The two approaches differ in emphasis rather than in absolutes. There is considerable agreement about such criteria of correctional effectiveness as avoidance of prison riots, adherence to prison rules, security of all prisoners and property, due process of law in prison management, avoidance of recidivism by discharged or paroled prisoners. Controversies among prison officials about policy rarely involve the criteria, but rather the method most likely to advance their attainment. The attitudes of custody-minded and treatment staffs are mixed and overlapping.

As treatment-oriented professionals entered the correctional field, they were usually appended to the existing administrative power structure. The burden of truth was on them, and they did not have sufficient knowledge, experience or numbers to actually take charge. As these professionals have become more expert in their knowledge, it has become increasingly clear that they have a great deal to offer correctional institutions. But to expect them to greatly influence the program of an institution in an administratively-appended department solely by means of tact, patience, relationship and salesmanship is unrealistic. First, it is unrealistic because the vested interests in the existing power structure do not want to relinquish their power. This is human nature.

Secondly, it is unrealistic because the professional people have been too few in the staffing ratio to accomplish the desirable changes through relationship and rational appeal. Thirdly, the division of custody and treatment into distinct administrative entities is artificial and the separation of them has been archaic and defeating.

After one accepts that professional people have something to offer corrections, then one must also face the fact that administrative reorganizations will be required to place the proponents of new ideas in positions of sufficient authority to alter the internal values, objectives and programs. This means that instead of maintaining the artificial separation of staff groups, there must be an amalgamation of administrative structure with all staff members expanding their roles to integrate the realities of correctional care in a total institutional involvement. There can no longer be rival departments, each of which is supposed to serve specialized needs of the inmates.

There is a need for the development of a common commitment subscribed to by administrators, program operators and researchers. The gap between administrator and treater could be substantially lessened if management committed itself to specific treatment strategies which would be given adequate tests and if it shared program decisions with treatment personnel. The gap between administrator and researcher could be narrowed through the adoption of a common frame of reference as to the role of evaluation in the total management process. The gap between treaters and researchers could be lessened through mutual commitment to the goal of improving treatment by evaluation. Treatment personnel would be called upon to enter actively into the evaluation process and would be seen as indispensable collaborators in research.

To revitalize correctional administration in the team approach it is necessary to categorize the staff according to broad program functions instead of the positions occupied in the usual table of organization. Thus, groups of staff working in a unity of an institution will collectively be given responsibility for guiding, disciplining and training inmates, rather than sharply separating these functions between counselors, guards, and teachers. This model of functional collaboration assumes that whatever the worker's special skills or major responsibility, he will devote some time and energy to the performance of other functions. Treatment personnel will participate in the collection and analysis of research data, researchers will be involved in program planning and in direct contact with offenders.

Offender advisory groups, create a more significant role for offenders and rank-and-file staff. Teams of staff and offenders can be assigned responsibilities for program planning, implementation, and assessment.

Such sharing of experiences will broaden the perspectives of staff members, communicate the interdependence of the institution's various functions and roles, and encourage the development of common goals and expectations.

Conclusion

Primary benefits from total institutional treatment of the public offender lie in sociologic, psychologic and economic areas. Sociologically, we have temporarily removed a destructive unit from society, to later replace that unit with a positive, contributing, productive unit. Psychologically, society learns to accept its responsibilities and learns that it does in fact have the ability to implement relearning systems which may result in a significant reshaping of deviant behavior. The individual in turn develops a new positive self-concept, together with the confidence that he can achieve desired rewards through appropriate social behavior. Economically, there is a direct dollar and cents savings. Each time an individual can be returned to society as a productive member, we save the costs of possible return to the criminal justice system as well as gaining from his contribution to the tax base. Additionally, an early return to society as a function of rapid acquisition of desired behaviors contributes to cost savings in the institutions.

Wherever one looks, one can see evidence of the readiness for change, an acceptance of the new and a milieu that permits our hopes and dreams to become tangible realities in the form of total treatment programs.

References

American Correctional Association. Manual of correctional standards. Washington: American Correctional Association, 1959.

Banks, F. Teach them to live. New York: International Underwriters Press, Inc., 1958.

Barnes, H. E., & Teeters, N. K. New horizons in criminology. Englewood Cliffs: Prentice-Hall, 1959.

Burns, H., Jr. Corrections: Past, present and future. Federal Probation, 1969.

Dorney, W. P. The educational program as part of a detention service, Federal Probation, December 1964, 55.

Eaton, J. W. Stone walls do not a prison make. Springfield, Illinois: Charles C. Thomas Publishers, 1962.

Glaser, D. Effectiveness of the federal correctional system. Federal Probation, December 1964, 3.

Johnson, E. H. Corps member in the correctional setting: Role limitations and potential as change agent. Unpublished report, Southern Illinois University, 1970.

McCormick, A. Education in prisons of tomorrow. The Annals of the American Academy of Political and Social Science, 1931.

O'Neil, C. F. Professional and custodial staff must merge their treatment efforts. Federal Probation, September 1965, 45.

President's Task Force Report: Corrections. Washington: U. S. Government Printing Office, 1967.

Sepe, R. F., & Stein, J. R. An evaluation of the teacher corps. Unpublished report, Southern Illinois University, 1970.

Tappan, P. W. Contemporary Correction. New York: McGraw-Hill, 1951.

U. S. Congress, Subcommittee to Investigate Juvenile Delinquency. Hearings: Testimony of C. Robert Sarver on March 11, 1969. Washington: U. S. Government Printing Office, 1970.

INVOLVEMENT AND STRATEGIES FOR ORGANIZATIONAL CHANGE

J. E. Brent
Federal Youth Center
Englewood, Colorado

Whether or not a program flies is often a question of good planning and communication. Planning should always involve implementation, and one of the chief items in implementation is staff or target group involvement. Just what involvement constitutes is largely a function of the planner's perspective. For example, one planner may see involvement as an end result to be achieved. Another may view involvement as a continuous phenomenon over which he is attempting to exert some control. For our purposes, we might view involvement as a tool for achieving other organizational ends or goals, in this case, the implementation of the adult basic education system in your institution.

All that has gone on before implies that involvement, regardless of perspective, is organizationally important. This is true, and as we examine why it is true, we can become aware of the explanations for a variety of programs in the past which have gone wrong, as well as be presented with endless opportunities for future program success. An organization, in abstract, is a set or network of roles, with associated facilities, designed to carrry out a specific set of tasks. As such, it constitutes a system for doing something, and as with all systems, changes in one part sooner or later affect the other parts. Second, the organizational task is ultimately carried out by people, and people can react to things, unlike dead salmon in an organization that markets canned salmon. Already a set of requirements are upon us; people have to be dealt with since they can react. Locked together in interdependent sub groups, people have to have relationships with each other so that the work can get done with as little fuss as possible. For example, education must depend on the parole section to feed people into its program and to monitor their progress. Additionally, they depend on custodial forces to delivery bodies to be taught, and to help maintain discipline.

To further complicate matters, people can not only react to organizational decisions and conditions, but they often have personal goals which are not necessarily those of the organization. The organizational goal in corrections is to make it possible for a person to live legally and well on the outside through providing a set of adaptive skills and experiences, of which education is one.

Thus, who gets involved, the manner of his involvement, and the use of involvement as a tool for achieving ends become one of the greatest sets of considerations in planning any program. Whether or not the target group is actually getting into those things we want them to is vital. So is the manner of involvement. For example, if we conceptualize involvement as a continuum, are people alienated or committed, as opposite

ends of the continuum. How shall we involve people in program innovation? Left to their own devices, it is easy for correctional staffs to continue to perpetuate their own private truth about what needs to be done. In this fashion, the same faults can be perpetuated, though the effort to change is very great. Basic assumptions remain unchallenged. Newcomers with fresh approaches are often low in status, and not in a position to really be heard or to innovate on a large scale before becoming socialized into the organization's way of viewing things. It is a case of not being able to see the forest for the trees. Involved with the more objective views of outsiders, correctional staffs are challenged. And for each case of naivete encountered dealing with outsiders, the value of having basic assumptions challenged more than offsets any naivete.

As with this program, the Bureau of Prisons is now committed to a long term effort that seriously alters its previous course of action. There have been even the side benefits of introducing the systems concept to an entire bureaucracy and heightening awareness. Involvement is important. Remember that. The reasons why are endless, as are the effects.

Involvement implies interaction between people. The people interacting not only react and possess individual goals, but they do not occupy the same statuses in the organization or in the community at large. The importance of this is that along with status, there goes a certain outlook common to people in that status. Particularly within the context of the organization, there may be certain privileges or rights that are unequally allocated among participants. Thus, whether a participant is a teacher or principal or warden or officer will make a difference in the pattern of interaction that develops. Interaction can be too high for certain purposes, as in the case where the teacher can never get a moment away for planning time. When this occurs, the individual affected often experiences a loss of autonomy, while the organization's problem is a deflection of goals. Where interaction is too low, the individual's problem is anomie or normlessness, there is no group from which he can get guidelines for behavior; while the organization's problem is lowered participation or apathy. If interaction is unstable, then the individual's problem is disorientation, while the organizational problem is a tendency to factionalism or clique development.

In the situation where one is about to implement a program it is necessary to consider carefully (a) WHO will be interacting and how compatible their roles and personalities are for this situation, and (b) the RATE of interaction, too high, too low, or unstable. Returning again to our central picture of the organization with its interdependent sub-units, you can see how the relationships between units can be torn asunder by otherwise invisible factors such as these.

The Change Context: Involvement as a Goal to be Achieved

Robert Wright (1970) has used the term "organizational physiologist" to describe a man whose role it is to look at the organization's functioning.

Wright suggest that we look at the corporate body in sickness and in health, with a view to its overall functioning. The important point here is that Wright obviously sees sick and "well" organizations, and organizational diseases and pathology. The analogy is a useful one, and suits our purposes here.

We want, in innovating programs, to look at the organization as a body, subject to pathology and malfunction from certain kinds of "illnesses." The system approach takes this directly into account, examining closely the effects throughout the system body of the things we do to it. Just as cigarette smoking may seriously affect the lungs, so certain changes in organizational programming may affect its functioning.

One of the features of that organizational body is inertia or resistance. You will encounter it when you begin to program and implement. It will rear its head in various forms. As the physiologist, you will want to be on the lookout for effects that are likely to occur. Innovation is not always smooth. Problems are likely to come from two major areas: (1) the system you have designed is faulty and bugs have to be worked out of it, and (2) people who must implement the system may be resistive.

There are as many reasons for people to resist as there are people, but most of their complaints will come because your program causes a threat to their status or self-concepts. For example, one bureaucracy recently pushed the "learning by objectives" approach, requiring an alternation of the usual teaching style. The program utilized behavior modification techniques, and also had a system of rewards, in the form of promotions, to act as inducements. Actually, it was naive to believe that money itself would be adequate inducement. What developed was a deep schism in the staff. Older teachers resisted the new method, largely because they were unfamiliar with it and thus, felt threatened. New and younger teachers were familiar with the new techniques and immediately began to implement them. Very quickly, it developed that the younger teachers were getting the lion's share of both opportunities and promotions. A staff schism developed that has endured for two years and as of this writing has not been healed.

Resistance may, of course, also occur for strictly economic and union types of considerations, or for emotional-personality reasons. Often the latter is a matter of degree more than a strictly qualitative difference. One source of resistance that can nearly always be managed is the resistance occurring because people do not understand the new changes. This is a function of the willingness of planners to communicate clearly and simply and honestly with the target group. An immediate and sympathetic ear can also be of tremendous help.

Edgar Williams (1970) has set forth as effective a set of principles for overcoming resistance to change as I have yet seen. Williams points our attention to the social system of existing relationships and cautions us to recognize the extent to which we will be disrupting same. The effects of new organizational relationships to become used to can be

very disorienting. People need to be thoroughly apprised of what is going on. The new patterns have to be made clear and new responses encouraged. Williams goes on:

> We are quite willing to ask them to accept the new, but fail to spend enough time trying to get them to unlearn the old. Having learned to do something one way often makes it difficult to learn the new method, approach, or techniques. This "set" or behavior pattern persists and complicates new learning (Williams, 1970).

People should have the deficiencies of the present system pointed out, and the rationale for accepting a new set of arrangements explained. To clarify further, we must redefine what we are all about in such a way that the previous ways are obviously no longer applicable.

Williams points out as most authors do, that the group itself is often the effective vehicle for change.

> When a group and its various subgroups have harmonious relationships and well-understood objectives and goals, the group itself may become the prime mover in getting a change effected (Williams, 1970).

Often, in this context, it is good to use the time honored strategy of boring from within; planting the seeds for change within the group itself and promoting it so that the group itself asks for change. Another regular method should be to carefully consider the group's norms and interests. Groups usually exert pressure on their extreme members to conform, thus reducing the need for other types of administrative actions. This seems to hold even where the group has a respected but cautious leader who is trying to protect the group's image. According to Williams (1970):

> Recent research shows that when a decision involves some risk to all members of a group, the group as a whole is more willing to venture into change than is the individual leader of that group. The leader's sense of responsibility makes him cautious and the group itself is more willing to take the risk . . . . The reluctance to assume risks represents one of the major obstacles that we must contend with in dealing with individual managers.

In the writer's experience, additional aid in implementation can be had by being able to better understand the nature of power in organizations. Most often, it can be observed to rest among shifting coalitions of people in various roles. It seldom rests in one figure or monolith. Watch carefully the major interests to be served by your program along with the deleterious effects it will have on others. These issues will form the basis for the coalitions that develop, and can often be predicted in advance.

Summary

Involvement can mean an end in itself, a variable to be controlled, or a tool for use. In all three ways it is of vital importance to any program's implementation. By recognizing that the organization is essentially a network of roles carried out by people in interdependent relationships, we can effectively plan and communicate programs that should not be hampered unnecessarily. The success of achieving involvement as a goal may turn on how we plan to overcome the disease of "resistance" in the corporate body. We must provide a rationale for leaving the old as well as for accepting the new actions. We must be sympathetic to the problems of those being changed. We must make the new relationships and objectives compatible ones that the workers or students can identify with and find useful. Always, we must know our groups socially, so that their interests may be effectively used in their own behalf to form effective coalitions. Good Luck!

References

Berrien, F. K. General and social systems. New Brunswick, N. J.: Rutgers University Press, 1968.

Caplow, T. Principles of organization. New York: Harcourt, Brace & World, 1964.

Etzioni, A. A basis for comparitive analysis of complex organizations. In A sociological reader on complex organizations. New York: Holt, Rinehart & Winston, 1969.

Festinger, L. Informal social communication. In E. Hollander & R. Hunt (Eds), Current perspective in social psychology. New York: Oxford University Press, 1963.

Merton, R. K. Social theory & social structure. New York: Free Press, 1970.

Williams, E. Changing systems and behavior: People's perspectives on prospective changes. In W. C. Ryan (Ed.), The manager's handbook. Bloomington: University of Indiana, Graduate School of Business, 1970.

Wright, R. Are you wasting your consultants? In W. Ryan (Ed.), The manager's handbook. Bloomington: University of Indiana, Graduate School of Business, 1970.

IMPLEMENTING AN ADULT BASIC EDUCATION PROGRAM IN CORRECTIONAL SETTINGS

George B. Boeringa
Manpower Training, Community Colleges
Honolulu, Hawaii

Introduction

Statement of the Problem

The need for new personnel orientation and for regular staff in-service training is so apparent, that the general practices of many correctional education systems to effect a practical, worthwhile program in these areas are evidences of administrative failures and shortsightedness. It does not make too much difference whether the individual school system or institution under observation is located in a swank, suburban setting or in a depressed, rural area; it makes little difference if the teachers involved are well paid or poorly paid; it is of little consequence if the majority of the students are highly motivated, verbal college-bound seniors, or minority group, foreign-born kindergarteners. The fact of the matter is that most of the personnel who will be working in these varied settings and situations will approach their responsibilities with varying degrees of apprehensiveness and uncertainty. Furthermore, once these instructors have gained experience in their school systems, there will be a continuous need to stimulate, encourage, and retain them. The alert administrator realizes that the "experienced" staff member who is starting to utilize last year's lesson plans needs just as much attention as the fearful substitute who appears for his opening day assignment.

Obstacles to Correctional Education

This need to assist staff in gaining insight and understanding has been especially critical in correctional work, since most of the personnel who are members of an institutional educational team have had the task of dealing with the school failures of other school systems. In working with delinquent, often times hostile, "reluctant" learners, educational administrators have had to cope with the problem of recruiting, training, and retaining instructors in school programs which did not offer as attractive remuneration as surrounding "normal" school systems did. The insecurities fostered by working with poorly motivated, emotionally disturbed adolescents have made it mandatory for supervisors to focus upon staff orientation and in-service training, since most of the current teacher-training institutions spend little time on how to cope with offenders of this kind. Furthermore, too many of the teachers who appear on the scene to work with these culturally depresed, troubled

youths are from middle class backgrounds and have little understanding of the motivations, experiences, or aspirations of these students.

A further complicating issue is that in most facilities dealing with delinquent youth, there is usually a serious hiatus between treatment personnel (teachers, social workers) and custodial personnel (guards). Since the treatment staff is usually outnumbered, the authoritarian atmosphere of most institutions in which correctional educational programs are to be found makes for increased insecurities on the part of the teachers. Many of the treatment personnel do not help when they assume a condescending, "I'm the professional" attitude and think that their total obligation is to solely assist the inmate. The custodial arm of the facility feels burdened with the responsibility of confinement rather than correction since little credit is given them for rehabilitation, but much woe can be heaped upon them should an offender depart prematurely. The treatment staff is concerned with a long-range outlook of reformation, while the custodial branch too often is concerned about the safekeeping of its charges during each eight-hour tour of duty. Both approaches need to be modified and made more realistic. Fortunately some rapid strides in this area have been made in recent years.

Proper Orientation Procedure

The basic approaches and ingredients of a good, sensible orientation program and in-service training plan are common to all school settings, as mentioned before. Let us first turn attention to proper orientation procedures.

Kimbal Wiles (1952) outlines the need for such a program. He states that one of the first responsibilities of a supervisor to a new employee is to make him feel that he is wanted. Too often new teachers get the feeling that no one cares whether they are on the job or not. Making a new teacher welcome involves specific things and specific steps:

a. Have the supervisor or teacher-committee contact the newcomer long before his actual teaching assignment begins. A brief note of welcome could do a lot to bolster morale of the new, apprehensive teacher. If the new teacher is coming from out of town, suggestions should be made concerning suitable housing (outside of the institution, if this is to be his teaching setting) for his length of stay.

b. All pertinent and up-to-date information about the community in which he will teach should be tendered to him in the form of local newspapers, teaching kits, and personal notes. The institutional community usually will have many materials which should be offered in addition to the surrounding neighborhood data.

c. Conditions of employment, salary, pensions, hours, and legal responsibility should be carefully discussed between

the supervisor and the new teacher. This is especially important in an institutional setting because of the legal complications of inmates' rights, contraband, and restrictions.

d. The new teacher's duties (academic, administrative, and social) should be carefully explained to him so as to let him know what is expected.

e. A pre-school conference should be utilized to allow the perspective teacher to meet the other members of the faculty and institutional staff. This should be conducted in an informal fashion, and the newcomer should definitely be introduced to the maintenance men, the guidance counselor, the school clerks, and the correctional force, as well as other specialists to whom he might turn for help in special problems which arise during the school year. To this end it has been suggested that the teacher spend more time right in the cell blocks, mess halls, workshops, so that he can learn something of the other staff members' responsibility and can view the offender at hi. worst as well as at his best in settings other than an interesting classroom.

f. All cumulative records and reports concerning the pupils in class should be made available for his scrutiny, and teachers and other staff members who are familiar with specific problem cases in his class should be available for conferences with him.

g. All records and reports which must be kept by the teacher should be explained by either an assigned teacher, or by one of the supervisors.

h. The hardware and software to be used during the coming term should be placed in the new teacher's hands as soon as possible to afford him the opportunity to acquaint himself with them. As soon as feasible, permit the new teacher to order supplementary material with which he is familiar.

i. Try to get the new teacher working with other staff members in committees on real problems concerned with policy, procedures and programming. Be sure that he is assigned to a committee in which his potential may be realized.

j. Engage the newcomer in the school's intervisitation program, and be sure to point out to him that the school hopes he will be able to contribute new approaches to the procedures.

k. Arrange to have demonstrations by the supervisors or specialists in various subject matter fields.

1. Have short, informal observations by the supervisor and stress the positive, concrete results that the newcomer has obtained in his teaching.

New Teacher Obligations

The responsibility for an effective orientation program does not lie entirely with the school administrator. The new teacher has some obligations as well. Although the suggestions of Edward G. Olsen (1954) pertain to community school settings, the prospective teacher in an institutional setting can adapt and utilize them as well.

a. Study the correctional setting and community . . . . its mores and customs, factions, and cleavages, needs and values . . . leaders and "causes."

b. Make a wide variety of social contacts with people of different ages, races, nationalities, classes, political and religious beliefs . . . help lessen the social difference between teachers and other occupational groups.

c. Become acquainted with community agencies and their leaders, and demonstrate your interest in cooperating with them.

d. Attend public meetings in the community, talk with people, introduce yourself, express your appreciation of what others do for community welfare.

e. Participate with others in studying community needs and attacking community problems . . . be more interested in helping groups formulate and achieve civic purposes than in securing personal or institutional publicity.

f. Become well-versed in techniques of scientific thinking . . . remain objective.

Guidelines for In-Service Education

Concomitant with the responsibility of initiating a practical orientation program for newcomers is the administrator's obligation to encourage staff to participate in a present in-service training program. Morphet (1967) mentions the need to reorganize and improve college and university programs of teacher preparation. He states that both college and public school authorities have been studying the teacher education program in institutions for higher learning with the idea that improvements in the teacher preparation curriculum can and should result in better prepared teachers. He emphasizes, however, that regardless of the excellence of the work in teacher education institutions, every school system needs a good in-service program for the improvement of teachers and training programs.

Parker has presented a number of guidelines for in-service education. There is general expectation in the community and in the correctional setting that the educational program and the contributions of the staff will be constantly improved. The following guidelines are adopted from Parker.

a. The climate within the group should be conducive to building mutual respect, confidence, support, and creativeness.

b. All members of the group are encouraged to propose and discuss new ideas, and to try out those that seem promising.

c. The fact that individual members of the group differ is recognized and each is encouraged to make his contribution in his own way.

d. Educators are encouraged as individuals and as members of groups to formulate goals and plans and to work on problems that are meaningful to them.

e. Procedures for moving from decisions into programs of action are kept as simple as possible.

f. Appropriate resources are identified, made available, and utilized as needed.

g. Provisions for appraisal are developed as an integral aspect of the program, and the results are utilized in effecting improvements.

There are many specific steps and procedures which have been successfully utilized in enlightened school systems. Educational administration material abounds with these suggestions, and some of them are:

a. Through observation and informal talks with his teachers, the supervisor should discover the needs of each teacher on his staff. Needs will vary with individual differences of talent, readiness, and training.

b. The supervisor should make himself a competent leader. Before he suggests a weakness, he should be able to make definite suggestions for improvement. Therefore, he must have a good knowledge of good teaching techniques, how to obtain expert guidance in special areas.

c. The teacher must be able to recognize his own needs, and desire improvement. This can be done by any method that allows the teacher to share in the evaluation of himself and the planning for his own improvement with the guidance of his supervisor.

d. Should there be staff that are particularly disinterested

in implementing a new field such as developmental arithmetic, it may be better for the supervisor to start over with a few interested, competent teachers with whom he will be assured of success.

e. Curriculum committees of teachers should be organized for allotting time before the term begins and during school hours for discussions to be held concerned with improving the existing curriculum. Teachers see the need for constant revisions and improvement and this will lead to teacher growth.

f. Faculty meetings, which include everyone and which deal with total problems, are valuable for clarifying teacher thinking if they are conducted in a truly democratic fashion.

g. Teachers should be encouraged to participate in workshops conducted by professional institutions or by their own faculty. Working with other teachers who are confronted with similar problems is invaluable.

h. Masters and doctoral candidates should be encouraged to be concerned with practical school system problems in their studies, and the administration should do its utmost to cooperate and aid the candidate.

i. Teachers should attend conventions and professional meetings with the blessings of the adminiistration. They should be asked to report back to the rest of the staff.

j. With discretion and moderation, the administration should employ paid consultants who are experts in various fields to advise the teachers.

k. The supervisor "himself" should put on demonstration lessons at times to show the faculty new techniques.

l. The adminstration should establish apprentice intern training for prospective administrators. These teachers should work closely with the principals on tasks which they will have to cope with later in their careers.

m. The administration should place at the disposal of the faculty current professional literature, films, and other visual aids.

Attitudes are important considerations in the implementing of a sound adult basic education program. If a teacher, as Albert Lynd (1953) describes, pursues further training for which he feels no need simply to get a pay increment the program will probably be ineffectual. However, if the situation exists as Ruth Strang (1953) describes, the situation

is well in hand.

Guidance and Correction Through Adult Basic Education

The great underlying principle in the field of corrections is that a large percent of offenders can be corrected and that the reformation is the right of the offender and the duty of society.

Crime is usually the expression of a weakness, mental, moral, physical or a combination of two or more of them. With proper knowledge of the law, and a better understanding of the demands of society, the chance of crime is lessened. Also, through increased skill there is greater opportunity for the educated ex-offender to find stable, useful employment, thus facilitating his readjustment.

Offenders in institutions range from the college graduate to a high percentage of illiterates. The adult basic education programs of a correctional institution then must shoulder the responsibility of taking the offender just as he arrives, with all his neglected faculties, weaknesses and defects. The adult basic education program cannot be satisfied with merely giving the offender a scholastic and vocational education, but must bolster him up in all his weak points for future desirable social behavior.

Aims of an Adult Basic Education Program as it Relates to Social and Vocational Guidance in Correctional Settings

Adult Basic Education Guidance in Social Education

Social education embraces all those educational activities whose major purposes are to revise attitudes toward social institutions and the individual's relationship to them, and to develop interest and skills needed in acceptable social living. Such activities are not designed to develop the skills and knowledges of specific trades, but to provide the training basic to all desirable human relationships. "Bill not only lacks trade skills but carries a chip on his shoulders thinking everyone is crooked, that government is a racket, and that the only way to get along is to be sure of your own cut, 'Do the other fellow before he does you.' Bill is in dire need of social education."

This should not be taken to mean that social education is more important than other types of education. Quite the contrary. The education of an individual must include growth along vocational and social lines at the same time. Many elements of vocational training affect attitudes and therefore further social education, while many elements of social education contribute to vocational efficiency. Social education is the development of marketable skills.

Activities in the social education field are:

1. The academic subjects: social studies, history, geography, English, mathematics, general science.

2. Mental hygiene: classes in personality development, consultations and guidance.

3. Health and physical education: classes in personal hygiene and health.

4. Recreational activities: sports, games, entertainment, hobbies, clubs, publications, reading, organizations.

5. Arts: music, dramatics, sculpture, painting, and sketching.

6. Cultural development: discussion groups, library research, and reading, personal relations.

The aims, then, of social education through adult basic education are:

1. To bring the offender to adopt goals and attitudes which are in accord with those of society.

2. To show the offender that by furthering the interests and standards of worthwhile social groups, and having pride in contributing to and participating in achieving group goals builds growth and confidence.

3. To develop points of view which will make apparent to the offender the futility of committing criminal acts, and the advantages of law abiding post-institutional living.

4. To stimulate and develop desirable interests which will enable the individual to live a worthwhile and yet interesting life including his leisure time interests and activities.

5. To stimulate and make possible sustained interest and effort toward self-improvement.

6. To develop skills, understanding, and knowledge which will enable the individual to perform the ordinary duties of every efficient citizen.

Any program of social studies must be based on realistic understanding of modern conditions and how they come to be. This is particularly true of social studies in correctional settings. It is very important, therefore, that proper guidance is given because it is the complexity of modern living that makes adjustment difficult for the released inmate.

Because of many major changes the needs of society also change. Basic institutions such as the church and school are finding it necessary to revise their objectives and procedures if they are to survive and function in modern living.

All this means, then, that while science and invention in physical fields have developed unbelievably, social invention has lagged. People these days are confused in their thinking; nothing seems certain; the future seems hopeless to many. The vital questions in the United States are: (1) Can sufficient general social intelligence be developed in the majority of citizens to enable democratic government to continue to function? (2) Can democracy develop leaders and a social and economic organization which will enable all our people to live satisfactory lives? Guidance in adult basic educationis a vital necessity if these questions are to be answered in the affirmative.

The individuals behind correctional settings are the products of our confused society. Through this confusion they have developed many erroneous and corrupt notions. In addition to the organized activities listed, it must not be forgotten that social education depends in large measure upon the entire morale of the institution and the contacts between inmate, correctional officer (guard), supervisor, and other personnel. Desirable changes of attitude often come through the way in which an understanding crew supervisor or guard handles an offender and the fairness with which institutional policies are formulated and administered.

Vocational Guidance in Adult Basic Education

It is evident that the guidance governing a program of vocational education within the correctional institution must be influenced largely by conditions as they actually exist in the occupational world in which the released offender must eventually find employment.

Occupational trends during recent decades have undergone a rapid transition. For a considerable period, basic industrial methods and trade practices remained more or less static. Apprenticeship systems followed an accepted routine. Each vocation had a recognized content of basic processes and essential skills and their attainment was possible within a reasonable apprenticeship period.

The rapid technological developments of the Machine Age and Power Age have resulted in a multitude of problems which have changed the entire front of vocational education. Modern productive methods have brought about intensive specialization in straight-line production operations on the one hand, and an increased demand for highly skilled tool and die makers and technicians on the other. The "occupational shift" in employment opportunities, as a result of new inventions and revolutionary changes in industrial processes, in addition to the disappearance of frontiers, have decreased the demand for trained workers in some vocations and increased the demand in others. These sudden shifts in demands for vocational skills have frequently left many trained workers without a means of earning a living.

Industries have expanded until the man-to-man contact between employer and employee has been almost completely lost. Generally the

"boss" is an employee working for many thousands of "owner" stockholders residing in all parts of the country. Group rather than individual bargaining has been the result. Workers have organized, employers have organized, and their differences are settled by "arbitrating committees." It is evident that the relationships existing between employee and employer have become so remote and so complicated that the worker must have a fundamental grasp of the social and economic phases of this relationship. Knowledge, not emotion, should govern the relationships of the worker with his employers, with his government, in his election of responsible officers for his union, and in general response to the social and economic environment.

Another aspect of our industrial system which affects vocational education is that production is geared up to such an extent that it is seldom if ever in step with demand. The resulting "peaks" and "slumps" in the economic curve mean a constantly changing picture of overtime or unemployment for modern workers. The accelerated production per man has so exceeded the public's ability to purchase the individual worker's potential output that his employment span is constantly decreasing. As a result, youth finds it difficult to secure employment, and men, still young, find that they have reached their limit of usefulness in some occupations. Thus today, vocational guidance in adult basic education is more essential than ever. Preparedness cannot be achieved unless programs for vocational training are designed to meet current occupational demands.

The offender, upon release, if his period of confinement has been of any great length, faces an unfamiliar world. He must be trained to live successfully in that world. If he is not, he will shortly return to confinement and again becomes an expensive burden upon the taxpayer. Today more than 90 percent of all offenders are released from corrective settings within a few years. These individuals must be equipped to earn a living in a highly competitive and rapidly changing world if they are to use fair means of securing food, shelter and clothing. This requires an adult basic education program with proper guidance in vocational training which is based upon individual offender needs as well as upon the existing employment situation. Any acceptable philosophy of vocational education must be based upon the results of factual research and must be flexible in practice and outcomes as the changing environment for which it trains.

The current employment situation demands workers trained in a wide variety of skills. The lower the skill required, the greater the available supply of workers and hence the greater risk of unemployment. It is evident, therefore, that those of lower mentality can be trained for employment in jobs within their capacity but that the wider the range of occupations mastered up to a limited level of achievement, the greater the opportunity for continuous employment. In other words, our vocational education policy must include both <u>vertical</u> and <u>horizontal</u> training. Vertical training applies to those individuals possessing considerable vocational capacity. Such individuals should be trained intensively to attain a high degree of skill in a particular vocation.

Horizontal training applies to those inmates whose capacity to be trained is low; such individuals should receive training in several trades, but only those skills should be taught which the individual can acquire.

The offender released from a correctional institution should have acquired not only usable skills but that pride in high-grade performance which will enable him to enjoy doing a job well. He must be trained to the point where he gains more satisfaction from the performance of legitimate work than from criminal activities. The capacity to perform the skills of an occupation better than someone else, and the ability to interpret the "cause and effect" of the technical phases of each operation all lead to satisfaction which can eventually replace less socially desirable ones.

No matter how thoroughly a man is trained, the processes and the machine upon which he works will change. His training, therefore, must extend beyond the pure habit stage. Habitual skills must be based upon a background of technical information through which the worker can reason from cause to effect in order that he may make proper adjustment to the daily changes and innovations taking place in his occupational environment. He must be able to reorganize his skills and his concepts in such a manner that he may meet the demands of each new situation successfully.

In addition to training offenders in occupational skills for use after release, vocational education has another important contribution to make to the rehabilitation of offenders. It has often been said that correctional institutions are breeding grounds of crime. It is evident that idleness could easily foster the development of socially undesirable attitudes.

Vocational employment within the institution offers experiences and problems which requires thinking along acceptable lines and make it possible for new interests to be substituted for less desirable ones. Vocational training offers a medium for physical activity and emotional release. Inactivity breeds morbidity and bitterness, and fosters antisocial attitudes and vicious practices.

To achieve the outcomes discussed above in a correctional institution, a program of vocational guidance in adult basic education programs is essential which sill insure that each offender is assigned to the tasks and training best suited to his individual capacities, interests, and ultimate opportunities for placement.

A Team Approach to Program Implementation

In order to accomplish the goals and behavioral objectives established for your particular state or institution, the cooperation of all concerned should be enlisted to implement the preseribed program, both internally and externally. The goals should be explicit, and all should work toward the common goals that evolve around the offender. One must

coordinate institutional and community resources in a team approach to implement the program.

Resources

Internal. The following institutional people who can help implement the program within the institution are:

1. Superintendent (Warden)	He supports the program wholeheartedly endorsing it and giving adult basic education high priority.
2. Assistant Superintendent	Treatment: He gives full support to the program by backing learners, teachers, and Director of Education 100 percent.
3. Business Manager	Understand financial need of a successful program--He assists with the educational budget and purchasing needs, materials, supplies, and equipment.
4. Director of Education (Academic)	He is responsible for developing and administering a meaningful program geared toward learner needs.
5. Director of Vocational Education	He is responsible for keeping up with job opportunities and with the needs of industry.
6. Case Worker (supervisor, manager)	Profile and programs for the learner.
7. Food Manager (supervisor, manager)	He encourages, aids learner in the program.
8. Physical Plan Director	He coordinates physical needs with learner needs.
9. Industrial Manager	He aids in planning of program to upgrade education.
10. Others	

a.	Job Placement Manager	Satisfies the needs of the community, labor market, etc.
b.	Pre-release manager	He aids with personnel problems such as money, housing, and others.
c.	Chaplain	He counsels and encourages.
d.	Director of Physical Training	Instills sportsmanship.
11.	Doctor (Medical Department)	He satisfies health needs.
12.	Assistant (Associate) Warden	Custody-He must understand the educational needs of the offender, to encourage his staff and offender to participate in program.

External. Often, correctional educators fail to recognize that there are many community resources which can assist them in obtaining the objectives of their plan. Following are a number of community resources and how they can be utilized in the educational process. This list is based on Maddox (1970) and is not intended to be exhaustive.

1. Local school systems. These can give advice on modern media and their utilization. Part-time teachers may be obtained through this source. Offenders may be enrolled in local adult educational classes. Institutional classes may be made a branch of the local school, then certificates and diplomas can be issued by the local school system. This creates motivation which is badly needed in the correctional setting.

2. College and Universities. Offenders can attend local colleges on study release. College staff members can give advice on latest techniques in adult education. They can assist in developing and evaluating curriculum. Research projects can be conducted which will help to improve the instructional qualities of the school.

3. Adult Basic Education Program. This program operated by the State Department of Education can and does support programs of instruction in correctional institutions. The special projects and teacher training institutes supported by the U. S. Office of Education constitute invaluable resources for information, materials, instructional packages, and staff training.

4. Office of Economic Opportunity. This organization provides funds through the State Departmens of Education for the

training of teachers of adult basic education and can also provide equipment for reading laboratories.

5. Manpower Development Training Administration. This organization assists adult basic education in corrections and vocational programs by giving advice and assistance in developing the foregoing programs. Local or district Manpower Development Training Administration officers can provide assistance.

6. Veteran's Administration. Assistance can be obtained for individual offenders. Payment of particular courses or classes can be obtained. Funds required to meet expenses at a local educational facility can be obtained. The local Veteran's Administration should be contacted for further information.

7. Vocational Rehabilitation Administration. Counselors and testing experts are available to assist offenders in planning for release.

8. Public Health Service. Free and inexpensive materials and discussion group speakers are available through this source.

9. Cooperative Extension Service. This service will provide speakers, instructional materials and demonstrations. The material is interesting, written on the adult level, and utilizes appropriate vocabulary. This is an especially good source for female institutions.

10. Business and Industry. Business and industry can help set standards for vocational programs, provide speakers, supply application forms which can be duplicated and used as curriculum material, and assist in setting up vocational shops. If a business or industry conducts an adult basic education program, its director, or staff, may be available to lend their expertise to an adult basic education in corrections program. Members from industry will be willing to act on advisory councils. Insurance companies, loan companies, and railway companies have free materials which can be utilized in the curriculum. This increases interest which is so desperately needed in an institutional setting.

11. Labor Unions. Selected members can act on the advisory council. Their education officers can advise the teachers in the adult basic education program regarding vocational materials which can be utilized in the classroom to make the classes more interesting.

12. Civic Clubs. Organizations in the community will often operate branches within the institution, or even assist with the education program.

Each institution is different, therefore the goals and objectives of correctional education should be relevant to the real life conditions the parolee will meet.

Summary

Teachers may expect many kinds of assistance from the Supervisor of Education or principal in his roles as supervisor, administrator, and promoter of good public relations. He should be an inspiration to teachers and have faith in their ability. He should kindle their enthusiasm for doing right by every student. He recognizes the difficulties under which they work. He shares his philosophy with teachers: his spirit pervades the school. In the light of his vision, all move forward together.

The administrator of the adult basic education program can in turn have access to many kinds of assistance from both internal and external resources, some of which the author hopes will be of help to the administrator who wishes to implement a good sound adult basic education program in a correctional setting using the team approach.

Education is the vital force in the reformation of fallen men and women. Its tendency is to quicken the intellect, inspire self-respect, excite to higher aims and afford a healthful substitute for low and vicious amusements. Adult basic education therefore is a matter of primary importance in the field of corrections and should be carried to the utmost extent consistent with other purposes of such institutions.

References

Clark, W. Vocational guidance for junior and senior high school students. Educational Bulletin, 1959 (15).

Fisher, C. Guidance--It is our work. Agricultural Education Magazine, June 1962.

Hoppock, R. Occupational information. New York: McGraw-Hill, 1957.

Hutson, P. The guidance function in education. New York: Appleton-Century-Crofts, 1958.

Maddox, W. Using community resources. In T. A. Ryan (Ed.), Collection of papers prepared for 1970 national seminars. Honolulu: Education Research and Development Center, University of Hawaii, 1970.

McCleery, R. The strange journey: A demonstration project in adult education in a prison. University of North Carolina Extension Bulletin, 1953, XXXII (4), 1; 41.

Morphet, E. Educational organization administration: Concepts, practices, and issues. Englewood Cliffs: Prentice-Hall, 1967.

Olsen, E. School and community (2nd ed.). Englewood Cliffs: Prentice-Hall, 1954.

Strang, R. The role of the teacher in personnel work. New York: Teacher's College Press, 1953.

Wallack, W., Kendall, G., & Briggs, H. Education within prison walls. New York: Teacher's College Press, 1939.

Wiles, K. Supervision for better schools. New York: Prentice-Hall, 1952.

A TEAM APPROACH TO PROGRAM IMPLEMENTATIONS

James A. Williams
Missouri Intermediate Reformatory
Jefferson City, Missouri

The team approach to program implementation should provide the fullest understanding and use of total resources to meet the challenge of the adult basic education program in the particular institution for which it is designed. The team may vary within the institution for which it is designed dependent upon size, personnel, and locations. Involvement of all personnel within the institution follows the team's design and plan for the program.

The importance of the team approach gives total life environment within the institution. Every individual involved in the function of institutional activities from policy making to the action areas are to be included in the team approach. Goals and objectives cannot be met on a narrow line follow through of the program. Too often, the administrators, treatment, custody, and service staff know the program, but there are no lines of communication or sharing of information. The so-called program dies from lack of vitality, or proceeds down narrow limits of function without broad participation. The team approach will broaden lines of communication, improve action, and will result in the improvement of the program which was designed to educate and rehabilitate inmates.

Final outcomes of evaluation and assessment in the model approach will be improved through the team approach. Total involvement gives the whole environment of the institution an opportunity to give its fullest consideration to the adult basic education program within the institution. Too often within an institution the narrow confines of areas of responsibility function in a climate removed from other areas. The team approach has the advantage of staff working together for the common goal of providing the best program for the inmate within that institution. New areas of opportunity will be revealed in meetings of the team. Total resources will include all personnel and plant facilities available for the program.

The Director of the Department of Corrections may be an active participant at team meetings and more than likely will be an ex officio member of the team. The Deputy Director may be the participant in the team meetings and planning. The Warden, or Superintendent, will no doubt be the activity chairman of the group. His endorsement and leadership will be necessary to further the program. His leadership can provide the impetus of dissemination of information, bringing all resources together for the implementation meetings. Each of our institutions will no doubt have different tables of organization and officials within itself to make up the team membership. The team that is proposed here will no doubt be very similar to most of the institutions.

The Assistant Superintendents or Wardens of Custody and Treatment, the Supervisors of Academic and Vocational Education, Director of Food

Services, Plant Manager (Engineer), Supervisor of Industries, Chaplains, Recreation Director, Institutional Parole Officers, and the Medical and Health Services Director should be the team to implement the program. Many reorganizations of Department of Corrections have taken place and will continue to redesignate areas of responsibility by statute and by program to carry out the different treatment and custody functions for the particular institutions. Treatment functions now organized tend to follow all of the non-custody programs for inmates. The team design must be determined by the very nature of the institution where it will work as to size, personnel, and resources. The program must follow the guidelines of total number of inmates involved and the length of time the team will have these students for the program.

The team approach has the excellent opportunity of making training at least equal to other functions of institutions. It will hold its meetings during scheduled working hours so that the most can be done to implement the program. The enlightenment of all team members to the other areas of responsibility within the institution will also be an excellent springboard for the program.

The team approach gives the institution an excellent opportunity to plan alternate routes to be taken in scheduling training for individuals excluded from other programs because of the time, the place, and inmate's work program. The one-half day work with one-half day training program lends itself to doubling the number of inmates who can participate in academic and vocational training. It would then be possible to find that more constructive program acitvities for the inmate are possible. Whatever the size, resources, or location of the institution the team approach will give the fullest potential of the resources and personnel for the program. Overcoming shortcomings will be sharing of areas not previously used in the past.

The role of each member of the team then is more in keeping with the role of adult basic educators elsewhere. The shared responsibility for the program is an imprtant part of the total individual effort in the various areas of the institution. Too often the narrow limits of custody, education, and industries, tend to encompass only vertical importance when considered separately. However, with the team approach a horizontal impact upon improving the chances of the inmate achieving his goals and objectives successfully are improved in sharing the total environment.

Implementation of the program should not be the end of the team effort. The team effort should continue through each inmate's successful completion of his program. Continual and periodic team appraisal and reappraisal is most important if the system approach is to yield its fullest in the model designed for the particular institution. Improvements upon function and performance gain can be assessed by the team in later evaluations. Actually the positive elements of the team approach may still need some reinforcement from outside resources, depending again upon location and availibility of contributions to the total program.

One can see that the community resources in team planning can be unlimited when wisely and appropriately used within the institution, if

the resource meets the needs of the particular program. Primary considerations are those associated with the learning program of the inmate. Programs designed for ornate blandishment or just to enlarge the perimeters of the institution should be looked upon with care and avoided by the team.

Community resources to be explored by the team should be surveyed for potential assistance to the inmate and the inmate population. Once again, the external organizations depend upon location, size, and the particular area of the institution and the community near it. Newer approaches in correctional education have been used in releases of inmates to attend vocational, technical, on-the-job, and other coordinated programs to assist inmates in educational and vocational training.

The team might well include avocational training using community training resources to help the inmate reach his fullest potential in a correctional setting. A review of local adult training courses in the community will reveal a wide variety of courses being offered in the local public schools, junior colleges, and colleges.

The team can evaluate the joint effort of the community in economic support and purely voluntary contributions to the program. State, federal, and community government agencies are within the reach of every institution. State level agencies more than willing to offer assistance in the form of resources and advice include those concerned with education, vocational rehabilitation, veteran's affairs, law enforcement, public health and welfare, manpower development and training, cooperative extension services, and colleges and universities. In addition, there are many community service clubs and organizations that are more than willing to give aid to worthy projects such as an adult basic education program for an institution.

The team approach to bring all resources to bear upon the problem of adult basic education in an institution has been presented only as a guide to follow. There are certainly more external areas of involvement that could be explored. Once again, without being "hemmed" in by immediate boundaries of site, it is only a small suggestion that the problems of institutional operation be fully revealed through an honest public relations program by the team.

The team by its very nature then has the opportunity, the challenge, and the ability to approach the implementation of the program within the institution. Its strength in horizontal approaches across areas of custody, education, administration, supporting services, treatment, and any other program within the institution brings the resources to bear upon the beginning of the program. Internal and external resources can certainly be more adequate than the narrow, vertical approaches of the past.

A last reminder might be that the team must have a continuous approach to stimulation of the program. First assessments should not be considered the last. Apparent weaknesses will be revealed. Strengths that were not apparent will be revealed. But the cardinal principle for

the program is: THE ADULT BASIC EDUCATION PROGRAM IN THE INSTITUTION IS TO HELP EACH INMATE REACH HIS FULLEST POTENTIAL AS AN INDIVIDUAL.

References

Bergevin, P. A philosophy for adult education. New York: The Seabury Press, 1967.

Knowles, M. S. The modern practice of adult education: Androgogy versus pedagogy. New York: Association Press, 1970.

Ryan, T. A. (Ed.). Collection of papers prepared for 1970 national seminars. Honolulu: Education Research and Development Center, University of Hawaii, 1970. (a)

Ryan, T. A. (Ed.). Model of adult basic education in corrections (Experimental ed.). Honolulu: Education Research and Development Center, University of Hawaii, 1970. (b)

Ryan, T. A., & Silvern, L. C. (Eds.). Goals of adult basic education in corrections. Honolulu: Education Research and Development Center, University of Hawaii, 1970.

THE IMPACT OF INSTITUTIONAL INVOLVEMENT

Joseph G. Cannon
Minnesota Department of Corrections
St. Paul, Minnesota

The battle cry today, in those correctional systems that are up and moving toward contemporary goals, is "Involvement!" The President's Commission on Law Enforcement and Administration of Justice recognized the lack of "involvement" throughout the criminal justice system in this country in 1967 to the point of referring to the system as needing "more coordination among its parts" (President's Commission, 1967, p. 12).

The degree of involvement present in any program, institution or system, regardless of size, shape or scope, is never functioning to the degree that it should. Most enlightened correctional administrators would agree that increased involvement of various segments of the criminal justice system is needed and would certainly pay large dividends. Most would also agree that greater involvement between institutional and community-based correctional agencies, both public and private, would prove beneficial. Also, many would sense a need for this same concept to be reflected in the jails, prisons and correctional institutions. In such settings the involvement would be staff-staff and staff-client centered. Here is where the real "crunch" takes place. Here is where it really happens! Here is where true involvement is the most difficult to implement and accept; yet here is where it must begin if the concept is to survive and grow and become meaningful.

The process of involvement is the only really effective method of acquainting the average citizen with realities regarding who the offender is; what his potential and capacity for correction is; and why, for nearly two hundred years, the prison and lately the correctional approach have so grossly failed in their mission to correct and to prevent recidivism. The average citizen needs to realize that offenders do not just vanish from the face of the earth after the prison experience. On the contrary, Glaser (1964) has stated the 99 out of every 100 are eventually released.

An example of high level involvement has been the repeated concern demonstrated by Chief Justice Warren E. Burger in correctional matters. He recently talked about the public reaction to the offender and imprisonment. The Chief Justice called it an attitude of indifference on one hand and impatience on the other and said: "We seem to expect the prisoner to return to society corrected and reasonably ready to earn an honest way in life simply because we have locked him up" (Burger, 1970, p. 126).

During tours of Maryland prisons in 1970 this same Chief Justice walked slowly, talked with both staff and clients (inmates) and truly demonstrated a personal desire to understand the problems, goals, and

characteristics of both the offender (client) and the people who man the system. He impressed both staff and clients of the system with his degree of involvement and indicated many times during his tours that more lawyers and judges should acquaint themselves and involve themselves in correctional matters.

The "spin off" effect of these visits by Chief Justice Burger was very positive. There existed for some time a feeling on the part of staff and client alike that if the Chief Justice of the Supreme Court is becoming involved perhaps there is hope and perhaps we should be a bit more optimistic about the worthwhileness of the situation in which we find ourselves.

The Beginning (?)

However encouraging it may be to have involvement by the Chief Justice, if it is to be truly meaningful and if it is going to survive the many tests, involvement must begin at the staff-staff and staff-client level. And this should be gratifying to most of you because this is where you are most of your working hours. It can happen, and I am sure that to a greater or lesser degree it is happening in most of your institutions. What we need to do is to be always aware of the need to expand the opportunity for a higher level of involvement. The formula for accomplishing this is not all that complex. We in corrections will never be able to afford complacency.

How many institution staff dining rooms today at noon will accommodate psychologists sitting at one table, correctional officers at another, teachers at still another, and top administrative personnel in a private dining room off the main room or at still another table? And we talk about involvement?

There is danger in dealing with extreme examples of non-involvement. Most institutions have more involvement going for them than many of us realize. Call it cooperation or mutual concern or realistic dependency, but it is a base from which to proceed. If this degree of involvement did not exist between departments and individuals within an institution, the operation would simply cease to function, at whatever level of efficiency or inefficiency! Take for example, the reception and diagnostic process--a prime example of staff-staff, staff-client involvement.

Diagnosis and classification of the client means, in essence, understanding him as an individual, interpreting the factors which have caused him to become anti-social, and formulating a program for his correction. Correction of the client can be carried out in practice only by <u>our</u> getting to know the individual as thoroughly as possible--his personality make-up, his strengths and weaknesses, his desires and needs and his habit structure, the influence of his home, neighborhood and school, and how they have interested to influence his behavior.

Securing this vital information during the reception process must of necessity involve, first, the client and then to a lesser or greater degree--dependent on how good or how poor a process happens to be--the educator, the psychologist, the social worker, the judge, the probation officer, the classification counselor, the correctional officer, the doctor, the dentist, and on and on, dependent only on the limitation of the staffing pattern at a given institution. The point is, of course, that these people are presently involved initially with the client and each other in order to handle intake. Now what is needed is to deepen this involvement and to extend it so that it will encompass the entire institutional phase of the correctional process.

Contract Programming

In Cincinnati, Ohio, over one hundred years ago, a group of prison administrators met for the purpose of discussing common problems and founded what is now the American Correctional Association. At that meeting these men set down a "Statement of Twenty-two Principles."

Among the twenty-two were these:

--Reformation, not vindictive suffering, should be the purpose of penal treatment of prisoners.

--The prisoner should be made to realize that his destiny is in his own hands.

--Prison discipline should be such as to gain the will of the prisoner and conserve his self-respect.

--The aim of the prison should be to make industrious free men rather than orderly and obedient prisoners.

Menninger (1966), referring to these principles states: "Can anyone read these amazingly intelligent, high-minded, far visioned 'principles' without a surge of admiration for the humanity and intelligence of our long dead predecessors, and a sigh of regret for the dismal contrast of present practice with these noble ideals? (p. 219)."

Contract programming involves the client from the very beginning. He would know exactly what the contract consists of and would carry considerable responsibility for measuring his own progress. This approach to correction would of necessity involve the parole board and staff representation from different departments in the institution. After initial experimentation, this concept could easily be extended into the free community involving the filed parole agents and various public and private agencies that supply supplementary services.

Community Residential Centers

The involvement of the community cannot be more effectively accomplished than through the establishment of community residential centers.

These centers cannot be successful without plugging into community resources and in turn enabling the community to plug into the correctional process through such facilities.

Initially such centers will of necessity be administered by the institution or correctional system. Ideally it should be a project undertaken jointly by corrections and a public or private, profit or non-profit organization, group or individual. The people from the community should have personal or official ties with the neighborhood in which the residential center is to be located. This is not a necessity but rather a desirable preference.

The future of corrections rests with the community-based concept. This is because if correctional programming is to be successful, it must have the understanding, support, and, yes, involvement of the people from whence the client came and to whom he will return upon release from the criminal justice system. The client of the system needs the community as much as the people of the community need him to become a productive, well-adjusted citizen of the community.

The development of a network of such centers would certainly serve a multi-purpose role. Often judges will say, "If I just had an option, short of commitment to a major state institution, but something more structured than probation." Parole board members echo the same thinking regarding a continuance in an institution vs. parole supervision in the community. The residential center would create options at both ends of the correctional spectrum, and would do so effectively!

Moving a step further with the same concept, probation and parole agents in the community often hesitate to recommend revocation for their clients knowing that once such an action is initiated the probationer or parolee is too often on his way to an over-crowded, under-staffed institution that tends to be an over-kill action. Again, the residential center can be the halfway in orhalfway back facility that is capable of adding structure to a shaky period of adjustment.

Strategies

There are many formal and informal methods of planning and implementing broader, more in-depth involvement. We have touched on the need for the movement to begin on the line in the ranks of the correctional process. The other side of that coin, of course, is for the man at the top, or in the middle, however he sees it, to be in favor and re-enforcing of such change.

In one state the Commissioner of the Department of Corrections created a new classification series and called it "Correctional Counselors." In order for present "Correctional Counselors" to move into the more favorable (significant salary increase) "Correctional Counselor" series, it was necessary for them to successfully take A.A. degree level work in the behavior sciences and express a willingness to work more closely with

the clients as individuals and in groups. The response was very gratifying.

This same Commissioner has invited the new and more experienced employees undergoing this training to spend a day at his side as he meets the challenge of his work day in the central administrative offices or wherever his duties might take him. There have been may "takers" of this offer.

The same concept can be followed in the institution. The educator may spend "a day with the Captain" or with the Sergeant; the psychologist "a day with the educator" or the social worker. Members of the client council may spend "a day with" just about any staff member. Just about any staff member or a member of the client council may spend "a day with" the Warden or Associate Warden. Would this procedure be all that difficult when one really ponders the feasibility?

Client councils or some form of client government in an institution would certainly be an important move toward greater involvement at the client-staff and staff-staff level. Much of the recorded criticism of both client councils and client government in institutions has been the direct result of non-involvement of staff in both activities. There have been instances where staff have actually withdrawn from such attempts on the part of the client group to "get things together." If, however, such activities were properly interpreted to staff and the project could be jointly sponsored and endorsed by staff and client, then either the council or governing body could become splendid vehicles for meaningful involvement.

There are of course the more traditional and much less exciting staff meetings. This method should not at all be discounted because of its more traditional role in the organization. There are staff meetings and then there "are" staff meetings! More frequent, more informal and those that cut across all disciplines in an institution, with periodic attendance of representatives of the client council or governing body, would be a great improvement over what traditionally pass as staff meetings.

Handicaps

The greatest impediment to more meaningful involvement at all rungs of the organizational ladder is the individual staff member or client. Human nature being what it is, the individual tends to resist change. The old adage, "We have met the enemy and he is us" is so true; so true!

Someone said recently that during the many years that he has been in the correctional field he has heard so many theories proposed and so few implemented. Then, of course, we have those beautiful "principles of 1870." The correctional field is hurting for "shakers and doer's." This is why it is a pleasure to be associated with this current effort in adult basic education. I believe that it is a classic example of what the correctional field needs today, not only in education but across the

entire field--an assessment of each function for the purpose of getting more on target relative to the needs of the client of the system.

"Attica" brought corrections into the conversations of millions throughout the world. The public may have been shocked, but perhaps for different reasons. Apparently the truth still "is in the eyes of the beholder." It has been long known that for many offenders, corrections does not correct. Experts within the system are saying outwardly that prison conditions for many clients prevent, rather than assist in their ability to make an accepted adjustment when they are released.

Why has change been so slow? Part of this answer lies with the interest level of each staff person involved in a correctional effort. Part of this answer also lies with the degree of personal commitment that each staff person carries with him to the institution each morning.

Summary

The degree of impact of institutional involvement can make the difference between a client leaving an institution better for the total experience, more independent and able to cope, or as a more dependent person than when he was first committed. The goal of the staff of an institution should be to reduce dependency. The principal method of reducing dependency is involvement of the dependent person throughout the entire correctional process in decision-making. This is the beauty of contrast programming. Everyone possible needs to be involved in the putting together of the "recipe." This is where it happens; this is where it must begin.

Another area that needs exploring is the concept of exchanging staff between institutions and between field services and institutions. There is a warden of a major state institution who began his career as a "guard" in that same institution. Early in his career this man continued his educational efforts and was promoted to a classification counselor position. He took an educational leave of absence, acquired an advanced degree and returned to the same institution as Supervisor of Classification. He moved laterally to a Supervisor's position in Field Services, was promoted to Director of Field Services and later promoted to the Wardenship of the institution in which he began his career service. He may just be the most outstanding Warden in this country today. Why? Because the system permitted and encouraged mobility of its personnel and encouraged personnel to continue their pursuit of knowledge.

We have a long way to travel. But for the first time in many years the focus is on corrections nationally. The President's Conference in Williamsburg, Virginia, in early December of last year is a clear demonstration of the concern and involvement of the federal government. The Safe Streets Act of 1967 and the subsequent putting together of the Law Enforcement Assistance Administration are concrete and solid examples of commitment to the betterment of the field of corrections and the entire criminal justice system.

Correctional staff today are in the early stages of a great adventure. If they are sensitive to the changes taking place in the field around them they can feel a sense of new direction and a fresh impetus. It is difficult to be alive and in the field and not be fully involved!

References

Burger, W. E. No man is an island. American Bar Association Journal, April 1970, 26.

Glaser, D. The effectiveness of a prison and parole system. New York: The Bobbs-Merrill Company, Inc., 1964.

Menninger, K., M. D. The crime of punishment. New York: The Viking Press, 1966.

President's Commission on Law Enforcement and Administration of Justice. The challenge of crime in a free society. Washington: U. S. Government Printing Office, 1967.

THE IMPACT OF INSTITUTIONAL INVOLVEMENT

Louis S. Nelson
California State Prison
San Quentin, California

Introduction

Institution involvement as defined in this paper is the interaction between inmates, staff, and community. The impact of institutional involvement occurs at four levels: First, the impact of inmate - with inmate; second, the impact of inmate with staff; third, the impact of staff with staff; and fourth, the impact of community upon inmate and staff. There can be no doubt that involvement exists, and as it exists, the question arises as to what difference does it make or what is the impact. There are also several possible reactions: First, do nothing; second, resist; third, constructively channel it.

One of the first questions that must be asked about involvement is why is it occurring. Actually, involvement is a sign of our times. We are familiar with many contemporary forms of involvement. Some of these are the current rebellion of youth, expanded civil rights movement, revolutionary political philosophies, alignment with radical groups, and emerging minorities. Out of these contemporary forms come constructive and destructive activities. Some of the constructive activities include the Peace Corps, ecology, urban renewal, transportation, citizen advisory groups, and the birth of new social institutions to deal with stress, suicide, senescene, alcoholism, narcotic addiction, veneral disease, poverty, ignorance, discrimination, crime and delinquency. Some of the destructive activities encompass bombings, strikes, riots, and violence intended to disrupt the orderly operation of the community or institution.

A second consideration to be made concerning involvement is its effects upon established institutions such as prisons, jails, schools, courts, churches, the family, and the individual. The periodic public interest in prisons and prison reform is an example of the effects of involvement.

A third consideration regarding involvement is the underlying beliefs of the people which generate involvement. These beliefs are for the most part culturally determined and might exist either consciously or unconsciously. A belief, peculiar to the people of the estern world is that the prison has a dual function: the protection of society from the offender, and the preparation for re-entry into the community by the offender who is better equipped to participate as a law abiding, productive member of society.

Before a choice can be made as to how the impact of institutional involvement will be met, it is necessary to carefully examine present

forms of involvement and their impact on the total institution. It is obvious this involvement has both positive and negative impact and it is also obvious that the degree of impact depends upon the level at which it occurs.

Inmate/Inmate Impact

The first level of involvement-impact occurs between inmate and inmate. While it must be recognized this involvement begins in the whole pre-incarceration history--peer group, family, school church, juvenile court, and couty jail--for the purposes of this paper the scope will be limited to the prison experience.

The inmate's choice or selection of friends and associates in prison is probably the most important decision he will make. From this choice the positive or negative impact upon his life will, in a large measure, be determined. The rules of the inmate society are usually very clear cut and firm, oftentimes even rigid. Many times it is not possible to change involvement and associates over which he has little or no choice or control. His daily association with other inmates on his work assignment, school, and/or training are examples. At times other than the prime work day--evenings, week-ends, holidays, and at meal times--the inmate's choices of involvement are his alone. Further it must be recognized that his choices of associates and subsequent involvement are affected by current events occurring outside the prison. For example, the minority inmate seeks to identify with other inmates from his ethnic group.

Inside the prison, because of his loneliness and the need to survive, the inmate becomes involved. The form of involvement may be either by continuation of a group participation established prior to incarceration, or by building upon an area of interest. Some examples of the former might include such gangs as neo-Nazi, Black Panthers, New Familia, mafia, or in California such local gangs as Bakersfield, Los Angeles, and El Paso. Some examples of the latter might include continuation of his education or vocation, participation in sports, recreational activities such as the library, chess, dominos, or groups with a specified intent. Included in these groups might be public speaking, Alcoholics Anonymous, workshops in drama, film production, drug abuse, Mensa, ethnic groups and religious activities. Because of inmate pressure or choice the inmate may become involved in prison gambling, narcotics, homosexuality, canteen or cell robbing, or collection agencies.

The impact of involvement chosen by the inmate affects him, the institution, his family and the community. If his choice is a positive one and he follows through, he will be considered for release to the community at an earlier date. If his choice is negative, he will serve a longer incarceration period, will generate problems for the institution, his family and the community, may suffer serious physical injury, or may die in prison as a result of violence.

What factors influence the positive or negative choice are difficult to determine. The law of self-preservation may at times be the deciding factor. Certainly one of the most important factors has to do with the next level of involvement impact.

Inmate/Staff Impact

The second level of involvement-impact occurs between the inmate and staff. This relationship is governed by the dual responsibility of the prison: namely to protect society by confinement of the offender and to assist the offender in his preparation for release to the community. This dual responsibility establishes a system of priorities: control first, then, treatment. This system generates tensions and problems between staff and inmates. In this difficult situation the establishment of effective relationships is governed largely by the staff attitudes toward the inmate. It is one thing to expect the inmate to change his attitude, behaviors, and values; it is quite another thing to assist him.

As previously mentioned, the desire for change by the inmate is expressed in the type of involvement he chooses. If the inmate seeks help from staff he must be receptive to staff effort. On the other hand if staff seeks to help or assist the inmate, staff must be receptive to the inmate's request, problem, or situation. This involvement, either by inmate or staff, cannot be superficial, rather, it must be genuine. If the involvement impact between inmate and staff is superficial and shallow, the frustrations, tensions, and problems continue to mount and usually result in minor or major institutional disturbances. If, on the other hand, the involvement impact is deep and genuine, the inmate progresses and the staff receive job satisfaction and the institution usually runs smooth. Truly it is the amount or degree of personal commitment each staff member carries with him to the prison each day that marks the level of his involvement. The inmate's personal commitment too, marks his level of involvement.

There are some inherent dangers regarding inmate-staff involvement that must be considered. First, the danger of producing a dependent inmate. This might occur when staff does for an inmate what the inmate should do himself. This phenomenon is probably due to staff's failure to realize the inmate is a person and/or staff's failure to realize that the inmate, although he may need help, must achieve for himself. Second, the danger of over-involvement of staff with inmates. This creates in fact a dependent staff which could lose control of the inmate and possibly the institution. Third, the danger of the inmate becoming the target for simplistic solutions, such as more education, religion, or training. Despite these dangers, the ultimate responsibility for establishing positive impact between inmate and staff rests with staff. A meas- of this impact is dependent upon a third level of involvement.

Staff/Staff Impact

The third level of involvement-impact occurs between staff and staff. Just as the system of priorities--control, first, then treatment--generates tensions and problems between staff and inmates, so does it between staff and staff. This tension results in staff isolation and fragmentation of the prison into staff-power groups. The impact of this is readily seen by the inmate who cannot escape. The tragedy of a fragmented prison is felt by staff and inmate with a loss of job satisfaction by staff. The inmate is faced with two choices, either he makes a safe choice to avoid the staff conflicts or he is caught up in the conflict.

Traditionally the prison was designed to isolate the inmate from the community. This design resulted in both isolation of the inmate and the staff and as long as the control function was maintained, there was no demand for change. With the advent of modern penal practices, changes were introduced and for the most part were resisted. It is true of most institutions that change, if it does come at all, comes slow. Change acts as a threat to tradition and the staff power groups built upon this tradition.

The key to reducing this negative involvement-impact is found in two sources. First, the cross-pollenization of control and treatment staffs. This might be accomplished by control staff working in treatment programs and treatment staff in control programs. This concept of staff development usually results in more understanding, tolerance and acceptance of what the other program is doing. The second key to reducing the negative impact at this level and all others is to be found in the inmate/staff involvement with the community.

Inmate/Staff/Community Impact

The fourth level of involvement-impact occurs between the inmates, staff, and community. A certain amount of this involvement is required by law, for example, the parole board, the courts, attorneys, parole officers. The balance of this involvement is generally governed by external or internal regulations.

The inmate's involvement with the community takes many forms. A positive impact in California prisons is the degree of family contact maintained. California research shows that those inmates who maintain firm family contacts have a much higher success rate on parole. This means of course, contact either by correspondence or visits. Even wider impact occurs through contacts with labor/management, religious, educational, recreational, medical, social, and political leaders that come to the prison voluntarily to assist the inmate. Some involvement occurs through the mass media. Certainly with radio, television, books, magazines, newspapers, periodicals, journals, tape, film, records, and reports, much information at the local, county, state, national, and international levels is made readily available to the inmate. A negative impact is the internalizing of community problems within the

institution. A positive impact is the amelioration of the isolation from the community. The belief that increased community involvement is positive is reflected in California by the many community-based correctional centers established, work-furlough programs, temporary passes to the community, and the current emphasis upon the inmates re-entry into the community.

The staff's involvement-impact with the community is first quite simple. He usually lives in the community, and has the typical interests and associations of other community people. There are many possibilities for positive staff impact with the community. Staff has a responsibility to maintain positive public relations in the community. This is, many times, achieved through participation in community affairs. If there is negative conduct in the community by staff, certainly this receives wide attention and results in a negative impact upon the community as well as the prison.

The agent of transition from the prison to the community is the parole agent. His impact upon the prison and community is of major importance. In this terminal involvement the parole agent represents both control and treatment. The impact of the parole agent with the inmate cannot be over-emphasized.

The community involvement-impact with the prison, inmates and staff is unique in that it is the community to which the inmate must return; it is the community that sentenced the inmate to prison, and it is the community that built the prison to incarcerate the inmate. The community truly is a reservoir of assistance, specialized skills and information. That is important only because the community is willing to share these with the prison inmates and staff. Some examples of this type of impact include the regular prison staff, specialized educational/medical contractual staff, consultants, and volunteers. The impact of labor and management coming into the prison to assist the training programs is an example of one type of volunteer assistance.

Community assistance or involvement then falls into three types. First, the assistance given the inmate during incarceration. An example of this is citizen participation in prison programs of religion, education training, and recreation. Second, the assistance given the inmate who is ready for parole or release. An example of this is individual and group participation in job placement efforts, including the provision of hand tools and union membership when necessary. Third, the assistance given the parolee when he is back in the community. Some examples of this citizen participation is found in the efforts of ethnic groups helping the parolee find a job and a place to live. Other examples are found in ex-felon self-help groups, state college and university opportunity programs, and local, county, state and federal agencies with responsibility to help the disadvantaged. The above impacts are in the main positive. James W. L. Park, Associate Warden, San Quentin State Prison, in his paper on prison reform submitted to the Committee on the Judiciary, United Stats House of Representatives, San Francisco, California on October 25, 1971 says:

American prisons are making one of their periodic appearances on the public stage, a phenomena that occurs at about 30-year intervals. This wave of public interest, like those in generations past, will undoubtedly result in some increase in public understanding and in some progress in the art of working with those who fail to cope constructively with this complex society. Commendably, a broad range of the public is involved, some of whom are well-intentioned and well-informed, some of whom are well-intentioned and poorly informed, and regretably there are some who are neither. Those in the latter category create serious problems for those who work for constructive change in our system of criminal justice.

Some community impacts are negative and are disruptive to the normal operations of the prison. These impacts cause further isolation between inmate/inmate, inmate/staff, staff/staff, and inmate/staff/community involvements. For example, at San Quentin, on two occasions in 1968, a new style of prison revolt was planned and activated by a mixed community group of ex-prisoners, students, academicians, and new left adherents. These community generated revolts pointed out, possibly for the first time, that community people could communicate and plan with prisoners to disrupt or terminate normal prison operations. In August of 1968 a new approach was used by community people in which the normal prison routine was disrupted only during the weekend leisure time activities.

As noted above, the current public interest in prisons and prison reform has provided a spring board for many community activities. These people with their assorted revolutionary political philosophies and other mis-information attempt to gain admittance to the prison by the use of many guises and pretenses, espousing concern for the inmate and a "willingness" to help. This impact causes the inmate to become emotionally unstable, and to become violent, unrealistic, and if the impact is widespread, the results could be aimless killing, injury, and severe destruction of property. The end-results of this impact for the inmate usually means more time to serve, loss of privileges, isolation, or segregation. Staff experience a sense of frustration and futility after a major disruption and question why it was allowed to occur. Staff may over-react after a major disruption and their distrust of the community is reflected in two ways. First a limitation is placed upon community access to the prison, and second, a tight ring of security is placed over the internal operations of the prison.

All of these levels of involvement-impact exist in any prison and cannot be ignored. Every inmate and staff in a prison is affected by involvement and cannot escape his responsibility to the total prison. If positive involvement-impact can cause a prison to run smoothly and achieve its objectives, conversely, negative involvement-impact cause a prison to shut-down and fail to achieve its objectives. The critical problem is to develop approaches for achieving positive involvement-impact.

Approaches for Achieving Positive Involvement-Impact

No simple set of rules or procedures can guarantee positive impact in a prison setting. There are however, some general principles to be considered in developing approaches leading to positive involvement-impact. These principles affect each level.

Inmate/Inmate and Inmate/Staff Impact

A major portion of inmate time and energy should be channeled into productive activities. The provision by the staff of effective education, training, counseling, industrial, work, recreational/physical education, music, art, crafts, hobbies, library, drama, religion, therapy, medical, dental, food, maintenance, mail and visiting, household, and pre-release programs will provide for constructive use of a major portion of inmate energies.

Provision for the inmate to have more say about how the prison is operated is not a new concept but remains as an effective management tool for channeling inmate involvement. The use of advisory councils representing men in all areas of the prison is an example.

Opportunity for the inmate to develop alternative programs to fit his needs should be readily made available. Some examples are the many types of self-help groups appearing on the prison scene.

A reduction of inmate compaction through design and construction of smaller 400 to 600 man prisons may contribute to lessening the tensions, problems and complexities of the larger walled prison. This also provides for a lesser possibility of negative impact.

The inmate should be allowed to have some say in the decisions which affect his program during incarceration and preparation for return to the community. When an inmate appears before a pontifical classification committee, he seldom has much to say about his program. Institutional needs usually have priority and assignments to food service and the laundry or to some clerical function or to a grounds crew usually occur. If the inmate presses his request for a specific program, chances are staff will resist and he will be un-assigned or placed in the program <u>staff feel</u> is best for him.

Human behavior is complex and unpredictable. Because it is not known when an inmate might choose to do something constructive with his life, it is essential that all avenues for program implementation and change in the prison remain accessible. It must not be inferred that inmates should be given latitude to change programs at their slightest whim. In some prisons it is easier for the inmate to see and talk to the warden that it is his counselor.

Positive involvement by the inmate should be recognized, encouraged, and rewarded. Some examples are the provision of special events involving

the inmate/staff/family/community such as: art shows, music festivals, drama, sports events, events of significance to all cultures, beliefs, and religious activities, graduations, field days, variety shows, outside entertainment, and Mother's Day. These events are most needed during the times of the year when the inmate and his family celebrated events together, such as: birthdays, Thanksgiving, Christmas, New Year's, and anniversaries.

The implementation of these principles depend upon the quantity and quality of inmate/staff involvement.

Staff/Staff Impact

A prison, today, demands stable, honest, energetic, aware, observant, and knowledgeable staff, carefully recruited, screened and trained and representative of the inmate ethnic balance. Staff must be stable, tolerant, and able to work calmly with inmates and other staff. Honesty and integrity are essential attributes in a prison and are equated with staff and inmate safety and the safe operation of a prison. Staff must have the energy to work with problem people rather than shuffle these people to someone else. Staff must be aware of what is going on inside the prison and especially in their area of responsibility. By this is meant an immediate receptiveness to sudden changes in inmate climate, attitudes, and feelings with the ability to remain calm and observant and not overact.

Another type of awareness necessary is that awareness of community events, trends, problems, resources, and feelings. A common hazard in prison is the exclusion of what is going on in their ship, area, or location. This lack of being observant poses danger to the well-being of inmates and staff. A knowledgeable staff knows the operation of its area of responsibility and further has a grasp of how its operation fits into the total prison operation. Each staff member also realizes the need for continuing education and training mandated by the immediate times and by the twenty-first century.

The development of staff/staff impact involvement to control and assist the inmate is of top priority. Needless to say, staff meeting, employee counseling, and in-service training do not guarantee desired results. A review of the literature reveals little study or research in this vital area. The major problem as stated earlier, is the fragmentation of staff as a result of the dual responsibilities of the total prison. There appears to be no easy or simplistic answer to this long-existent problem. Much staff fragmentation could be avoided if the staff immediately concerned would settle or attempt to settle, operational problems at their level. Usually, one or both of the staff refuse to discuss the matter and simply refer it to their supervisor or department head. He in turn feels a compulsion to support his subordinate and usually he will not attempt to set up a meeting between the two staff concerned. It is easier to pass a problem to your supervisor and let him make the decision. The department head refers it to the division head,

and too many problems wind up on the warden's desk that, in fact, could and should have been resolved by line staff.

The impact of staff isolation and resistance to change usually can be effectively overcome by the position taken by the warden. As an example regarding racial prejudice and racial problems the warden might call all his staff together and discuss the differences between the various ethnic cultures and the importance of history and cultural factors to these groups. He concludes by stating it is his desire that these groups shall be allowed to organize and function in order that they may achieve their goals through operation within approved guidelines. He is saying he supports these activities as long as they operate within approved limits and guidelines and that he expects the staff to assist. Another effective way to combat resistance to change is the development of a climate wherein inmate or staff can prepare suggestions for change and a procedure exists whereby these suggestions receive consideration and response from top staff. The transfer in of staff from other prisons and the employment of new staff help to breakdown staff-isolation and resistance to change. In areas which may have only one institution, staff may assume new or trade jobs for broadening their base of experience or for other self-development.

Community Impact

The positive impact of healthy community and public relationships has been extensively covered previously. The people we authorize to enter our prisons from the community do not always represent what they claim, nor do some of these people enter prison for their stated purposes. There appears to be no easy way to rechannel these people to a positive impact. This means that these people should not be allowed in the prison. Staff is responsible for the type of community people approved to be involved in prison activities and with inmates. Staff then has the responsibility to know what the true affiliation of community people or groups is, and the specific purpose of their coming. In this day of prurient interest in prisoners, jails and prisons, and of subsequent reform, it behooves every prison to maintain an up-to-date list of all radical, militant, revolutionary, subversive activists from all areas of the community and to deny these people entrance to the prison. There is no possible justification for dangerous, disruptive, community people and groups to be allowed inside a prison. Fortunately, such people constitute a small segment of the community and it is that larger section of productive, law-abiding citizens that offers positive community-involvement impact.

Because the prison is established by the community and seeks to return men to the community, every means possible must be used to inform, acquaint, and involve the community with the prison. The public information functions of the prison must be aggressive and not limit their efforts to passive explanations and reports of negative events. The appointment of a full-time information officer of high rank is one effective means to accomplish this. More emphasis must be placed upon the

positive achievements of inmates and staff.

Conclusions and Summary

The phenomena of involvement and their subsequent impact on the prison are complex and cannot be treated in a simplistic or traditional way. The way involvement-impact is handled now or will be handled in the future will effect the lives of the inmate and staff and the very existence of the prison as we know it as a viable social institution. The tendency of some staff to discount the impact of involvement as a passing fad and to await the return to "normalcy" is certainly unwise and dangerous. Involvement is here, today, and we cannot resist or ignore it. Our only choice is to attempt to constructively channel it for the benefit of the inmate, staff, prison, and community. As Broom and Selznick (1968) predict:

> The fluid conditions of a rapidly changing society are conducive to collective behavior. Active protests sometimes leading to violence occur when rising aspirations are not met by speedy and visible fulfillment. Religious sects emerge when established churches fail to respond to the needs of new life situations. Swift alternations of war and peace bring widespread shifts in public opinion. Collective behavior reflects underlying changes, and in responding to them it creates new perspectives, new lines of action, and new institutions (p. 254).

References

Broom, L., & Selznick, P. Sociology (4th ed.). New York: Harper and Row, 1968.

Glasser, W. The civilized identity society: Man enters phase four. Saturday Review, February 19, 1972, pp. 26-31.

Johnson, A. The sociology of punishment and correction (2nd ed.). New York: John Wiley and Sons, 1970.

President's Commission on Law Enforcement and Administration of Justice. Task force report: Corrections. Washington: U. S. Government Printing Office, 1967.

Skolnick, J. The politics of protest. Washington: U. S. Government Printing Office, 1971.

THE IMPACT OF INSTITUTIONAL INVOLVEMENT

Don R. Erickson
South Dakota State Penitentiary
Sioux Falls, South Dakota

Contrary to the public's outcry, educators, sociologists, and academic penologists do not have a lock on progress in changing individuals, curtailing recidivism, and reducing penal populations. In spite of restricted budgets, aged facilities, and failure, ringed clientele, the "keepers" of institutions have been innovative, too. However, their innovation has been tempered with experience. For example, approximately 90 percent of the inmate population has dropped out of school before obtaining a high school diploma. The answer seems then to be to instigate a strong educational plan--and more specifically adult basic education. But one program cannot do the entire job.

> If we believe, and demonstrate our belief by what we budget (an accurate barometer of executive interest), that the men in our jails are going to reorganize their lives by the help of the team of psychiatry and education only, then we are going to return to the street better adjusted and better educated felons, but felons none the less (Glaser, 1971).

A total program includes security, treatment, prison industries, institutional maintenance, and supportive services.

What then, does the penal practitioner have going for him that will make his program more successful than those that have been already tried on society's failures? HE HAS SECURITY AND A SEVERELY CONTROLLED ENVIRONMENT. He does not have outside influence such as families, friends, drugs or automobiles, to hamper his efforts. As this administrator plans his program, he includes security--a valuable resource in itself and also one that can unite a more effective supportive staff if used properly. But one must not forget that an inmate is handicapped by the culture he brings with him.

Importance of Involvement

Immediate Benefits

Today an administrator realizes that the walls of prisons are being modified. Rehabilitation is not a commodity handed to the inmate upon release and carried by him into the community where all ends well. There must be pre-planned and carefully instigated involvement of institutional personnel and community agencies and individuals.

Community involvement in penal programs can result in certain immediate benefits. Volunteer time can increase the manpower available to

the warden. New ideas are introduced. The public relations image of a prison can be improved as people develop a greater familiarity with its operation. The public may become more sympathetic toward a tax program to support the institution when they see that "something IS being done," and there ARE some problems in running an institution.

But this tie to the community is not without its disadvantages. The administration of volunteer help is time-consuming. It often means putting up with ineffectual help. Judgments are often made on an emotional basis which can result in poor decisions. The community personnel tend to start but not carry through on programs. The "excite the troops." The controlling of contraband--a purely mechanical operation--is made more difficult.

Long-range Benefits

The long-range benefits derived from inter-involvement of community agencies and institutional personnel are difficult if not impossible to evaluate. Hopefully, however, this working together will reduce recidivism, eliminate some of the public misconceptions of penal institutions, and insure greater responsiveness to the needs of society.

Nature of Involvement

Internal and External Involvement

The nature of this involvement at the South Dakota State Penitentiary can be grouped along these lines: internal programs, internal programs utilizing community resources, and external programs.

Internal Programs. Internal programs include those completely run by prison personnel which take place "inside the walls." An example of this would be a prison industry such as the making of license plates.

Internal Programs Utilizing Community Resources. A second classification of penitentiary programs is internal programs utilizing community resources. Here the people of the community bring their talents into play "inside the walls." The State Employment Office and Vocational Rehabilitation Office send representatives to the prison to aid the inmate in seeking employment or training upon release. The Indian population is counselled by officials from the Bureau of Indian Affairs and the United Sioux Tribes. Services for the visually impaired is offered to those needing care.

Operation Stay-Out offers a series of pre-release counselling sessions for the inmates. The presentations are handled by people of the community on topics varying from health care to money management to good

grooming. These meetings are followed by group discussions which are led by the institution's educational staff.

A local college is providing in-service training for prison personnel and the institution is providing the setting for an internship of a Master's Degree candidate.

Volunteers aid the institution in a variety of ways: (1) JayCees, (2) Alcoholic Anonymous, (3) arts and crafts classes, (4) community athletic contests, (5) church-affiliated meetings, (6) a dramatic troupe, and (7) various entertainment groups.

External Programs. A third type of program is the external program. This would include times when the inmate or staff member leaves the institution for involvement in the community.

A group of inmate speakers--calling themselves "Operation Pitfall"--leave the prison almost daily to meet with students, parents and interested people to tell of their rocky road to the South Dakota State Penitentiary. They do this with the idea of stimulating youth to examine their own paths and potential destinations. The speakers provide positive publicity for the institution and raise the image of "the con." Work Release is a plan to place inmates into a job in the community six months before their release date.

Staff members attend courses at the local colleges to increase their own educational status and their effectiveness in dealing with the prison population.

Functioning Effectively

The involvement of institutional personnel and the community agencies and individuals can become an extensive operation. But in order for its functioning to be an effective part of the correctional system certain questions must be satisfactorily answered:

(1) Do the programs fit the objectives of the institution?
(2) Who will pay for the program?
(3) What supervision will be needed to carry out the programs?

Achieving Maximum Involvement

Strategies for Dovetailing Program

In order to achieve maximum involvement, certain strategies for dovetailing programs and activities must be considered. A program must fit the schemata of the institution. Those that do not must be refused. For example, a MDTA sponsored training program offers pay exorbitantly

above the standards of the prison--an upholsterer receives 80¢ a day at the South Dakota State Penitentiary while one under MDTA sponsorship receives $2.00 a day. Some things cannot be changed or compromised. Yet both the "insiders" and the "outsiders" must show some flexibility. Because something has not been tried it should not be discredited. Young people below high school age are not permitted in the South Dakota Penitentiary, but for a tri-state tournament the penitentiary's gym is used and inmates do the officiating. Both "insiders" and "outsiders" watch.

The central person must coordinate the total agenda. This will also improve the quality of the community ventures and keep them in line with the institution's philosophy. This central person should also be aware of the best of the community's resources and seek high quality persons to enrich the activities brought to the inmates.

Increased community involvement also creates a need for more staff orientation and in-service training. Security personnel need to see the short and long-term benefits of such activities in relationship to a possible increase in work load. They need to be aided in seeing their role in helping the volunteer succeed.

Obstacles and Hurdles

Certain hurdles must be overcome before the benefits of these kinds of rehabilitation services are seen. Security must be an over-riding factor. Always to be considered is the amount of guard time needed to carry out an idea. For example, a drama group wishes to produce a play inside a prison. How much time is involved in supervising rehearsals? Will practice take place during the working day or during the evening recreation period?

The emotional reaction on the part of the staff to these extra activities needs to be considered. It will mean an additional work load. What is their general feeling about the role of rehabilitation in incarceration? Is retribution prominent in their thinking?

One hurdle often faced when dealing with interagency operations is that of political intrigue or jealousies; for example, a political group may not allocate money for an institution because they fear that the other party, holding offices, may look good if the programs flourish. The Vocational Rehabilitation people may become hung-up on statistical data relating to the placing of "ex-cons," and as a result refuse to accept large numbers of inmates because their chances of success are much lower.

Summary

Penitentiaries are no longer islands unto themselves. The community is becoming a factor in the rehabilitative activities of correctional institutions. If leadership, support, and behavioral objectives are

provided by the administration, this community involvement can become a positive force. If the administration ignores the issue, taking the good with the bad, it must be prepared to deal with problems. If the first course is chosen then the administration must plan for staff orientation and volunteer supervision. It has been said that every hour of volunteer time can take one hour of staff time.

The mode of the day is community-based corrections and tight budgets. It is not always possible to involve the community, but community involvement is a way to expand programs and extend the inmate into the outside world that he will some day face alone. With all its advantages such a program is not for the faint of heart. The more flexible the program the more decisions that must be made--and the greater the chance for error. Even fatal error.

Reference

Glaser, D. Politicalization of prisoners: A new challenge to American penology. American Journal of Correction, 1971, XXXIII, 6-9.

THE IMPACT OF INSTITUTIONAL INVOLVEMENT

John O. Boone
Department of Corrections
Boston, Massachusetts

Traditional programs that involved the community in prison processes have not paid off very well for the correctional client. Most of the men in prison today have past records in criminal justice agencies, and they can also boast of flunking out of many other institutions, especially the public schools. These characteristics reinforce the value of educational programs in correctional institutions. Failure in the community is attributable in a great sense to the inadequacy of important community agencies and institutions. Therefore, in the very beginning of this paper two important questions must be raised. If the community has failed to provide adequate resources for its citizens in the community, will it provide anything different in correctional institutions? And, should programs of quality be provided for institutionalized men and women, will they be motivated to take advantage of the opportunities in substantial numbers? After the Distric of Columbia Department of Corrections initiated a college program that enabled correctional clients to pursue a college degree involving the freshman and sophomore years at the institution, continuation through busing to Federal City College, and eventually assignment to a halfway house, the number of students in the high school program doubled.

Undoubtedly, there are some benefits in involving interested communities and individuals in the institution: community involvement is a tool for public education; it is an instrument for motivating people in providing post-release assistance; but it has never been demonstrated to have any real impact on correctional policy or on the rigors of institutional living. Consequently our goal should not be directed at bringing the community into the institution, but rather to bring the institution into the community.

Civilizations down through the ages have not developed many new means for dealing with prisoners, including slaves. Economic considerations would over-ride all others in determining the plight of the prisoner or slave. In the main, we will find that coercion and punishment has been the strategy for achieving a maximum of production with a minimum of expenditure of resources. These strategies have resulted in multiple plots involving conflict, fear, and escapism. We are face to face with this dilemma in the nation's penal institutions today. We have not motivated our clients. We can peruse learning theory for some answers. Most authorities say learning requires activity and goal-seeking behavior. A recent report (Bellows, Gilson, and Odiorne, 1962) indicates a satisfied, quiescent person does not learn. This stipulation should compel us to reexamine our helping techniques. We cannot limit goals to the prison walls--nor to empty rhetorical promises. They must be more valid--honest--than the shallow promises of yesterday. Dishonest decisions will no

longer pay as we deal with the severely alienated, socially paranoid individuals that fill criminal justice rosters today.

Now, increasingly, corrections will be required to "rehabilitate" offenders. Many court cases are addressed to this problem. Recently the Pautuxent decision stipulated among other things that offenders have a right to rehabilitation resources. Pautuxent is the institution for the criminally insane for the state of Maryland. In a recent speech Chief Judge David L. Bazelon, of the United States Court of Appeals, dismayed a group of psychologists when he raised the question, "Psychologists in Corrections--Are They Doing Good For the Offenders or Well for Themselves?" We have raised similar questions among our professionals. The same, somewhat moral issue can be raised with most of us who work in corrections, and many other agencies for that matter. But we seem to have a death wish. In spite of the overwhelming amount of evidence that indicates our methods have failed, we continue to hang onto our archaic clinical approaches. Our strategies seldom refer to the ramifications of a deranged society. We are still secure in the mythical nature of our disciplines. Strongly believing that we are still lonely martyrs in a harsh custodial culture, we cannot perceive our partnership in a correctional process that has done little other than mark time now for many years.

Judge Bazelon (The Washington Post, January 29, 1972) stated that violent crime is an inevitable by-product of our society's social and economic structure, and not the product of sick people who can be treated by doctors. He said:

> Your discipline assumes, I think, that aberrant behavior is the product of sickness, and it brings to bear on the problem, a medical or therapeutic model. That model assumes a white, middle class, nonconforming subject whose antisocial behavior is attributable to mental disturbance.

We endeavored to build a new rehabilitation strategy at the District of Columbia's Lorton Correctional Complex. We took into consideration the fact that traditional concepts of rehabilitation assume that all is well with the community and that all the inmate needs to do is to pull himself up by his boot straps. We decided to set this myth aside and more closely examine the opportunities in the community.

Perhaps our ability at Lorton to perceive these problems more clearly stems from the nature of our prison population which is 99 percent black. This is not meant to imply that disadvantaged whites are not victims of the same social problems in other jurisdictions. Judge Bazelon (Washington Post, January 29, 1972) observed that violent (street) crime is committed by persons who are clearly at the bottom of society's barrel. He said:

> poor, black offenders are not necessarily sick, they may be merely responding to an environment that has impoverished them, humiliated them and embittered them. Will group therapy help a

black teenager who steals cars and peddles drugs, and who will be tossed at the end of his rehabilitation right back into the environment that nurtured him.

I shudder to think that the war on drugs launched by the President (The Washington Post, January 29, 1972) could serve merely to introduce even more poor and disadvantaged persons into correctional institutions, and not get at big operators at all, thus adding to the problem of crime on the street. If it is expected that this will be the end result, we believe that the President would want to reexamine the target. He has said, "No institution within our society has a record which presents such a conclusive case of failure as does our prison system (The Washington Post, January 29, 1972)." The ominousness of this development is conceived in the fact that prisons make criminals. Norman Carlson observes, "Anyone not a criminal will be one when he gets out of jail (The Washington Post, January 29, 1972)."

This fear is not to imply that drug pushers should not be punished. However, since most of them are addicted to the use of narcotic drugs, the strategy should include carefully planned programs for the treatment of users through some alternatives to incarceration. Judge Bazelon suggested an interesting alternative when he implied that we are wasting money on incarceration. He observed that the John F. Kennedy Federal Youth Facility at Morgantown, West Virginia acknowledged several years ago spending $13,000 per year on each inmate. Judge Bazelon suggested that it that it would be worthwhile to try letting each inmate out of the institution and giving each one of them $13,000 (The Washington Post, January 29, 1972). Ironically, it cost us approximately $7,000 per year to keep one man in prison for one year, yet at the Lorton Correctional Complex we can give him no more than $50 and a cheap suit upon release.

So, in a great sense, we have for years introduced men into prison, it seems, into both abnormal and inadequate situations, with the expectation that he will eventually return to his original environment in much better shape than he was in before. This has been a disastrous approach to corrections. In studying the processes of prison-community involvement, we must keep in mind how one learns as well as the nature of the prison culture. It is clear that prisoners may learn more from each other than from any other source, and, they largely influence what can take place in the prison community.

Importance of Involvement of Institutional and Community Personnel

All who work in prison environments--personnel and inmates--literally serve time. Both are at the same time the kept and the keepers. One group could hardly exist without the cooperation of the other in most of the nation's prisons. In fact, there are two prison cultures married as a result of a fragmented criminal justice system made up of disjointed collections of buildings and jurisdictions. The ways and manners of the community immediately surrounding the prison are reflected in the prison's

rules, regulations and treatment methods, rather than the ways and manners of the communities and sub-cultures from which the offenders come. And now we see conflict replacing the accommodation that prevailed for so long in the social process or imprisonment. The interdependence of the keepers and the kept is weakened. Likewise, the contracts, often involving flagrant corruption and oppression on all sides, cannot much longer prevail. Even if decision-makers are able to maintain traditional relationships by police control, current decisions in the courts--particularly those calling for rehabilitation, health and decency in the prison--could make long term imprisonment prohibitive, accelerating the trend toward community corrections.

In the present embryonic stage of community correctional programs, the role of the community is crucial. Let us consider some of the immediate benefits of turning correctional institutions toward the community. The involvement of institutional personnel, and community agencies and individuals will tend to reduce internal conflict and attributes to an enthusiastic, hopeful prison environment.

We implemented community outreach programs at the Lorton Correctional Complex a little more than twelve months ago. We encouraged the use of classic organizational models for the purpose of self-help groups and community orientation (inside and outside the prison community). All kinds of models, such as Junior Chamber of Commerce, YMCA, other religions, and black awareness, are used for the purpose of helping members use themselves constructively. The groups usually have outside counterparts that are able to relate to the prison groups in a viable manner. The number of such groups was increased from five that involved less than 100 inmates, to more than 30 involving more than 800 inmates in constructive endeavors with the primary objective of community development and social problem solving. The nature of this responsible thrust has literally kept the lid on at Lorton, where some very poor planning has resulted in overcrowding and severely unhealthy conditions of living at the prison complex. The District of Columbia was given a strengthened law enforcement and judicial process, and nothing for corrections. Ironically, a new council member who had difficulty accepting our community outreach programs has had a recent change in attitude and has acknowledged the value of programs that promote "self-regulation." He said:

> the establishment of more prison programs to encourage self regulation of the inmates. Obviously, in an institution of seventeen hundred men, seventy guards won't make for very much security. What will provide for security is a program of men regulating themselves (The Washington Post, January 22, 1972).

Most probably the councilman does not yet call for the kind of innovative community programs that will turn the prison toward the community. His emphasis is still probably along the lines of reforming the prisons, not tearing them down.

One of the first self-help endeavors at the Lorton Correctional Complex involved an organization of inmates, their relatives, and a community

civic association with business enterprises. This resulted in the establishment of a valuable training program in retail grocery clerical work and management. As a result of this joint venture, six men are now employed in trustworthy positions in major food retail stores.

In summary then, immediate benefits derived from involving our prison complex with the community are the promotion of enhanced moral, and additional advocates for improved resources and prison reform. The long-range benefits include both crime reduction and criminal justice. Obviously, the current practice of warehousing men in institutions has resulted in the production of instruments of costly, painful crime, instead of producing changed individuals.

It is right for the affluent to be able to negotiate another chance and for those in his personal environment to go all the way to divert loved ones in the criminal justice system. However, society must assure the same opportunity for the poor if we ever hope to achieve egalitarianism, and cope with the bitter, hateful, acting-out behavior that plagues the inner city at the present time.

The community has not yet appreciated the devastating affect of indifference and apathy; an attitude that promotes corruption and impedes progress in the penal system. It continues to sanction the caging of men that serves the purposes of a criminal culture. The token educational, vocational, social and psychological opportunities in prisons are logically of a poorer quality than the inadequate public facilities that they had dropped out of, yet they are expected to learn their way out of a prison environment where most of what is taught is criminality. The process is like placing a man in a jungle that is infested with danger and disease with the expectation that he will come out unblemished.

A recent newspaper article stated,

> Human prisoners in the United States are more carelessly handled than animals in our zoos which have more space and more "human" care. Eighty percent of all prison guards in the country are paid less than $8,000; all keepers of animals in the National Zoo in Washington are paid between $84,000 and $91,000 (The Washington Post, January 29, 1972).

The community must realize that to cage men in prison literally means turning out wild men eventually. The process of dealing with crime is so impersonal that we live with this costly approach because the problem does not touch us personally. Therefore, it is important for us to take time in this paper to discuss the cost of crime.

To provide minimum standards of health and decency in prison the cost is in the vicinity of $7,000 a year but the cost of imprisonment is much greater. We have already suggested that a prisoner learns more from his peers than he does from his keepers. This means simply that he acquires knowledge and skills of a varied nature that can be used against the community to which he must return. If he lived in the ghetto he will

return to the ghetto and do his thing better in the ghetto. This means painful social cost paid out on unsafe streets. Also, a prisoner leaves a family as charges of the community. When he is sentenced to prison on multiple occasions, his wife is sentenced to welfare and quite often to delinquency and social deviance or other means of surviving without her husband. Children often become disturbed and are candidates for the criminal justice rolls. They make up costly social agency caseloads. In many states, once a man goes to prison he cannot be employed by the state, and he is discriminated against as he seeks employment in private industry. Ex-offenders are the true hardcore unemployed who are the last hired and the first fired. We send them to prison with the expectation that they will learn to become loyal citizens, yet we refuse to let them participate in the democratic processes as voters, workers, parents and advocates of the American ideal. We are talking about more than 200,000 adults in federal and state prisons, and possible 200 people in pre-trial lock-up situations. We know that these figures represent only the proverbial tip of the iceberg of crime.

Most important is the possibility that in the long run, prison-community involvement could mean a more intelligent approach in solving the social problem of crime and delinquency. It demands involvement of prison personnel, including prison residents, relatives, individual and group volunteers, other agencies and institutions, business, and commercial and industrial groups that will carve out real opportunities and a multiphasic approach to corrections.

The involvement of institutional personnel, community agencies, and individuals should be based upon long-range objectives and correctional philosophy. For example, an objective addressed to the task of making men feel alright in prison--pacification, in a sense--would dictate a different kind of involvement that would revolutionary correctional philosophy with objectives that would eventually reorder most of the correctional programs in the community. The former would make a great demand upon institutional security resources. The latter, of course, would call for drastic changes in public policy, and would involve programs for improved public understanding of the nature of the problem.

In looking at the nature of involvement, certain crucial issues should be kept in mind. The preferred direction should be the development of alternatives to imprisonment, such as:

1. Compensation for the victims, tied in with enabling offenders to continue to lend some support to their families, pay some taxes, and reduce the cost of their own subsistance at all levels in the correctional process.

2. Provide enhanced educational and vocational training opportunities; new careers for offenders, especially in corrections, would be a demonstration of the agency's confidence in its own product.

3. Involve private enterprise for the reintegration of the truly hardcore unemployed.

With these issues serving as a frame of reference, it is helpful for us to talk more about effective policies, procedures, and resource utilization, than it is for us to talk about an effective correctional system as it is set today. Corrections is undergoing considerable change, its time has arrived. What is called for is a high degree of mutuality, first among co-workers, then extended into the community where all relevant forces should join together in program planning to pursue an effective correctional system.

At the present time in correctional institutions, there is a dichotomy between professionals and non-professionals. This is based on philosophical differences. It is a wasteful situation that administrators can no longer tolerate. At the Lorton Correctional Complex, where ambitious community outreach programs prevail, such programs were continually threatened as rigid security forces were seldom willing to cooperate and facilitate innovative programs. Defensive stances were taken on all sides. We were able to move ahead in spite of these handicaps because of an unusually high degree of integrity among the men who developed and nurtured their own self-help or community out-reach programs. However, with a greater degree of mutuality we could have made better use of our limited resources and the results would have been much more remarkable.

Achieving Maximum Involvement

Achieving maximum involvement of prison and community personnel requires flexibility that most correctional systems do not have at the present, especially in the use of resources. Considerations of community sanction, interagency cooperation, and leadership--internally and on the outside--loom as most important. These stipulations imply obstacles and hurdles that work against the gamut of prerequisites to effective prison-community relations.

Summary and Conclusions

We see the enhancement of functional interrelationships among prison personnel--including residents of penal institutions--and outsiders, as the basic requirement in revolutionizing corrections, and establishing it in the community as a means of providing real opportunities for the reintegration of offenders into the community. Such a system will reduce conflict, facilitate cooperation, and motivate the poor and otherwise disadvantaged who are trapped in the revolving doors that we provide today in the criminal justice processes. Long-range objectives concern reduced cost--financial and social--and real opportunity for the poor and the inept to negotiate in the system in the same manner of those who are diverted as a result of influences of money and/or good family background.

This kind of involvement will promote mutuality of objectives in the system, will facilitate better use of manpower and budgets, will result in changes in outdated policies of repression and police control. This mandate faces multiple obstacles and requires very strong leadership,

inside and outside of the correctional system.

Community involvement that is directed toward the institution and which seeks objectives of pacification is doomed to eventual failure. Viable involvement directed toward the ideal of participatory management in correctional systems that can be gradually integrated with other systems for the provision of community health and welfare is an overall goal which holds real promise of overcoming the social problem of crime on the streets.

References

Bellows, R., Gilson, T., & Odiorne, G. Executive skills. Englewood Cliffs: Prentice-Hall, 1962.

The Washington Post, January 22, 1972.

The Washington Post, January 29, 1972.

THE IMPACT OF INSTITUTIONAL INVOLVEMENT

Jerald D. Parkinson
State Board of Charities and Corrections
Pierre, South Dakota

Correctional administrators have finally come to recognize the great need for better rehabilitative programs within the correctional institutions throughout the country. They now realize that while there are those whose behavioral patterns and records clearly show that they have no intention or hope of being rehabilitated, there are the majority who are sincere in making amends by restoring themselves to society with changed attitudes and habits.

How far does society's responsibility extend for recommending a rehabilitation program for all felony offenders, and is the process of effecting changes in inmates a lost cause? There is no question that the educational personnel and job training supervisors are dealing with a different type student and person. One whose lack of trustworthiness and learning capacity requires moresupervision, personal attention and stabilization. This, however, does not nullify the attempt at rehabilitation for society's protection.

If the recidivism rate is to be reduced, the programs in connection with the school, vocational and job training must be timed to assist in the preparation of an inmate to hold a job when he is released. The continuity of a rehabilitation program must be considered from the standpoint of the average reformatory and prison confinement, and as they are comparatively short periods, many interferences should be expected, but should not be regarded as a lost cause. Time and research can measure results with those released.

Penal institutions cannot go so heavy on education and job training as to lose sight of security. It must be carefully recognized that the personnel workers of the institution are charged first with the security of the inmates in relation to society, and secondly, with assisting wherever and whenever possible in the rehabilitation of those confined. The implications of rehabilitation go beyond the restoration of the individual to his former position or status, to his renewal or remaking as a contributor to the better way of life that is so cherished in our society and is so well guarded by rules, regulations, and laws.

We must first recognize that most present day institutional personnel are concerned with rehabilitation after security is assured and few say that there is no room for improvement or the up-grading of those confined. How this improvement is taking place and being conducted can be discerned by the studies of the educational, vocational and job training programs being carried out by the educational staff under the supervision of the warden or superintendent.

With security as the first priority within an institution, where do we go from here in the development of adult basic education programs in corrections? This program of adult basic education becomes the communicating factor that precedes worthwhile academic education and vocational training. Since a great majority of the prisoners we receive have little or no education and since it is a proven fact that about 99 percent of confined convicts must sooner or later face society again on the outside, we see that for these inmates adult basic education, through good academic and vocational programs, properly accepted by institutional staff and communities, is society's best defense against a return by these men to prison life.

Importance of Involvement of Institutional Personnel and Community Agencies and Individuals

The hub of the institutional involvement wheel rests within the educational system or school. The coordination of all programs throughout the institution and community must come from educational staff with the approval and support of the administration. Observance of existing educational programs present problems to present educational supervisory staff and to those who would suggest or recommend changes.

Involved in these problems are suggestions for improvement that will assist those continuing their education during their confinement and also strengthen the assurance that those paroled or released will not be returnees but individuals who will be prepared educationally to find a satisfying and rewarding vocation, mature emotionally, and make a contribution to society.

Without necessary changes in thinking of institutional personnel, of better planned programs, of greater involvement by communities and individuals, and more sincere motivation on the part of inmates, this lack of job skills and subsequent unemployment lead those paroled or released back into trouble and prison. Emphasis should be aimed at developing comprehensive vocational guidance and skills, remedial education and job training because experimental studies throughout the United States reveal that there is a sharp drop in parole violations among those released who procure jobs that pay well. These benefits come about through the involvement of concerned staff and community. The two types of benefits are immediate and long range.

Immediate Benefits Derived From Involvement

Pre-planned and carefully instigated involvement between institutional personnel and community agencies and individuals can result in benefits which can be detected almost overnight. Personnel within the institution begin to recognize the benefits of a program which improves morale of staff and inmates, and which, when tested, shows positive results of accomplishment such as less institutional problems, lower recidivism rates, more understanding staff and greater program participation by inmates.

Coupled with these benefits comes a more enlightened citizenry toward the entire rehabilitative process due to their involvement and better understanding. Call it good public relations or whatever, but getting individuals involved in institution programs helps every administrator and makes sense. The public only knows what we want them to know because of our controlled society. If they only hear the bad it's our fault, not theirs. The old saying, "You can't see the forest for the trees," is also appropriate to institutional staff and administration. New ideas come from outsiders; some good, others bad. It's your job to screen these ideas and separate the chaff from the wheat. Volunteer time increases the amount of manpower available to the warden and educational personnel. The public image improves immediately. With better understanding the public becomes more sympathetic to the needs of the institution and adds support for these requests. Nothing sells people like involvement and results.

These community ties are not without certain dangers, however. Security problems become greatly increased as more people move in and out of the facility. Much of the volunteer help is worth exactly what you pay for it. Extreme caution must be exercised in this phase of your program development. Careful appraisal by qualified staff must be made of any and all agencies or individuals who agree to assist. A thorough understanding of the entire spectrum must be had by all participating if the proper results are to be obtained. Without this complete orientation, the whole program can be in danger of failure. Always remember there are more "do-gooders" than there are "good-doers" when it comes to volunteer programs within the institution.

Long-range Benefits Derived From Involvement

Programs which reduce recidivism, eliminate public misconceptions of penal institutions, and insure greater responsiveness on the part of the institution to the needs of society are what make the long-range benefits worthwhile. Community involvement brings on an awareness of needs and provides long-range support for legislative measures and appropriation requests. An interested and informed public is the administrator's greatest asset when dealing within the political arena for tax dollars. Proper programming brings about reduced inmate populations and less demand on the taxpayer. It returns to society men and women who are capable of becoming taxpayers and responsible citizens. These benefits make all of our efforts worthwhile.

Nature of Involvement

Institutional and community involvement is usually broken down into two areas of interest. First, the internal programs which include some utilization of community resources and secondly, the external involvement which includes times when the staff or inmates leave the confines of the institution to participate out in society itself.

CONTINUED

4 OF 7

Internal Programs

These programs provide an opportunity for inmates to learn while doing in certain work activities. While the work project is extremely beneficial, the close association of the personnel while teaching and. supervising these jobs is most important to a successful program. Learning experiences within institutional maintenance--electrician, carpentry, plumbing, machine operators, barbers--have proven invaluable in preparing inmates for outside employment upon parole or release. Prison industries can provide not only dollar savings to the operation, but can offer real opportunity to inmates in learning marketable vocational skills including good work habits. Programs must be continually evaluated because a high inmate population sometimes creates poor work habits in an effort to avoid idleness.

Industries which function around woodworking, welding and machine shop, printing, body shop, auto mechanics shop, television and radio repair shop serve as aids to learning vocational skills. No good administrator or educational director should overlook the informal activities such as cooking, baking, laundry, housekeeping, and hospital orderly work, for each of these provides increased involvement on the part of staff and inmates. Be sure to utilize personnel with special skills who are able to assist inmates who are trying to learn. An involved staff is an ever improving staff. Basic education does not stop with inmates. The warden and administrative staff must always encourage participation in programs by all employees of the institution.

There is an unlimited amount of internal programming for utilizing community resources within the penitentiary. Encourage the community leaders to bring their talents inside the walls. State employment offices and vocational rehabilitation divisions are more than willing to send representatives to the institution to work with and assist inmates in preparation for release. The public school is often ignored by administrators. No greater opportunity for the interchange of ideas and utilization of professionals within the educational field exists than within the public school system. Colleges and universities are more than willing to help. They will often assist in training staff as well as educating inmates.

Operation Stay-out in South Dakota offers a series of pre-release counselling sessions for inmates. These sessions are conducted by people of the community on topics ranging from health care and money management to good grooming. The meetings are always followed by group discussions to get the inmates involved.

Other areas in which we get the community involved are: (1) Jaycees, (2) Alcoholics Anonymous, (3) Bureau of Indian Affairs, (4) Service to the Blind, (5) athletic groups, (6) arts and crafts classes, (7) entertainment groups, (8) church classes, (9) service clubs, (10) dramatic troupes. The list is limited only by the efforts of the staff.

External Programs

Direct contact with society on the outside is extremely important. We have a group of inmate speakers who leave the institution almost daily to talk to schools, parents, service clubs and other interested people to tell their story of the road which leads to the life of crime. "Operation Pitfall" has spoken to over 250,000 people in the last few years. Their stories are told to stimulate young people to evaluate their own paths and potential destination. This is another step in providing a positive image for the institution and does wonders for the inmates who participate.

Work release programs provide an opportunity for selected inmates to be placed on jobs prior to release from the penitentiary. They go to work in the daytime and return to the institution at night. Community acceptance is the only thing that makes a program of this type go. The acceptance comes about through dedicated staff involvement on the community level. These same staff members must be involved in advanced education service programs and church activities. All involvement and programs must be coordinated to fit the objectives of the institution. The expense must be evaluated according to results and security, and supervision must not cause the institution to suffer.

Achieving Maximum Involvement

Programs that are worth doing are worth doing well. The greatest effort must be made to see that every program is carefully planned and then is provided the opportunity to prove itself. Maximum organizational effort and planning, plus complete utilization of community resources is necessary if the desired results are to be accomplished. Resources are only limited because of the misunderstanding between institution and community. Institutional administrators must commit themselves to the task of providing maximum involvement of not only personnel but also community agencies and individuals.

Strategies for Dovetailing Programs and Activities

It must always be remembered that there is no way to separate security, education and attitude development within the institution. This is also very true for the external involvement of agencies and individuals. Those who are to cooperate and participate in the program must understand this. All three aspects are inter-acting and must be considered when planning an educational program.

To insure administrative acceptance, all programs must be presented by the coordinator to the warden and his deputy. This coordinator must organize the total agenda of involvement. It is the only way that major overlapping can be eliminated. Continual monitoring improves the quality of community ventures, balances the activities and keeps them in line with institutional philosophy. Without this close coordination, and

without the warden's wholehearted support, the programs are doomed to failure.

In order that maximum involvement may be achieved, each program must meet the criteria of the institution's philosophy as directed by the warden. The programs which do not must be turned down as unacceptable. Many of these programs may be excellent in other areas of the country but may be totally unrealistic in your institution. Be sure that the evaluation is an honest one and do not discredit programs because they are new and haven't been proven in your institution or elsewhere.

Flexibility is an important key when instituting new programs. Give both the program and the participants a chance. In order to insure this success, it is important to incorporate the best of the community's resources and seek only the highest quality individual in the early stages. Nothing is more important than a little success in the beginning stages. Increased interest, good public relations, earnest desire to help, genuine concern for improvement, and close relationships between inmates, staff and the community are the end result of good dovetailing programs. This dovetailing really begins with greater staff orientation and in-service training, followed by educational and security personnel planning together and recognizing both short and long term benefits, followed by utilization of other state services from outside the institutional setting, and finally to the bringing in of the many community resources which will enrich the educational programs and activities provided inmates.

Obstacles and Hurdles Working Against Interdepartmental, Interagency and Intergroup Operation

First and foremost in consideration of obstacles to proper programming in institutions which will bring about maximum involvement is a reluctant correctional administrator. A complete and thorough job of selling must be done in this area if any program is to be inaugurated. The old adage of starting at the top was never more important. Once the administration is convinced of the worthiness of the involvement plan, then you are halfway home.

Using outside people in your institution necessitates allowing administrative time for orientation and supervision. The time needed is in direct relation to the time spent by these outsiders in the institution. Screen the volunteers carefully and be sure they are endowed with a great deal of good common sense. Too often they have a tendency to become "experts" in the field of corrections after a brief view of penitentiary life under these controlled situations. This must be closely watched as reluctant staff are continually looking for excuses for the program to fail. Remember, too, that security must be an overriding factor for the staff and administration. Staff tends to over-react to change because of additional work assignments and a natural reluctance to try something new and different.

Interagency and intergroup involvement often causes serious problems for the personnel. These outsiders have a tendency to let their emotions become involved to the point of overcoming good judgment. This cannot be allowed to happen and close staff supervision can prevent it from happening. False hope and the setting of goals beyond reach can endanger the development of realistic programs. Many good programs have been killed because the goals were beyond accomplishment. Do your homework. Don't forget that politics influences legislation and appropriations, but never let politics play any part in the development or evaluation of a program. As more involvement is achieved, more political pressure comes to bear.

Summary and Conclusions

Institutional involvement with the community, and community involvement within the institution is the vehicle with which to provide new programs for corrections. Administrators must recognize the great potential the community provides for the rehabilitation of inmates. Much has been done to enlighten the citizenry toward the entire rehabilitative process but much more work is needed to improve the image of corrections today. Penitentiaries are no longer islands unto themselves and the day of ignoring rehabilitation is gone--and thank God for that.

Community involvement and the use of volunteer help can be a positive force in the upgrading of correctional programming for the inmates in our charge. Volunteers can be an instrument of good for the offender. They provide an avenue of contact with the outside world--this world to which more than 99 percent someday return. Many positive effects come with greater involvement of community resources and individuals. Industry is usually anxious to help, expert technical and educational advice and guidance is available free for the asking. The public is more willing to support tax increases when they are directly involved or informed and there is always a greater tolerance and understanding of our failures and problems. Volunteers become the best public relations media coming out of any institutional setting. Be careful not to underestimate their influence within the community and state.

As far as I know, we in corrections have never claimed perfection. Some criticisms are warranted. It seems to me that too often our treatment programs are token in character and often times our field has attracted too many second-class minds who have provided timid and vacillating leadership. Way too many of us are reluctant to rock the boat, to try new approaches, and as a result, we do not furnish the leadership which society can rightfully expect from us. We have, through community involvement, a chance to institute change by our own choice. Each of us should and can do something about it. The demand for the tax dollar is extremely competitive and with crime and corrections being negative concepts in many people's eyes, the struggle for us is greater than for any other segment of American life. Good performance must have recognition. Too many of us have tried to operate in a vacuum and behind locked doors.

Involvement is not for the faint at heart. Take steps toward professionalism within your organization. No one wants to be connected with a loser and if we are to attract high calibre, professional staff we must not only know our job well and be proud of doing it, but we must learn the role of others and the importance of the contribution they can make to the correctional field. Get them involved and do not be afraid of making mistakes for the only ones who do not make mistakes are those who do nothing.

I take this opportunity to acknowledge the assistance of Warden Don Erickson, Deputy Warden Cliff Hoss and Educational Director Dean Hinders, all of the South Dakota Penitentiary.

Educational Information from South Dakota State Penitentiary-1969-1971

(a)	Median grade completed	8.3
(b)	Grade level average	9.1
(c)	Number with college degree	1
(d)	Two or more years of college	3
(e)	One year of college	3
(f)	Average reading level	8.4
(g)	Median reading level (Slasson)	9.1
(h)	Highest reading level (Slasson)	upper high school
(i)	Lowest reading level	(.6)
(j)	Average intelligence quotient	76
(k)	Highest intelligence quotient	124
(l)	Lowest intelligence quotient	52
(m)	Completed General Educational Test (Equivalent to H.S. certificate)	28

CURRICULUM DESIGN AND ORGANIZATION: A NEW LOOK

Frank Snyder
Montgomery County Public Schools
Rockville, Maryland

Introduction

A curriculum for adult basic education must represent a well-planned course of study and be designed to meet the specified needs, interests, and concerns of the individual students. It must assist the individual to become a self-dependent, participating member of the community.

A curriculum will determine the experiences of the learner while experiences will determine the behavior of the individual. Learning is a change in behavior due to new experiences. The adult basic education curriculum must be designed to (1) attract the attention of the student, (2) produce a program which has a good change of realizing its goals, (3) provide the outlet for the individual to realize his latent potential for learning and doing, and (4) be productive.

In designing a curriculum for adult basic education, it is essential to understand that many of the same fundamental principles that have evolved in practice for a number of years, and have proved to be effective in accomplishing the objectives of various programs, will continue to provide an effective foundation for curriculum planning now and in future years. An adult basic education curriculum needs to be continuous, with constant change taking place to assure that it is relevant. It is very likely that a continuous curriculum will be relevant. The adult basic education teacher cannot be limited to one set of goals, one set of objectives, one curriculum. The number of plans needed may be determined by the number of students in the class. Objectives of the program must be varied and the curriculum must reflect concern for the individual student through student-teacher participation. It is essential that the needs of the individual student be considered, and that the opinions of the students be given full consideration regarding these needs.

Other concepts to be considered when developing a curriculum for adult basic education include providing for self-pacing learning, assurance of continuous progress, and professional freedom to teach. These principles, applied to real life situations and reinforced by constant program evaluation, should assure a curriculum that is productive.

Assumptions and Questions

The adult basic education teacher has the primary responsibility for affecting desirable changes in the behavior of the educationally disadvantaged, which will in turn assist the adult learner to better relate

to today's society. A curriculum that will assist in the successful accomplishment of this objective is the responsibility of the curriculum planners. Good plans will not necessarily guarantee good programs, but programs are seldom, if ever, good by accident.

Before guidelines can be developed for an adult basic education curriculum, it is important that several assumptions be considered:

(1) Quality in any educational program must have the highest priority. Excellence in education should not be subordinated to other goals and considerations if it is to bring about the full potentialities of the learner. Program planning cannot be piecemeal with only halfway goals.

(2) The curriculum must be dynamic and changing. The constant changes in organized knowledge as well as society itself dictates that continuous studies be instituted that would (a) substitute new for old content, (b) reflect changes in today's society, and (c) motivate the educationally disadvantaged in a direction that would enable him to cope with these changes.

(3) Curriculum planning must be continuous. A dynamic curriculum cannot rely on periodic changes but must reflect an ongoing review of all aspects of the program.

(4) Curriculum planning should not be the sole prerogative of curriculum directors. No one group should have the sole responsibility of planning an adult basic education curriculum. Many planners should be involved including curriculum directors, classroom teachers, program administrators, and adult basic education students.

(5) No one curriculum plan will serve all programs. It is important that there be a national effort to improve the adult basic education curriculum. However, this effort will not, and should not, dictate a single curriculum for all areas of the country. While curriculum planning procedures should and will vary from area to area, from center to center, and even from classroom to classroom, these procedures are likely to be logical, consistent, and identifiable in each situation. Because of the need to serve each particular situation, providing changes as needed, it is unlikely that a "best" pattern of curriculum planning can be identified. However, it must be assumed that each procedure followed by an individual program will relate to local resources and will reflect a progression from initial ideas to positive action.

In addition to these assumptions, there are several questions that need to be considered before attempting to establish curriculum guidelines for adult basic education:

(1) What goals are to be accomplished by the curriculum?

(2) If these goals are to be accomplished, what learning opportunities need to be included in the adult basic education curriculum?

(3) What procedures are to be used to organize and present the identified learning opportunities?

(4) Have provisions been made for a continuous evaluation of the program?

Goals

Today, goals are considered more important than means, with the one unpardonable sin being failure. In establishing goals and developing methods to accomplish them, it is important to understand the possible reactions by the individual. He may (1) conform by accepting all that is said and done, (2) innovate by rejecting the means and retaining the goals, (3) retreat by rejecting both goals and means or by accepting the means and rejecting the goals, allowing him to remain in familiar surroundings, (4) he may reject the whole structure of the goals and means system and in effect, make an effort to change the existing system.

In establishing goals for an adult basic education curriculum, the planners must give primary attention to the changes to be effected in the adult learner. This notion will assure that the emphasis will be placed on the specific behavior change that should take place in the learner rather than reflecting a specific activity planned by the instructor. With the accomplishment of the initial behavior change, other desired changes can then be identified.

While this concept appears to be a logical approach to a meaningful curriculum planning activity, the element of value judgments by the curriculum planners is still evident in establishing goals. If these judgments are to be beneficial, the curriculum planners need to have available considerable information about the adult basic education program and its students, viz., (1) a clear understanding of the philosophy of adult basic education, (2) a clear picture of the many characteristics of the educationally disadvantaged, (3) an awareness of the prior educational and personal experiences of the adult learner, (4) a knowledge of how these past learning activities and experiences relate to the expectations of today's society, (5) an insight into the adult learner's environment and the forces that have affected his life up to the time he enrolls in an adult basic education class, (6) an understanding of the basic need of the individual to enjoy new experiences, to have security, to be loved, to realize self-maximation and peer acceptance. Additionally, the curriculum planners must be aware that all learning experiences that are integrated and are consistent with each other also will reinforce each other.

Adult basic education is a practical discipline and, as such, must direct its primary focus to those aspects of today's society that have meaning and are important to the student. Planned classroom activities must relate to out-of-classroom activities if they are to have relevancy for the adult basic education student. Learning computational skills for the purpose of completing a page of problems does not appear to be of any great importance to the adult student; learning this new skill and applying it to consumer buying, banking, computing interest or preparing income tax forms will bring a new meaning to mathematics.

Learning Experiences

Once goals have been considered, evaluated, and selected, the curriculum planners must decide on the learning experiences needed to accomplish these goals. Some very basic concepts concerning factors in learning should be reviewed to assist the planners in the selection of appropriate learning experiences:

(1) Behavior. The basis of all learning is behavior. It is motivated and goal seeking. Attainment of a specific goal results in the reduction in the "learning tension" and provides a satisfaction of a particular need. It also provides the learner with a new concept of himself and should cause him to restructure his behavior, which refers back to the definition of learning set forth previously.

(2) Understanding of goals. The adult learner must have a clear understanding of the selected goals. The goals must be meaningful to the learner and not just a planned activity by the teacher.

(3) Motivation. Motivation is the one indispensable element in learning. The goals and means system is driven by a third component, viz., needs, which can be produced by either internal or external stimulus. Physiological needs are usually accomplished through early learning activities, reinforced through repetitive experiences. New experiences, security, love, self-maximation, peer acceptance and safety constitute a general list of adult needs that can affect the learning process. The safety need is one that can have a tremendous affect on adult basic education. The educationally disadvantaged adult characteristically chooses safe and comfortable surroundings rather than venturing into new and unknown situations. The need to explore new areas and the knowledge that it is possible for him to succeed in these new areas must begin within the individual if learning is to take place. These needs all are related to a deep rooted desire for status and dignity.

(4) Readiness for learning. It is important that special efforts be made to determine, for each adult learner, the appropriate level in his development pattern at which to offer him new or specific types of learning experiences.

(5) Transfer of learning. Organizing and channeling previously developed concepts, principles, ways of dealing with situations into generalized guides to behavior will be of great help to the adult learner in dealing with succeedingly more complex environmental situations.

(6) Individualizing instruction. The curriculum planners may need as many programs as there are students in a class. The adult learners bring to class different educational and personal experiences, different motivational factors, and varying capacities for learning.

(7) Student activity. The adult learner needs to participate in the learning activity with frequent opportunity for practicing and using previously learned skills. Each day's activity should provide for a reinforcement of the previous day's learning.

(8) Learning atmosphere. The adult learner's past school experiences may have been mostly negative with most of his accumulated deficits having had their origin in school. Develop a learning atmosphere that is not a repetition of his previous school experience. Develop an atmosphere that presents new and meaningful activities, new associations and opportunities for group activities, personal interest study areas, and an opportunity to fully exploit his capacity for learning.

(9) Constant review and evaluation. Providing constant review and reinforcement for the adult learner is essential to the learning process. Knowing previously defined goals, strengths, weaknesses and accomplishments to date, can be a motivating factor for the adult learner to achieve his objective.

The learning process will greatly affect the learner in many ways. While the adult basic education program has been identified as a basic skill program, emphasizing reading, writing, and arithmetic, it actually is concerned with the total development of the individual, viz., academic, socio-economic, health and personal hygiene, consumer economics, occupational education, civic and social activities, home and family education, human relations, and social awareness and graces. The curriculum planners have the responsibility for developing activities that will affect all aspects of the adult learner's life style. They must be aware of the implications of this responsibility and plan their program to build on the foundation each student brings to class.

Organizing the Adult Basic Education Curriculum

The concept of the "broken-front" approach to curriculum organization and planning must be considered since a single learning activity will not effect the desired changes in the adult learner. This approach recognized the need to consider specific subject areas and other curriculum components, placing specific emphasis on basic academic, social, and vocational areas of instruction. It is equally important to understand that curriculum improvement is of such dimensions that it requires a comprehensive program of appraisal and action. It is, therefore, recommended that an adult basic education program be developed in the following ways:

(1) Identify specific curriculum needs. This initial step, which will require a realistic look at the current situation, will determine the strengths, weaknesses, and needs of the program. It is necessary to consider the broad area of reading with sub-areas of comprehension, vowels, contractions, possessives, word development sounds, prefixes, sub-fixes, and inflections; writing, including both printing and cursive drills; mathematics, with sub-areas of number values, manipulations through addition, subtractions, multiplications, and division, decimals, fractions, percents, ratios and proportions and our money system; and spelling and speaking, beginning with the most frequently used words and continuing to include new and more difficult words. A definite correlation should be established between spelling and speaking skills and reading and writing skills.

Further evaluations should be made to determine the students abilities to listen and observe, the socio-economic background of the adult students, the students ability to think objectively, creatively, logically, intuitively, and independently; the extent of his responsibility for self-direction, his ethical and spiritual values, his mental and physical health, his belief in our American democracy and his appreciation of the worth of the individual and of the family in today's society, and finally, his career interests and ambitions.

Following this evaluation of the current situation there is the significant activity of selecting priorities for both the program and for the individual. This activity, to be most effective, must consider the established behavior patterns of the adult learner and long process of learning that has contributed to these behaviors. While the established priorities may be significant to the curriculum planners, it may require a long period of time for the adult learner to re-evaluate his habits and familiar activities to the point where he is willing to restructure his values and standards.

Once these priorities are established, innovations to be considered and the various resources for implementing these activities should be identified.

(2) Consider new and innovative activities. Innovation is the primary source for curriculum improvement. Innovation can be an entirely new concept or it can be an idea borrowed or adapted from another area, school, or class. Any change is an innovation in the particular situation where it is tried. This concept dictates that national, state, and local agencies dedicate their activities to program improvement in adult basic education and make new and innovative programs and ideas available to all adult basic education programs in this country. The value of seminars, as well as summer work-shops, cannot be over-emphasized. These activities provide an excellent vehicle for the dissemination of ideas, materials, and methodologies of teaching.

(3) Include evaluation activities in every new curriculum or innovation. The lack of adequate evaluation practices is a primary reason for the failure of many curriculum innovations to achieve their intended goals. This is due to a lack of sufficient criteria of educational effectiveness, lack of funds to establish adequate evaluation, lack of a controlled situation over a significant period of time, and finally, an ingrained reluctance to be proven wrong.

(4) Diffuse desirable innovations. This rather obvious step should be done as quickly and as widely as possible. An idea or technique found good in one situation should be shared with others as a means of possible improvement in a number of classrooms.

The curriculum planners need to understand that the preceding steps are not activities that are carried on at one time. Earlier, the importance of an adult basic education curriculum being continuous was stressed. An effective program of curriculum planning very likely will have simultaneous activity in all four steps, viz., spreading some innovative practices, evaluating others on a pilot basis, considering innovations to meet specific needs, and continuing to re-evaluate various areas of the existing program.

In each of the foregoing steps it is important that the adult learner have adequate opportunity to strengthen previously learned skills; that new learning situations build on those previously experienced, with the learner progressing from the more simple activities to those that are more complex; and that he be able to relate in-class practices to out-of-class activities.

Curriculum Evaluation

Evaluation is a rather significant activity in the attainment of new knowledge, identifying problem areas, and in selecting appropriate procedures to solve these problems. To evaluate is to make conclusive decisions regarding the worth of something, and worth is expressed as it relates to some form of criterion. Five steps can be identified in the evaluation process:

(1) Determine what to evaluate. The whole idea of evaluation revolves around goals and objectives. The single most difficult factor in evaluation is the failure to arrive at objectives which have been agreed upon, understood, and accepted by curriculum planners and students alike. Many factors affect the formation of objectives, foremost of which must be appropriate to the current situation. Goals are formed through values held by and the needs of the society and the sponsoring organization, the needs and interests of the individual learners, subject matter itself, and learning theory regarding the attainability of specified objectives. All objectives should be achievable, consistant with other objectives to which the educator is committed, structured so that through their accomplishment new goals will be suggested, agreed upon and have identical meaning to the planners and learners alike, and they should be closely related to desired learning behavior.

(2) Define the behavior desired. An appropriate amount of specificity is essential, with analysis carried far enough to clearly identify what behaviors will represent evidence of the broader objectives and at the same time present a comprehensive picture of a particular area of concern.

(3) Determine acceptable evidence. Deciding the extent to which an objective has been attained closely relates to a determination of how the learner reacts and behaves at the various stages of attainment. It is necessary to provide adequate opportunities for the learner to exhibit the desired, appropriate, and quality of behavior described in the objectives.

(4) Collect evidence. Records can be collected in a number of ways. The learner can contribute through paper and pencil tests, questionnaires, self-inventories, and autobiographical materials. A second person can obtain data through personal interviews, observation, and check lists.

(5) Summarize the evidence and make decisions. Summarizing evidence can be accomplished by counting, describing, and analyzing. Following this activity judgments are made regarding the steps employed in the total educational

process. These judgments may lead to a modification of previously stated goals, a change in the prescribed learning experience, or the development of a new means of evaluation.

The Teacher and Planning

The single most important force in curriculum planning is the teacher. Persons responsible for adult basic education programs must be sure that the teacher is not excluded from the planning process. A teacher not involved in the planning activity may experience some difficulty in presenting the prepared program or he may actually resist a program in which he was not involved.

Teachers in general do not follow one set method of teaching as they from time to time change their procedures as they meet new situations in the classroom. Being involved in program planning enables the teachers to make these adjustments in their teaching procedures more easily and following the well known concept that the best teacher is the best prepared teacher, provides them more of an opportunity to be prepared to teach.

The success of an adult basic education program can hinge on the interpersonal relationships established between the teacher and the adult learner. The teacher's planning includes selecting activities that relay the feeling to the adult learner that he is important and that he is accepted as he is. Experiencing some form of success, immediately and continuously building on that success, will help the adult see himself in a more positive way. This friendly and warm interpersonal relationship with the teacher will be reflected in the behavior of the student, leading him to group activities and an opportunity to join others in the growing and learning process.

Summary

Curriculum planning in adult basic education must be continuous and relevant if it is to be productive. Each of the processes and steps outlined here are inter-related and require a continuous evaluation of all aspects of the program.

Curriculum planning is a cooperative process involving teachers, adult students, program administrators and curriculum planners. It includes identifying the program goals and objectives, identifying specific needs, utilizing all available resources, and developing new materials and methodologies to relate to the educational needs of the educationally disadvantaged adult.

References

Anderson, V. E. Principles of curriculum improvement. New York: The Ronald Press Company, 1956.

Bergenin, P. E. A philosophy of adult education. New York: Seabury Press, 1967.

Cay, D. F. Curriculum: Design for learning. New York: The Bobbs-Merrill Co., Inc., 1966.

Delken, P. V., & Venn, G. A lifetime of learning. Washington: U. S. Department of Health, Education, and Welfare.

Inlow, G. M. The emergent in curriculum. New York: John Wiley & Sons, In., 1966.

Saylor, J. G., & Alexander, W. M. Curriculum planning. New York: Holt Rinehart and Winston, Inc., 1966.

A CURRICULUM DEVELOPMENT DESIGN FOR INMATE EDUCATION

Charles M. Barrett
State Department of Community Colleges
Raleigh, North Carolina

The usual approach in writing papers of this type is to first paint, with eloquent and grand phrases, the overall need for inmate educational programs, complete with all of the clichés on the inequities of the social system, coping, the disadvantaged, prejudice, and the like. This paper refrains from that practice, not because of a lack of faith, commitment, or orientation, but because your attention indicates an awareness of these needs, and repetition would insinuate ignorance.

It is ridiculous to assume that educational programs in correctional institutions are going to succeed by their own divine guidance. The success of any educational program in the correctional institution is directly proportional to two conditions:

(1) the degree of positive and total commitment of the institutional administrators, and

(2) the theoretical soundness of the curriculum plan itself.

Commitment is not an abstract term, it is the sum total of motivation. It sets the tempo for all events that follow. Halfhearted attempts or lip service attention to rehabilitation through education is a sham, transparent not only to the inmate, but to the public in general. Rehabilitation by education is a fragile concept. It is extremely dependent upon the environment in which it exists, and an environment not only determined by physical conditions but also by the philosophical orientation of the institutional staff. Therefore, prior to addressing the problem of curriculum design, some attention to several prerequisite conditions appears necessary.

First, we must come to grips with the concept of rehabilitation through education. It is not a new structure for the continuation of beans and barbed wire practices. It is based upon the belief that man, given ample opportunity (ample in its fullest meaning), can change his behavior. Secondly, there should be an alternative method of promoting the acceptance of basic education programs among the inmates. For most of these individuals, education as an abstract status concept is totally meaningless. Few of them have had successful educational experiences, and are thus unable to relate to the advantages of highly developed skills. What must be done is to reach these individuals through their own motivations and needs. For example, the primary motivation of any inmate is to be released. Society

is somewhat aware of the variety of methods employed to achieve this end. Are there not other methods that can be legalized which would satisfy this and other motivations? Could society not reward successful achievement in educational programs with shorter sentences? Yes, some will play the role, gather their points, and be released and return to their former behaviors. But doesn't that happen now? If he has been exposed to, and learned only a few of the skills and values needed to cope with the outside world, he is bound to be better prepared, and less likely to return to prison. Thirdly, education cannot exist in a vacuum. It is only as meaningful as its degree of relation to real life. Therefore, there must be opportunities for the inmates to exhibit their changed behaviors, in environments characterized by openess and trust, outside the walls and in contact with society where the inmate can place his newly found knowledge, values, and skills on trial. It must, in the final analysis, fully prepare him to take his rightful place in the outside world. It must make the freedom-transition shock a thing of the past. Without some evidence that the inmate has the ability to immediately cope with the outside world, his release is not only inviting recidivism, it is criminal.

As evidence of such programs and their success, the following articles are called to your attention.

CHARLOTTE (N.C.) OBSERVER Jan. 13, 1972

By DAVE BAITY
Observer Gastonia Bureau

DALLAS — They looked like typical students as they came down the walk at Gaston College.

Malroi Kimbrough, 21, a handsome black youth with his hair puffed into an Afro style and a pearl earring in one pierced ear, wore a fatigue jacket and sweatshirt over khaki pants.

Gordon Beal, 20, was neatly clad in blue jeans, boots, blue dress shirt with the tail out. He laughed and brushed his almost black bangs back out of his eyes.

Les Cline, 18, was typical "Joe College" — dress pants, casual shirt, green monogrammed golf sweater — squinting through glasses into the bright afternoon sun.

Chatting happily, joshing each other in youthful fashion, comparing notes on their day, they walked to the bus which waited for them in front of the classroom building.

The bus was gray and contained about 18 other young men.

Malroi, Gordon, Les and the others were on their way to the dormitory they call home for now, a dormitory at the Dallas Prison Camp.

Located about a half mile from the college, the camp was converted about a year ago to a facility for youthful offenders. A few months ago, a fence topped with barbed wire which had ringed it, came down.

The inmates are free during a good part of the day to blend into the community, visit with community sponsors who take them on outings, work at jobs in local plants, go to school.

But, it's a prison still. The officers in charge know it, and the inmates know it. And, oddly enough, for some of the inmates at least, it is underscored by the freedom they have.

According to Bob Wallace, a Davidson College student who is a parttime counselor at the camp, the authorities here think that trusting people makes them feel worthy of trust and placing responsibility on their shoulders makes them responsible.

"These young people (the camp is designed for men ages 16 to 21) in here are commited youth offenders," said Larry Galant, the staff psychologist who is also a professor at Gaston College.

"Above all other inmates (in the state's prison system) they stand a better chance to make it outside. What we're trying to build up here is their self-concept . . . try to let them see that they have a place in the world, in society before they're released. If we can hit them with this, it will change their attitudes."

The program, probably a pilot of things to come in the state penal system, has excited the people here, but it hasn't been totally successful.

Captain Charles Meares, the 38-year-old head of the camp, said there are occasional escapes. And, about six months ago when the prison broadened its work-release program to allow inmates to further their education at two-year Gaston College, "there were four or five escapes," he said.

He hastens to point out, however, that those incidents haven't hampered the success of the educational program at Gaston College.

"So far — and keep in mind the whole thing started last June — there have been 35 CED's (General Education Development(certificates, the equivalent of a high school diploma given to inmates,," Meares said.

Dr. Mike Latta, dean of continuing education at Gaston College, said the first group of inmates brought to the campus were working on high school diplomas in the college's learning lab and spent about six hours a day in class. That was coupled with "cultural experiences" such as attending lectures by visiting authors, concerts and attending movies.

"I can't say we didn't have some problems, some adverce reactions (from other people on campus) at first," Latta said. "They were naturally suspect."

But, he said, he laid down the law to the students, told them they would be expected to perform exactly as any other Gaston student or be booted out of the school.

Troy Chafin, a 30-year-old instructor who has worked with 18 students who have been trying for high school equivalencies since September, said that the strict supervision the students had been subjected to early in the program was relayed in the fall.

"If any had wanted to walk off, they could have. But, not a single one has. It hink the freedom they had, the trust was was put in them, made it work," Chafin said.

Several inmates have even worked off GED's and are now in the college parallel division of the school studying for degrees.

Kimbrough and Cline are two of them.

Kimbrough, a product of the Chicago, Ill., ghetto, has found a new view of life through the experience, he said.

"Where I came from, we just wanted to do what we wanted to do, didn't really see much future . . . it was kind of a dead end," he said. "You sort of took what you could get and hoped you didn't get caught."

That outlook prompted him, when he was with the 82nd Airborne Division at Ft. Bragg sometime back, to rob a grocery store with some friends.

He was caught three days later and given an eight year and nine month sentence. He's served 3½ years of it and is now waiting for parole.

"I've had a lot of time to think," he said. "I've been in Central Prison, the Polk Youth Center, the Huntersville Camp, and now here. This is really different here, not much like

making time at all. But, that wall being down means something to me. It makes me more reluctant than ever to w alk away."

He said that when his parole comes through, he wants to stay here, get a job, and continue at Gaston College.

"Then I want to go to the University of North Carolina at Charlotte, get a psychology degree," he said.

And then what?

"I want to work in the penal system, be a criminal psychologist," he said.

Cline, convicted of selling narcotics, was sentenced to "one day to three years" as a youthful offender. He could have been given 25 years for the crime.

He's from an above-average, middle-class family from Hickory and is now working on a data processing degree, he said.

He'd sold drugs to "get money to buy equipment for a rock band I had" and never thought about it in terms of "being criminal."

After six months in prison, he's changed his mind.

"I see the bad that can come of it (drugs)," he said. "I don't agree with it (the use of drugs) anymore."

Gordon Beal was the product of a broken home, dropped out of school at 16 and got married to get away from it and find a life of his own.

"That's when my troubles really started," he said. He wound up in prison after some domestic difficulties, which resulted in a series of charges.

And, last summer, he escaped from the camp because he wanted to get back to his wife and young son.

When he was brouht back after his escape, he figured he'd "blown everything." A judge added six more months to his two-year sentence and the mark against him had wiped out the chance for getting into a work-release program.

"Then I started wondering if I could get into the school program," he said. "But I didn't really think so. I was really surprised when they let me."

He's learning auto mechanics in the college's vocational department.

"You know, they even let me keep my driver's license so I can test a car after it's fixed. That means a lot to me. It makes me feel like somebody," he said.

The Story of a Governor and an Ex-Convict

HOW ONE MAN CAME BACK

by Don D. Wright

It is about two miles from the "black hole" in Salem's Oregon State Penitentiary to the Office of the Governor.

Not far physically—just two miles—yet only one man in history has ever made it.

Today, that man—Ted Winters—supervises 11 employees of the Oregon State Economic Opportunity Office under Governor Tom McCall.

Four years ago, Marcellus Penry (Ted) Winters, then 43, a four-time loser, was serving a life sentence for armed robbery, having spent nearly half of his life behind bars. Spanning nearly a quarter of a century, the slight, quiet-spoken lifer's career in crime had taken him from his native Eugene ("I was known as the Lovers' Lane Bandit") to the Midwest ("Our biggest haul was $17,000 from a supermarket").

Having escaped from two prisons, twice pulled a gun on arresting officers, been convicted of kidnaping and assault and led a prison disturbance—a more unlikely candidate for rehabilitation hardly could be found in the Oregon penal system.

Yet this same man now is able to justifiably declare:

"Mine is not a story about a convict, but a story about a man who, incidentally at one time in his life, was a convict—there's a very big difference."

Robert G. Davis, Executive Assistant to Governor McCall, talks about the paroled lifer:

"Ted's criminal record adds flavor to his story, but most important, he's doing an outstanding job as the state's OEO supervisor—mind you, without the formal education which many would claim was essential.

"A significant mark of his adjustment," Davis points out, "is that his record doesn't bother him. Ted's transformation is a very real one—I've seen him in some tense situations, where he's been the coolest one in the group.

"He has continued to grow to meet the responsibilities of an office which has expanded tremendously since he was hired. No one knows Ted's full potential, but I do know he's nowhere near reaching his limit of competence at this point."

The story of "a man who, incidentally at one time in his life, was a convict" began in Eugene, Oregon, where five Winters children were raised in the peaceful setting of a fruit orchard which their father, a zinc-miner who had moved West for his health, operated for the owner. The pastoral life ended when Ted was on the threshold of adolescence. The Depression forced the family to move into town, where they depended on the charity of a local grocer to see them through.

The youngest of four boys ("My nickname was Runt"), with a baby sister who was the attention-getter, Ted left home at 14 to ride the rods for five months. Upon rejoining his family, his alienation accelerated. Unable to compete with his athletic, hard-working brothers, "Runt" began a life-long performance as a "tough guy." Stealing became a way of showing off. Frequent arrests resulted. ("I enjoyed being questioned by the police—it was a form of attention.") At fifteen he was pulling stickups and, with an older companion, he began robbing couples in "Lovers' Lane."

Caught, he was sentenced to a training school for boys at Woodburn. ("A young killer had just been executed in Oregon, and the judge told me I was gonna end up like that kid.") Released at sixteen, he committed a series of burglaries and was returned to Woodburn, where he critically injured a corrections officer. The assault was so serious it earned him five years in the Oregon State Penitentiary. The first eighteen months were spent providing limestone for an insatiable rock-crusher. Assigned to the prison farm, he walked away. Two months later he turned himself in. The usual penalty for escape was a year in segregation. Even though he had given himself up, the full penalty was imposed upon the bitter youth. ("All I had in my basement cell was my clothing and two blankets. They shaved you once a week, when they let you out for a bath.")

When finally paroled, he participated in 30 holdups over the next 18 months.

A gunfight with a highway patrolman then earned him a term in the Washington State Penitentiary, where he scored high enough on an IQ test to be brought to the attention of the prison's education division. During the next four years he was put in charge of the inmates' library and taught a typing class. Transferred to an honor camp, he walked away.

When stopped by another highway patrolman four months later, he pulled a gun and disarmed the officer, but "just couldn't shoot him." Returned to the Oregon State Penitentiary, he engineered an escape with four other convicts. The venture gained him two hours' freedom and an additional sentence of 15 years.

The next four years were spent in segregation. A year after being returned to the general prison population, he and another inmate led a disturbance. This time the prison administration had him placed in a strip cell—the black hole—for eight days. By the seventh day, Marcellus Penry (Ted) Winters had admitted to himself, for the first time in his life, an unpleasant fact:

"I was a coward, instead of a tough guy. I'd been afraid to compete in life; I was so afraid of life that prison was the only place for me. I was buried alive in concrete."

Facing terms totaling 25 years in Oregon and 15 years in Washington, Ted Winters set a somewhat unrealistic goal for himself: He would work toward being paroled within three years.

How do you begin a self-improvement program in segregation? Like so many other men—both famous and obscure—who have been imprisoned, he turned to writing. In 30 days he had produced a 70,000-word novel. Six weeks later he had written a second novel of 130,000 words. Next he began writing short stories. Eight months later he was allowed out of segregation, and spent the next 18 months studying drafting. Paroled to the Washington State Penitentiary, he had two of his short stories published. Seven months later he was free—as he had planned while in the black hole.

He sold five more short stories, got married, started a paint contracting business and opened a small retail paint store in Eugene. Then the pressure started to build: His wife was pregnant and the paint business failed. He returned to his old occupation: thief.

Five stickups later he was on his way back to the Oregon State Penitentiary, this time with a life sentence.

Back in segregation, he tried desperately to pull himself together. His wife bore him a daughter but his letters to her went unanswered.

Finally, on Labor Day weekend, 1963, sitting on his bunk, the full realization of what he had done hit him.

"I thought of what I had done to my wife, who was the only person I'd ever really let inside me. I decided then I wasn't going any farther—that night I would end my life."

A letter arrived from his sister. Enclosed was a photograph of his wife

and daughter. He says: "They were smiling. I felt that I had been forgiven. I said a simple prayer—of surrender: 'Take my life and do what You want with it.' Very clearly and distinctly, I heard a voice say, 'Walk in harmony with Me.' The next morning I felt exhilarated—that was the beginning of my new life."

During the next three years, Winters clerked for the prison chaplain, a Baptist minister and psychologist, Rev. Neil Concannon, who built his prison ministry around the reformed "lifer." A team of convicts was formed to speak before student assemblies in the schools. The deputy warden, George Sullivan, in June of 1967 convinced the prison classification board that Winters was a proper candidate for the work-release program, and he was allowed to live on a prison farm at night and work as a painter during the day.

At this time, Governor Tom McCall told his staff that the state itself ought to be hiring men on work-release. Accordingly, the state director of OEO, former political scientist Marko Haggard, hired Ted Winters as an office manager, freeing other members of his small staff for field work. On his own, Winters wrote a "position paper" on state prison conditions in which he concluded the potential existed for a riot in a short time. Four months later, a riot did take place—hostages were taken and buildings were burned. Upon reading the position paper, Ed Westerdahl, executive assistant to the governor, personally commended Winters for his report. After that, Winters was allowed to work in the field. He was sent to Albina, the Portland ghetto, where he worked to provide fuel and food for victims of a severe storm.

In February, 1969, Winters was released on parole. Governor McCall hosted a reception attended by several legislators at which the chief executive praised the lifer as an "alert, compassionate man who has a way of being in the right place at the right time."

There followed a reorganization in the governor's office in which Haggard became the state ombudsman and Ted Winters became supervisor of the SEOO.

In putting together his staff, Winters looked for people who "thought for themselves" and would bring a diversity of talent to the agency. Combined with his own lack of administrative experience, the high-octane mixture of "idea" men and women who were recruited resulted in much staff dissension, Winters is quick to admit.

Offered a career-development job in the budget office, Winters turned the opportunity down because of his particular sensitivity to the needs of Oregon's poor. He felt he could accomplish more as SEOO supervisor.

Since then, several programs have been set in motion which Winters believes will have an impact on poverty. High on the list is something called Committees for Progress through Law (CPLs). In order to change the root causes of poverty, the poor must influence legislation. Local Community Action Agencies were encouraged to form CPL's to work with local legislators to have bills introduced which would meet health, education, transportation and housing needs in the state.

The SEOO has worked to improve the efficiency of technical assistance delivery in Oregon communities, hopefully mobilizing resources of other state agencies. The area of state corrections naturally is one in which Winters has more than passing interest. Recently he has been working on a half-way house concept, seeking other funding sources.

Attending his first Western Region meeting of SEOO directors, Winters listened as one of his counterparts from another state—an ex-prosecutor—expressed support for an OEO regulation to limit the employment of ex-convicts in antipoverty programs. When the man had finished, the delegate from Oregon quietly observed:

"If there had been such a regulation, I wouldn't be here today."

The ex-prosecutor "almost fell out of his chair," Winters recalls.

"I have not gone about promoting myself as a successful ex-con," Winters declares, "but I know I have been an inspiration to a lot of men."

Bob Davis of the governor's staff concurs:

"During all the time we've been associated, Ted never once has 'used' his past to get special treatment—or as an excuse for any mistakes. That's pretty impressive.

"This may sound cynical, but as the governor's executive assistant I have met many advocates of the poor who would rather go down in flames, accomplishing nothing, so long as they are fighting for a principle. I have been most distressed by the 'professional bleeders' who confuse rhetoric with action.

"Ted is not that way—his dedication is to accomplishment. You don't find him out trying to solve all the philosophical questions of the world—you find him working on the day-to-day solutions to people's problems.

"I don't believe the task can be completed by pious pronouncements about how things *ought* to be—any damned fool can do that! Talking about problems for the next hundred years isn't going to feed, clothe, house or employ anyone.

"Knowing how tough, violent and anti-social Ted was—having totally rejected society and everyone—to have him turn completely around—he's patient, soft-spoken, a good listener—indicates to me a real sensitivity to people and their problems.

"Ted has been unfairly criticized by people who should know better; yet he always finds an explanation for their hostility—this is how I know his reformation is very deep and not a facade."

A former member of the State Legislature, Davis is particularly sensitive to the accomplishments of the CPLs. "More social legislation passed this year than we've had in years," he points out. Through fact-finding, reasoning with legislators, monitoring bills—in effect, working as unpaid lobbyists—the CPLs enabled the voices of the poor to be heard effectively for the first time. For those who criticize the concept, Davis has one question: "Would you rather they marched on the Capitol?"

One member of the SEOO staff, Jacqueline McClain, believes her supervisor's lack of administrative experience has been compensated for by his "tremendous capacity to deal with people and to work long hours without becoming frustrated." She readily admits, however, that her objectivity may be in question since she has just married her boss. The new Mrs. Winters, who transferred to another division of state government following their wedding, sees a special significance in her husband's career:

"The State Economic Opportunity Office really symbolizes the mission of OEO. Looking at Ted, the poor actually can say, 'If it can happen to him, there's a chance for me— there *is* such a thing as opportunity.' "

A Conceptual Orientation To Curriculum Design

What is offered herein, is not a package of resolutions to the problems of adult educational settings, but rather an orientation to that resolution. The source of this orientation is a paper by Boone, Quinn and Dolan (1967) designed to identify several variables important in any scheme of planning, implementing, and evaluating educational programs. The most important singular feature of this curriculum design is its conceptual and theoretical foundation. While it is primarily based upon research findings from the behavioral sciences, and therefore dependent upon the accuracy of this research, empirical evidence supports its relevancy and thoroughness. It has been utilized extensively, by various adult education agencies, with considerable success.

Phase I - Formulating the Organization Framework

The social system of corrections/rehabilitation is the initial focus of attention. Since educational programs are the result of purposive action by specific organizations, and operate within the confines of established social systems, any action taken by these organizations must be made with full understanding of the general system in which they intend to act, the sub-systems of that system, and the external systems which have a vested interest. The overall objective of this phase is to provide through the specification of pertinent concerns, the framework through which the individuals within the correctional/rehabilitation system may better understand their organization. The elements, processes, and results of the organization to be analyzed are:

(1) the philosophical and social foundations

(2) the ends and objectives

(3) the definition of roles, structuring of job groups, and the overall organizational structure

(4) the policies, procedures, and practices

(5) the communication processes

(6) the staff development programs

(7) the internal and/or external coordination.

Phase II - Adapting the Program to the Several Organizational Levels

The purpose of this phase is to specify certain activities that may be needed to facilitate the integration of the overall organizational aims, elements, processes, and results with those aims, elements, processes and results of the organizational sub-divisions, especially those expected to activate and operationalize the planned curriculum. This phase may be referred to as the streamlining phase, for its specific aim is to bring about an organizational course direction relative to the plan

of operation. Specific aspects to be analyzed here are:

(1) the formal and informal functions and objectives of the subdivisions with emphasis on current leadership patterns, power relations and beliefs and sentiments

(2) current patterns of internal communications

(3) current patterns of conflict resolution

(4) the hierarchial arrangement of the subdivisions within the total organizational structure and their relationships, with an emphasis on the analysis of past relations, projects, and activities

(5) an analysis of the effect of consequential changes necessitated by changes in other organizational subdivisions.

Phase III - Organizing the Human Resources (at the Operational Level) Needed to Plan an Educational Program that is Related to the Needs of the Clients

The purpose of this phase is to provide several guidelines to assist the solicitation and mobilization of lay leaders. The idea of lay leader utilization is often viewed with jaundiced eye. Social institutions have been "burned" in the past by the intense actions of the fanatical fringe, whether political, social, or moralistic in purpose. However, there are many competent individuals eager to assist in designing and implementing programs of inmate rehabilitation. Corrections must become aware that if the image of the rehabilitated inmate is to be accepted, it must be accepted by those in positions to foster this idea. Who employs ex-offenders? Who has the greatest effect on their success or failure in the outside world? We must begin with a program of soliciting and cultivating responsible citizens, who by their involvement in the rehabilitation process, may influence others into accepting the ex-convict into the "straight" society.

To assist in the mobilization of these individuals the following specific concerns should be analyzed: (1) the overall concept of lay leader involvement, (2) determination of the roles of the lay leaders in the decision making process, that is, legitimation and authority, (3) formation of lay leader advisory groups, cognizant of their ability to set into motion the necessary public support for the program, and (4) methods of maintaining lay leader systems with emphasis on their continued involvement.

Phase IV - The Planning of the Decision Making Process at the Operation Level

The overall purpose of this phase is the development of a plan for decision making for those individuals at the operational level that would bring about correct decisions. Correct decisions are defined as

those most accurately reflecting the needs of the target group, but within the scope of resources of the organization. A secondary purpose of this phase is to reemphasize the necessity of effective and efficient activity at the operational level. Awareness of and involvement in the decision-making process would consequently cause individuals to more consciously maintain the objectives of the program. The specific concerns and activities associated with decision-making are: (1) preliminary definition of the problem, needs and opportunities; (2) data collection; (3) analysis and interpretation of the data, (4) redefinition of the problems, needs, and opportunities, (5) establishing program priorities; (6) formulating objectives, (7) developing alternative solutions; (8) evaluating alternatives; and (9) selecting a course of action from among the alternatives.

Phase V - The Planned Program Prospectus

The purpose of this phase is the integration of the decisions generated in Phase IV into a comprehensive plan or prospectus. Specific concerns of Phase V are: (1) statements related to the functions of the planned program (goals, philosophies, and objectives); (2) situational statements of the problems, needs, (3) statement of the objectives in relation to the problem, and (4) general plans for implementing program objectives. The resultant prospectus will provide tangible evidence of the scope and intensity of prescribed approaches to both major and minor problematic situations.

One only needs to review an article by N. A. Fisher (1970) in order to gain insight into the reason why many educational programs in correctional institutions have failed their mission. The time is now--there must be a renewed definition of goals and objectives, a willingness to depart from traditional methods of institution, a concerted effort at securing adequate funds for the support of the program, and probably the most important, the recruitment of good teachers.

Phase VI - Operationalizing the Planned Program

This phase has a dual purpose. The first is the development of relevant guidelines based upon (1) the people affected, (2) how people learn, and (3) the subject matter conveyed. The second purpose is the translation of these conceptual guidelines into an operational plan. Specifically, Phase VI covers the development of plans of work, teaching plans, and instructional units inclusive of: (a) delineation of micro problems of the target population from (1) the learners themselves, (2) representatives of contemporary society, (3) subject matter specialist, (4) representatives of his culture; (b) specification of teaching level objectives--cognitive, affective, psychomotor--based upon entry level behaviors; (c) selection and organization of learning experiences that (1) stimulate motivation and continued satisfaction, (2) indicate inadequacy of present performance, (3) establish standards of adequate behavior, (4) provide for practice of appropriate behavior, (5) reinforce and guide desired behavior, (6) set up sequence of appropriate experiences; and (d) instructional evaluation in terms of how the instruction, relative to the objectives, species the situations and samples the behavior of the learners.

It is at this stage that the curriculum plan becomes most vulnerable. Inept or misguided instruction can easily destroy the program. For this reason, it appears necessary that a few brief comments be made.

Previously, some mention was made in reference to the primary motivation of inmates, i.e., release. There are other motivations, much more deeply rooted in the adult personality, which must be realized if permanent behavioral change is the aim of the program. Burton (1958) provides us with some assistance when he cites: (1) the learner is a unitary, integrating whole, (2) he seeks to maintain equilibrium, (3) he is goal seeking, i.e., pursues goals that satisfy his needs, (4) he is an active, behaving, and exploratory individual, (5) he has a unique pattern and rhythm, a life style, a particular personality with a personal set of aims, values, and social habits and of special interest to correctional programs, (6) the learner has a level of maturity that may be at odds with the various standards or expectations of society.

The most important task of any instructor is in selecting learning activities that will satisfy these needs. To facilitate understanding of the selection of these learning activities, Burton presents the other half of the coin with several comments on the learning process.

1. The learning process is experiencing, doing, reacting, and undergoing. Therefore, <u>active</u> participation by the learner is necessary.

2. Responses during the learning processes are modified by their <u>consequences</u>.

3. The learning process must take place in a <u>realistic</u> and satisfying environment. Coercion or domination must be avoided.

4. The learner will persist so long as the instruction is geared to his maturity and past experiences.

From these comments, it would appear that the keys to any good learning situation would be those that allow: (1) ample student activity, (2) opportunities to exhibit behavior, (3) realistic environments, and (4) are based upon his particular set of needs.

Awareness of these concepts, however, cannot be equated with methodology of instruction. While they do provide the conceptual bases for an instructional approach, they do not easily lend themselves to the necessary development of an overall orientation to instructional methodology.

There appears to be at least one instructional design that meets all requirements, that is, the Learning-Oriented Systems approach by Roueche and Herrscher (1970). The attractiveness of the approach lies not only in its inclusion of relevant concepts, but in its openess to evaluation. While scope of this paper does not allow a thorough examination of the systems approach, inclusion of its major characteristics is warranted.

The Learning-Oriented Systems

A. Instructional technology undergirds the entire program.

B. The instruction is individualized.

C. Teaching may be assumed only in relation to the learning which has resulted.

D. Objectives are specific and measurable.

E. Media are used not as supplements, but as components selected on the basis of their potential to cause learning.

F. Content is chosen on the basis of its relevance.

G. Testing is used to assess teaching.

H. The student is the actor, the teacher is the manager. Students participate in the selection of objectives, content, and learning experiences.

I. The environment is characterized by flexibility.

These characteristics become all the more notable when compared to the prevailing approach used in most classrooms today. Seldom is any logical systemized approach employed. Instruction is usually geared to the group and within heavily controlled conditions. Teacher presentations are equated with learning. Objectives are often without logic, and are usually vague and general. Audio-visuals, if used at all, are considered aids to assist other methods of instruction. The content of the subject matter is usually chosen for its "essential knowledge" without regard to the current society or culture. For the most part, the teacher is the sole actor, the students are expected to be passive, and not involve themselves in the selection of objectives, subject matter content or learning experiences. Lastly, environments are often regulated and controlled to a suffocating degree, with little mental or physical flexibility.

In an effort to clear up one last concept, the following definition of the term "subject matter" is offered. The reason for this redefinition appears obvious. All too often when soliciting definitions to this term, responses are returned relating to English, or history, or calculus, or something like that.

Subject Matter Conveyed

The term subject matter may be described as a specific portion of the cumulative data of a particular academic discipline, which when structured and presented to an individual in a learning situation, will cause positive changes in his current repertoire of knowledge, values, and skills. Irregardless of the content of the subject matter, the only value in presenting a particular subject topic to an individual is in that topic's ability to cause learning, i.e., behavioral change, to occur.

In summary, what is most needed, is a logical foundations for decisions made regarding instructional guidelines and thereby insure their compatibility with (1) the needs of the inmates, and (2) correct research on instructional methodology and subject-matter content.

Phase VII - Program Evaluation

The evaluation phase is designed to focus attention upon the efficiency and effectiveness of the organization in attaining its objectives, and the program as it affects the organization. With the objectives in mind, analysis would be made of: (1) the program inputs; (2) the processes employed, and (3) the results. The evaluation phase would also be the last link in the overall feedback process.

In conclusion, the preceding curriculum plan outlined a number of concepts, the understanding of which is deemed necessary to the successful design and implementation of educational programs. The overall scope and purpose of this paper prohibited a more in-depth review. It is anticipated, nonetheless, that it will be of some assistance in guiding the thoughts and activities of those individuals responsible for educational programs in correctional institutions.

References

Baity, D. Prison camp inmates are full-time students at Gaston College. Charlotte Observer, January 13, 1972.

Boone, E., Quinn, E., & Dolan, R. A conceptual schema of the programming process in the complex adult education organization with special emphasis on its sociological aspects. Raleigh: North Carolina State University, 1967.

Burton, W. Basic principles in a good teaching-learning situation. Phi Delta Kappan, XXXIX (6).

Fisher, N. History of correctional education. In T. A. Ryan (Ed.), Collection of papers prepared for 1970 national seminars. Honolulu: Education Research and Development Center, University of Hawaii, 1970.

Roueche, J., & Herrscher, B. Junior college instruction: Selected academic readings. New York: McGraw Hill, 1970.

Wright, D. How one man came back. Opportunity, 1971, 1, 2-4.

AN ADULT BASIC EDUCATION CURRICULUM

Thomas M. Trujillo
New Mexico Department of Education
Santa Fe, New Mexico

Perhaps the most desirable objective in adult basic education is to prepare the adult to function at his fullest capacity and thereby take his rightful place in an everchanging society. Time and again the need for adult basic education has been emphasized in order to accomplish this objective. Vocational training, higher education and other avenues for social and economic advancement have little meaning for those who have yet to learn the basic skills. As our knowledge and experience in adult education increases, we find that it is not enough to emphasize only the basic skill areas. It is also necessary to include in our curricula, those activities which help the adult understand his role in society. A total education must include the development of a new life perspective, an awareness of family and social responsibilities, and the changing of attitudes from those of defeatism and rejection to those of confidence and leadership.

In the development of a curriculum for adult basic education, one must first accept the premise that traditional methods and techniques do not effectively work in adult basic education classes. For the most part, the larger majority of basic education students are school dropouts. In a recent study (Trujillo, 1970) it was shown that most of these have dropped out of school because they were not able to function in a regular school setting. As a result, most of them simply did not like school. This alone would indicate a need for a new direction--one that is designed to meet individual needs at all levels of ability and in all subject areas.

Many studies have identified the basic characteristics of an adult student. Almost all of these refer to the physical, emotional, economic, and social characteristics which set them apart from the typical student. All of these characteristics must be taken into consideration when developing a curriculum for adults. The following twelve characteristics are typical of those identified:

1. Attendance is usually voluntary and conditioned by a practical motive; the adult is free to walk out if he feels that he is not getting what he wants.

2. Students bring a mature, rich experience to class which conditions the learning by making it easier at times, but imperative that new facts be related to this background of experience.

3. Learning is conditioned by the general decline in learning capacity. The majority of adult students fall in the 35-45

age range. One must be cognizant of the fact that the adult student must invest more effort in his attempts to learn than younger students, all other things being equal.

4. The adult is always ready to learn if the material presented bears upon his needs.

5. The adult is not content to be a spectator; he needs to participate in the activities frequently during a session.

6. The adult feels a sense of hurry, a shortness of time in which to learn; he is an impatient learner.

7. The adult must acquire and retain a high degree of self-confidence and must have a feeling of success to a far greater degree than children.

8. The wide variations in the experience, age, and education of adults accentuates the role played by individual differences in adult education.

9. The educational efforts being made by the adult student are almost always secondary to his other efforts such as: maintaining a livelihood, paying his bills, and providing for his family.

10. Since the adult usually has a ready-made motive or purpose when he comes to class, learning is of greater consequence and more worthwhile to him.

11. The adult has handicaps which he must overcome: physiological changes, psychological handicaps of prejudice, set patterns and habits, fatigue resulting from a full day's work prior to class.

12. The adult needs to see an immediate benefit to himself in what he learns.

Adults in basic education, just like other learners, need to see a reason for learning if they are to gain much from the opportunities provided by adult programs. Somehow they must see that this experience will fit into and enrich their everyday living. To be meaningful, education has to meet the individual's needs. It will be the intent of this report to describe a procedure by which individual needs can be identified and which will allow the instructor to prescribe a plan of action which will meet these individual needs.

Curriculum Content

Traditionally, educators have recognized one's level of ability by grouping students chronologically. It is not uncommon to visit a classroom and find all twenty or thirty students reading the same book or

working on the same math problem. It would indeed be a strange coincidence if all of these students were at the same level of ability or could learn at the same rate. In spite of the fact that most educators recognize individual differences, many still feel an obligation to complete such and such a textbook before the end of the semester. In adult basic education this must not be the case. Most adult education programs are blessed with the fact that attendance is not mandatory. As a result, educators are forced to be innovative or suffer the consequence of losing all of their students.

Perhaps the first step an adult educator should take in developing a curriculum is to forget about grade levels. Instead, he should identify specific skills at varying levels of ability. These skills should be put in context with the needs relevant to each individual. For example, it is not enough to say that an individual should read and write at the 6th grade level. It would be much better to state such objectives as: a student can fill out an application blank; a student can compare and analyze newspaper ads; a student can use reading to get information; a student can read and understand information pertaining to bills and statements.

These objectives may be termed as performance level objectives and should be developed by each instructor in any number of subject areas. The following charts demonstrate an example of developing performance level objectives in the areas of money, written communication, and reading. By no means is it suggested that these three examples are complete. Obviously, there are hundreds of other desirable performance level objectives that could be described in each area. It is the task of the instructor to select those objectives which best meet the need of each individual. Obviously, not all objectives listed would be desirable for all students. Hopefully, these three examples will serve as a means to demonstrate a principle.

Performance Level Objectives for Adult Basic Education

Subject	Basic	Intermediate	Advanced
MONEY	1. Can make change up to $5. 2. Know what a bank is for. 3. Understands the relative value of common things. 4. Knows the different multiplication signs, i.e., of, times, as much as. 5. Is able to read certain number symbols.	1. Can write checks & deposits. 2. Understands coins vs. currency. 3. Can make withdrawal slips. 4. Can determine unit prices. 5. Can purchase a fraction of a unit. 6. Distinguishes between discounts and percents. 7. Understands the value of money.	1. Uses thrift in buying. 2. Can budget household expenditures. 3. Understands upkeep and repair costs. 4. Understands cash & sale discounts. 5. Understands wages vs. salary. 6. Understands the mechanics of taxes, i.e., sales, property, and payroll. 7. Understands retirement benefits & social security. 8. Understands borrowing--i.e., credit union vs. loan company. 9. Can figure the cost of installment buying. 10. Knows how to invest in stocks and bonds. 11. Can figure the costs os shipping goods.

Performance Level Objectives for Adult Basic Education

Subject	Basic	Intermediate	Advanced
WRITTEN COMMUNICATION	1. Has adequate motor control for writing. 2. Writes his name. 3. Copies one or two complete sentences.	1. Writes legibly in cursive writing. 2. Uses adequate punctuation. 3. Writes friendly notes and addresses them correctly. 4. Fills in complete date. 5. Uses abbreviations found in his experience (Dr., St., Mr., Mrs.) 6. Can alphabetize. 7. Writes phone numbers, addresses, age, and birthdays. 8. Writes notes when necessary. 9. Has usable written vocabulary. 10. Copies correctly. 11. Writes a good sentence. 12. Writes a complete paragraph. 13. Fills out application forms correctly. 14. Can order by mail.	1. Can take and record messages. 2. Can fill out order blanks. 3. Can record inventory records. 4. Can make out usable shopping lists. 5. Can express personal opinions.

Performance Level Objectives for Adult Basic Education

Subject	Basic	Intermediate	Advanced
READING	1. Knows most beginning consonant sounds. 2. Recognizes common endings ("s", "ed", "ing"). 3. "Reads" experience charts. 4. "Reads" work sheets. 5. Reads the letters of the alphabet. 6. Has appropriate word attack skills & sight vocabulary for reading. 7. Uses visual discrimination for likenesses, differences, association.	1. Establishes an adequate word sight vocabulary. 2. Uses phonetic skills. 3. Uses context clues. 4. Uses prefixes, suffixes, and root words. 5. Can develop and read experience charts. 6. Has adequate intermediate reading skills. 7. Has an elementary grasp of newspaper reading & can read a newspaper to obtain information. 8. Shows some interest in pleasure reading. 9. Can develop & read detailed experience charts. 10. Can use reading to get information. 11. Understands and can use the information.	1. Can read and understand information pertaining to bills and statements. 2. Can read and understand simple sales contracts. 3. Can read and use simple reference materials. 4. Reads for entertainment. 5. Reads critically.

Assessing Individual Skill Needs

There are many pros and cons regarding the testing of adult basic education students. Many of the criticisms are valid. For example, it would not be appropriate to subject him to a comprehensive test the first week he attends class. Very often a new student is lost during this crucial period of adjustment if he is threatened by such a negative hurdle. Nevertheless, it is equally as crucial to place this student in a general level commensurate with his ability. After a student is comfortable in his surroundings, a more comprehensive exam may be administered.

There are many techniques for the initial placement of students. Many publishing companies have developed placement tests which require less than one-half hour to administer. However, the simplest and most effective is a device which can be developed by each program. This is a concept initiated by the University of Texas as part of a regionally developed teacher training kit. Very briefly, an enrollment form is given to each student to fill out. The form is designed in a sequence of difficulty in which the new student is required to demonstrate his reading and writing ability. The first questions are stated very simply and can be answered with one or two words. For example: Are you married? Do you have any children? How many children do you have? Write your name. Write you home address. As the form progresses, the questions become more difficult. For example: Do you have a means of transportation to get to class? Would you be willing to provide transportation for other students in your area? The last questions require the student to do some comprehensive thinking and put these thoughts down in a narrative form. For example: Why do you wish to attend adult basic education classes? What are some of your areas of interest?

Whenever possible a teacher or teacher aide should work with the student in filling out the form. As soon as the student experiences difficulty in answering the questions, the teacher may provide assistance. If necessary, ask him the questions and fill out the form for him. Besides the fact the tacher has some valuable information about the student, he should be able to place him into a general level of ability.

Once the student has adjusted to the classroom environment, it is then necessary to identify specific skill deficiencies. Again there are many publishing companies which have developed achievement tests for adults. It is recommended that a test which identifies specific skill areas be used. The test most often used in New Mexico is "The Tests of Adult Basic Education," published by the California Test Bureau. This test provides the instructor with a very simple means of identifying specific skill deficiencies. This series also contains three levels of difficulty in several subject areas. It is further recommended that the results of this test be made available to the student. In fact, it would be desirable to discuss each section, pointing out deficiencies and areas of expertise. The test should be used as a diagnostic tool and used by both teacher and student in developing a plan of action.

The Learning Lab

The Oklahoma State Division of Adult Basic Education (Timken & Harrison, 1970) describe the learning lab as basically an area (building, room, rooms) where facilities, materials, personnel and students come together to service the needs of each individual adult. On a scheduled or unscheduled basis, it may be used by one adult for enrichment, another for reinforcement and another for remediation. The lab should contain the necessary equipment and instructional materials which will allow the student to learn by himself or in small groups those specific skills necessary to meet his educational objectives. The individualized instruction concept is developed upon the enrollee's stated objectives or goals. The individual's ability is assessed by means of a standardized achievement test as described earlier. Then a meaningful curriculum is planned based on the student's reason for entering school, ability, vocational status or desires, and general interests.

In the learning lab the role of the teacher takes on a new light. The teacher is no longer the super-figure standing in front of the class lecturing to those who may or may not have any interest in what he has to say. Instead, the teacher's role may be compared to that of a diagnostician. He simply identifies students' needs; breaks these needs down into specific performance level objectives; and, via the learning lab, he prescribes an individualized approach to meeting these needs.

This very simple breakdown infers that the teacher's role is nonpersonal. However, this is not the case. Individualized instruction does not mean that the teacher is no longer needed. Instead of being the primary giver of information, he may be considered to be the facilitator and education decision-maker, counselor, superviser or test administrator. He must establish rapport and see that the student is working toward his primary objective.

Materials for the Learning Lab

There are many sources of materials for a learning lab. Many of them are good and many of them not so good. It would be desirable to have a completely comprehensive lab but the limitation of funding usually prevents this. Because of this wide selection of materials and because of limited funding, it is important to be selective in choosing your instructional materials. Perhaps the most important rule of thumb to follow is to choose only those materials which have been designed for adult use. It is indeed sad to walk into a classroom and see adults reading The Cookie Tree, or using some 1920 vintage 5th grade workbook discarded by the public schools.

The learning lab should contain self-instruction, programmed materials. There are many self-contained instructional kits on the market. They found in almost all subject areas at all levels of ability. Because no one kit covers all elements of a given subject and because no two individuals learn the same way, it is recommended that you have more than

one kit available for each subject at each level.

The needs and size of a program would determine the types and number of kits to be purchased. For example, if there are only a handful of G.E.D. prep students, it would be inadvisable to purchase several G.E.D. prep kits. On the other hand, if a program has a large enrollment in English as a Second Language or basic reading, several sources should be included in the lab.

In a study conducted by Mr. Philip Felix (1972) a flow chart listing programmed kits was developed in several areas of adult basic education. The following is a sample of this study which identifies learning lab materials in the area of English as a Second Language. Charts similar to these should be developed for the areas of reading, oral communication, mathematics, vocational education, GED prep.

	BASIC	INTERMEDIATE	ADVANCED	COMPONENTS	APPROX. COST	SOURCE
ENGLISH AS A SECOND LANGUAGE	ENGLISH: YOUR NEW LANGUAGE			15 sets of 2 texts tapes, records flash cards, etc.	$220.00	Silver-Burdett
	ENGLISH 900			10 sets of 6 texts 10 sets of 6 workbooks 180 tapes	675.00	Collier-MacMillan
	INTENSIVE COURSE IN ENGLISH			10 sets of 2 texts 100 tapes	565.00	English Lan. Services
	3R ORIENTATION IN AMERICAN ENGLISH			10 sets of 3 texts 4 workbooks 3 tapebooks, 10 sets of 2 readers, 15 cassettes	250.00	American Express (based on 3 levels)
	LADO ENGLISH SERIES OR MODERN AMERICAN ENGLISH SERIES			10 sets of 6 texts & workbooks, 6 sets of posters, 6 sets of tapes, etc.	675.00	Regents (S & S)
	LEARNING TO USE ENGLISH			10 sets of 2 books manual, 10 tapes	95.00	Regents (S & S)
	INGLES PRACTICO SIN MAESTRO OR INVITACION AL INGLES			10 sets of 1 text 4 cassettes	37.50	Regents (S & S)
	LANGUAGE MASTER PROGRAM			Hardware & Pre-recorded cards @ $35 per set	250.00	Bell and Howell
	LEARNING ENGLISH THROUGH TYPE-WRITING			10 sets of 1 text (supplementary)	35.00	English Lang. Services

Supplementary materials available from many sources:
Regents Publishing Co., Steck-Vaughn, English Language Services.

Once a lab has been established the instructor or lab coordinator should make a very comprehensive study of the available materials. Each of the specific concepts contained in the materials should be identified and evaluated. Without this detailed information, the learning lab will not work.

If possible, this information should be cataloged in a cross-reference index. For example, if the achievement test identifies a deficiency in capitalization or word numbers, a teacher could refer a student to only that portion of a kit that deals with that subject. Hopefully, there should be more than one reference source in the event that the first source did not fully teach the concept.

Obviously, the learning lab has many more aspects to be considered. The limitations of this report prevent a detailed description. It is suggested that other resources be consulted before undertaking such a project. At the end of this report is a bibliography of suggested references for the learning lab concept.

Conclusion

The title of this report is misleading. There is no such thing as a curriculum for adult basic education. Each program, each individual, suggests differences which prevent the development of a general curriculum. If anything, such a curriculum would have to be so general that it ould lose its effectiveness upon application.

The content of this report is nothing more than a process, a single method which has proven to be effective. In any event, it is up to each individual instructor to assess his students' needs and then plan accordingly.

References

Bernardoni, C. Outcomes chart for ABE. Albuquerque: University of New Mexico, 1971.

Felix, P. Instructional materials for an ABE learning lab. Santa Fe: New Mexico Department of Education, 1972.

Tanen, S. The adult education student. Santa Fe: New Mexico Department of Education, 1970.

Timkin, J., & Harrison, M. Adult basic and continuing education through Oklahoma learning centers. Oklahoma City: Oklahoma State Department of Education, 1970.

Trujillo, T. An inquiry into the effects of goals in the motivation of adult students. Santa Fe: New Mexico Department of Education, 1970.

Trujillo, T. Personal growth curriculum for adult basic education. Santa Fe: New Mexico Department of Education, 1970.

Bibliography of Texts on Adult Learning Centers and IPI

C 48	PROGRAMMED INSTRUCTION...IN ABE	North Carolina State	'71
C 49	HOW TO SELECT & EVALUATE P.I. MATERIALS	" " "	'71
C 50	FINAL REPORT -IPI- NEVADA	Research for Better Schools	'71
C 51	DRAPER REPORT: P.I. IN CORRECTIONS		'68-70
C 56	ADULT LEARNING LABORATORY	Cincinnati PS	'70
Nev1	APPLICATION OF IPI TO ABE	Nevada	'70
NJ 4	ABE LEARNING CENTERS	New Jersey	'70
OH 3	THE LEARNING LAB IN ABE	Ohio	'69
OK 2	ABE THROUGH LEARNING CENTERS	Oklahoma	'70
Tex3	HOW TO ESTABLISH AN ADULT LEARNING CENTER	Texas	'71
Tex4	INSTRUCTIONAL PROGRESS IN ALC'S	Texas	'71
G 24	HOW TO USE P.I. IN THE CLASSROOM		'67
	EFFECTIVE TEACHING WITH P.I.	Behavioral Research Lab	'69
B 14	INTRODUCING THE IPI SYSTEM ESTABLISHING THE IPI SYSTEM OPERATING THE IPI SYSTEM PRESCRIBING CATALOG FOR THE IPI SYSTEM COMPLETE TESTING PROGRAM FOR THE IPI SYSTEM	Rehabilitation Research Foundation	'71

ABE = Adult Basic Education
ALC = Adult Learning Center (Laboratory)
IPI = Individual Prescribed Instruction
PI = Programmed Instruction

CURRICULUM DESIGN AND ORGANIZATION: A NEW LOOK

John K. Sherk, Jr.
University of Missouri
Kansas City, Missouri

Introduction

Anthony Burgess's striking novel, A Clockwork Orange, or its filmed portrayal, should be required reading and/or viewing for all prison educators. There are several reasons why this is true. One reason is that it provides a glimpse into the future of society in which the current trends towards lawlessness and violence are shown in their full flower. It is a society in which the average citizen has lost most of his freedom because he lives in constant fear for his safety; in this regard, the whole society is transformed into a prison alternately ruled by lawless brutes and the counter-forces of an equally brutal law and order establishment. Between these enormously evil forces, the citizen finds himself as helpless as a fox pursued by hounds and hunters. Another reason for knowing this book is because it portrays a method of handling society's chronic offenders which differs markedly from those we use today. The novelist indicates what might happen to humans if our current practices in corrections are not applied more skillfully so as to better demonstrate that they can be effective in rehabilitating the lives of offenders.

Perhaps in the decade of the 70's we have our last opportunity to prove that we can rehabilitate offenders using gentle and humane methods, for it is clear to us that crime and violence have badly torn the fabric of our society. Public confidence in the efficacy of rehabilitation and education has eroded in recent years. The people of this nation are inclined to be impatient and impetuous. There is a danger that our national mood may turn repressive and reactionary, resulting in abandonment of restrained and humane treatment of prisoners.

Educators base their practice upon humanitarian values, for the most part. Education in corrections should be based on civil as well as individual rights including the right to decline education and the right to maintain the freedom of spirit and qualities of individuality which allow each person to be unique.

Finally, it goes without saying that education in corrections must be made to succeed against great odds. Programs have always been underfinanced. They probably will continue to be poorly supported from the financial viewpoint.

It will require many skillful, well-trained teachers working against severe handicaps in prisons all across the nation to do the job. It will be the belief in the worth of individuals behind bars which will sustain

these teachers in their work. If we lose faith in our ability to change these individuals through education, there are those waiting who are willing to apply harsher alternatives in order to get the job done.

The essential element in overcoming these odds against which we are working is "vision." It is the intangible yet very real vision the teacher has of the goal, the process, and the implementation of the day-to-day program which will prove successful. It is hoped that this paper can be part of that process of developing "vision."

The Problem

Typical adult basic education programs teach reading, writing, arithmetic, and other so-called "survival skills" such as consumer education and how to fill out applications for menial jobs. The position taken in this paper is that such training is inadequate because it tends to deal with only the most superficial aspects of life and work. It objective is not to secure the "right to life, liberty, and the pursuit of happiness," but to relieve the tax-paying public of the financial responsibility for those who cannot manage to survive. The result that such education achieves is often to arrest the educational development of an individual at the so-called "survival level." As it turns out, mere survival becomes a full-time job, and, this, as a central focus of life, precludes moving to a richer quality of life in all respects. The appropriate thrust of our corrections education programs should be to challenge each individual to his optimal capabilities. A simple program of re-teaching basic tool subjects will not provide sufficient opportunity for individuals to achieve their optimal capabilities.

The remainder of this paper will outline the components of a curriculum which could, if implemented, provide a better chance for the reclamation of the minds and hearts of those in prison.

Components of a Comprehensive Adult Basic Education Program

Manzo (1971) has outlined the following fundamental needs of the adult of low educational and social status:

I. Language: capability to orally express self clearly and effectively in both the community dialect and the language of the core culture (standard English dialect).

II. Reading and Writing: capability to read and write at least initially on a fourth-fifth reading level; subsequently, opportunity to develop such skills in meaningful social contexts; the use of these skills as a participant in society's system of communications.

III. Culture-Academic Factors: exposure to and training in the essential features of the "core" culture's academic and

social heritage.

IV. Emotional Solvency: freedom from such maladaptive behaviors as tend to minimize cognitive growth, vocational adjustment, and emotional well-being.

Manzo's statement of needs is useful in this context because it implies that some of the existing components of adult basic education programs can be utilized. Therefore, with some minor changes and some major ones, innovations in present programming can be directed toward the achievement of the optimal capabilities of the learner.

In order to accommodate the learner's needs as outlined above, consideration must be given to redirecting existing and designing new adult basic education program components. Particular emphasis will be placed upon those components which are not now provided in the typical adult basic education curriculum.

The Language Curriculum

Objectives. (1) To improve oral speech patterns in standard English, (2) to enlarge vocabulary--the stock of precise meanings for English words, (3) to develop and refine cognitive skills such as listening, memory, ability to discriminate fact and opinion, inferential thinking, and summarizing and drawing conclusions, (4) to learn to verbalize personal experiences with skill and fluency.

Teacher Role. Thinking is developed primarily through language and interactions with learned individuals. Thus learning in this phase of the adult basic education program will be heavily dependent upon the opportunity permitted by the teacher for the learner to engage in social-intellectual interactions of an oral-nature which will be useful in improving his fund of knowledge and critical thinking skills. Group discussions, games, role-playing in classroom dramatizations, and monologues are types of activities which the teacher will organize and supervise. The teacher will attempt to maximize the verbal interaction between students, guide them in understanding the merits and shortcomings of their statements, and help the students to develop tolerance for new ideas and expressed ideas different from the ones they hold. It is to be emphasized that this is largely group verbal interaction; it probably cannot be accomplished on an individualized basis.

Materials. Aside from listening and vocabulary, there are very few commercial materials prepared specifically for this purpose. However, many materials, printed, recorded, and filmed, would be sufficiently powerful as stimulants for generating discussions. It is really the teacher's task to assemble materials which grow out of the expressed topics of interest of the group, locate suitable material on these topics,

and present them as curricular materials areound which oral-aural experiences are organized for the enhancement of language skills in the class.

Evaluation. There are several standardized instruments which purport to measure quality and quantity in verbal interaction. However, these require time and a trained evaluator. For purposes of simplicity, perhaps audio recording excerpts from several sessions spaced over time would be sufficient for the teacher and the class to use to decide whether progress in this area of the curriculum had been made.

Basic Skills Curriculum

Objectives. (1) To raise the functioning ability of all inmates in reading and writing above the fifth grade level, the level above which the individual is no longer functionally illiterate, as judged by the larger society, (2) to provide one-to-one or individualized instruction in reading and writing, (3) to place mathematical and computational instruction in the context of meaningful day-to-day situations of which the relevance can easily be seen, (4) to provide maximum flexibility with regard to the pace of learning for each student, (5) to institute a monitoring system in these basic skill areas which insures continuous student growth and a very high percentage of correct responses which tend to maximize opportunity for mastery and strong transfer of learning.

Teacher Role. The teacher's role in this part of the educational program is most fully described in an article by Mocker and Sherk (1970). In essence, in order to function in a program which is designed to meet the objectives as stated, the teacher must come to view himself in a role different from the traditional one. His classroom becomes a "learning center," and he becomes a manager of the learning enterprise, rather than a lecturer or a dispenser of knowledge and information. It is necessary for the teacher to assume this new role because of the wide range of individual differences found in adults in the average classroom. It has been found almost impossible to group students for reading instructions, for example, because there are probably very few adults in any class who have exactly the same reading level and the same instructional needs. In the role as envisioned here, the teacher would conduct the class primarily on an individualized basis, relying heavily upon multi-level self-correcting and self-directing programmed instructional materials. The students in this type of situation actually set their own goals individually, with guidance from the teacher, plan their own schedule and work-load, work independently with frequent individual conferences with the instructor, and when appropriate, submit themselves to evaluations of the learnings which are administered by the instructor and evaluated jointly the instructor and student.

Materials. In the areas of reading and mathematics there is a wide range of instructional material of high quality which is of the type appropriate for this instructional situation. Instead of one textbook for reading, for example, each student would probably be working in a different book suited to his individual needs and interests. Some students might be working in programmed reading texts, some in specific skill-development materials, and some might be reading longer selections such as novels or non-fiction selections. The teacher's responsibility in this regard is to know a wide range of instructional materials, what they purport to teach, know how to put the student at the appropriate place in the instructional sequence, monitor his progress periodically and re-teach anything the student has not himself understood, and then to move the student into progressively more difficult materials as his learning progress takes him there.

Activities. Rarely, if ever, in this part of the program is there group activity. An observer would note that students in this program work independently a great deal of the time. Often instructions for use of certain types of material new to the student are delivered by taped instructions which he listens to and follows. There is little noise. Frequently students are called upon for individual conferences with the teacher. Students move about the room as they need to for their individual programs. Students come to and leave class according to the amount of time they have to spend and on their pre-arranged schedule. Each student keeps his work in a folder which he leaves with the instructor. Both the student and the instructor keep careful daily and weekly records of the student's progress. In the case where students miss their scheduled appearance in class, the instructor follows up by scheduling the student for make-up time. If the student becomes ill or hospitalized, and he is able to do school work, the instructor arranges to have his material sent to him. The student and instructor arranges to have his cycle of goal-setting, record-keeping, evaluating, moving up, establishing new sets of goals.

The Cultural and Academic Curriculum

Objectives. (1) To plan and offer courses in secondary school subjects appropriate for preparing students to pass the GED examinations, (2) to teach students methods of "learning-how-to-learn," (3) to provide courses in ethnic and cultural studies, (4) to provide courses to study in group process and interpersonal relationships, (5) to provide courses of study in modern music, art, cinema, and drama.

Teacher Role. The teacher's role in teaching the traditional high school subjects is understood and probably needs little in the way of elaboration here. However, the reader could probably benefit by referring to a publication by Mocker (1971) describing in specific terms the relevant topics of each curriculum area covered by the GED examination.

In preparation is a publication which links each one of these topics in five areas of the GED curriculum with a specific piece of commercially available instructional material designed to teach or provide practice on that topic.

The essence of this portion of the adult basic education curriculum, however, is in the academic programming which would enable the student to relate to his cultural heritage as well as to understand his potential place in modern society. In addition, learnings related to the student or the individual as a group member should be included. Enrichment of understanding of the world and his place in it can be enhanced by helping the student see the world through the eyes of our modern writers, poets, artist, and playwrights.

The teacher can be of great service in this regard by initiating planning activities with students, and then arranging to have community people who are knowledgeable teach the classes. In virtually every community are people who have knowledge and skills worth teaching. It is not necessary to think of this part of the curriculum in the traditional "semester" sense. Various types of one-shot, short-course arrangements can be made. For example, it may be that a noted poet could be persuaded to conduct a two-day poetry workshop for selected students. Or, perhaps a qualified person could be found who could conduct a series of training sessions in group dynamics for interested students. The idea here is to capitalize upon every opportunity to provide rich learning experiences for the students. In most situations the teacher can become the catalyst for this process. As in other sections of this paper, the suggestion is that the traditional role of the teacher needs to undergo change. Usually this amounts to seeking ways to enrich, broaden, and open up the walls of the classroom so that the student's eyes are opened to the world of possibilities before him.

Materials. One example of how a program might be organized in this area probably will be sufficient to alert the reader to the almost limitless possibilities of assembling materials for this section of the curriculum.

A teacher noticed that many students in the class in American literature were more conversant with and interested in the filmed version of certain literary works than they were with their written counterparts. Therefore, this teacher assembled a film seriees of American classics such as Melville's Moby Dick, Crane's Red Badge of Courage, Dreiser's American Tragedy. The class studied both the book (sometimes in simplified form) and the film made from the book. They then analyzed the literal meanings, themes, character, plot, and style. They studied how the filmmaker adapted the story to fit the screen. This led the class into study of the various aspects of film-making, including the roles of producer, director. The course of study culminated in the class making its own film using its own script, millimeter camera, home-made stage, props, and lighting. The film was shown to other students and was very well received.

Affect and the Adult Student

Objectives. (1) To diagnose maladaptive student behaviors which inhibit learning, (2) to provide counseling for students having such patterns of counterproductive behavior, (3) to implement procedures to neutralize or desensitize these negative responses and to replace them with, or counter-condition them with new, more appropriate responses.

According to Manzo (1971):

> The illiterate adult is one who by definition has failed to succeed--that is, he has failed to fully acquire that which the society considers rudimentary: he cannot read, he is rarely able to hold a job, and he is a financial burden to his fellow citizens. Much of this apparent failure is related not to intellectual deficiencies, not to physical handicap, but is more often due to cultural isolation, prejudice and/or a poor family situation.
>
> The individual raise in such circumstances is often beset with inappropriate emotional responses which have been recently labelled as maladaptive behaviors. As long as these maladaptive--or negative visceral learnings continue there is little hope for him to bring about substantial changes in his learning capabilities.
>
> Realizing this delimma, several behavioral scientists are now experimenting with procedures to neutralize--or desensitize these negative responses, and to replace them with or counter-condition them with new, more appropriate responses.
>
> These techniques are currently not in popular use. However, the major developers of their use in research--Wolpe and Bandura--both claim great success with these techniques and believe that the actual treatments are relatively simple to apply. They do not believe that highly trained clinicians are necessary to do this work. Teachers, nurses, psychologists, and counselors could be, they believe, good 'therapists' for carrying out this vital counter-conditioning therapy.

Currently at UMKC Manzo, Willoughly, and Martin, are studying means these techniques can be used in the school or classroom setting.

Conclusion

Major and minor adjustments need to be made in current adult basic education curriculum areas. Several have been suggested: (1) Language, (2) Basic Skills, (3) Cultural-Academic, (4) Affect. In the individual application of these curriculum components, wide variations will undoubtedly occur. However, these areas are thought to be the irreducible

minimum to be considered by teachers and curriculum designers in planning programs. To do less would be to deny that a man is more than a brain to be crammed with facts; a man is feelings and emotions driven and inhibited by varying levels of motivation and interest, striving, often without vision, for something he does not yet understand. Our curriculum should reflect this "wholeness" of man in its design and organization, and should enable each man to find enlightenment, and therein find himself.

References

Bandura, A. Principles of behavior modification. New York: Holt, Rinehart and Winston, Inc., 1969.

Burgess, A. A clockwork orange. New York: Ballantine Books, 1962.

Manzo, A. V. A comprehensive system for developing adult basic learning skills. Speech presented to joint meeting of the Missouri Adult Education Association and the Missouri Association for Public Continuing and Adult Education. Springfield, Missouri, October 21, 1971. Mimeographed (UMKC).

Mocker, D. From ABE to GED. Jefferson City, Missouri: State Department of Education, 1971.

Mocker, D., & Veri, C. The university of Missouri adult basic education system. Columbia, Missouri: University of Missouri Press, 1969.

Sherk, J. K., & Mocker, D. Developing a learning center in adult basic education. Adult Leadership, 1970, 19, 48-50; 61-62.

Wolpe, J., & Lazarus, A. A. Behavior therapy techniques. London: Pergamon Press, 1966.

CURRICULUM DECISION-MAKING

Ward Sybouts
University of Nebraska
Lincoln, Nebraska

As people who are charged with the responsibility of facilitating learning assume their assigned role (teacher) working with people who have for various reasons been placed in the role of the official learner (student), it becomes clear that the teaching-learning process is a people-to-people function. This does not negate the fact that individuals learn in an environment without the assistance of an officially designated person who occupies the role of teacher. It is often said that "experience is the best teacher," yet we have persisted, and justifiably so, with the belief that learning can be facilitated by a teacher. There is some evidence to suggest we are actually over-playing the idea that the teacher is the primary facilitator of learning, i.e., rather than using a variety of professionally developed, mediated presentations we often revert to the ad libing presentation of the teacher which is known to be generally lacking in many respects. All this implies there are numerous decisions which are to be made by teachers regarding the organization, implementation, and assessment of instruction.

Decisions are continually made about the instructional-learning process. These decisions are made by individuals working within an institutional setting which resides in a given culture at a specified time. Decisions are made under conditions of reality which forbid the possibility of operating in isolation or without regard to the cultural setting. Persons responsible for working within the institutionalized decision-making framework will generally make sounder, more defensible decisions if they thoroughly understand the decision-making process and the various restraints and infringements which are operative within the process.

Decision-Making

There is a traditional or common model for decision-making in our culture which identifies various components. The first step is the identification, recognition, or definition of a problem, need, or objective. Once the need, problem or objective is determined, the second step is to list all possible alternatives, solutions or options. The third and final step is to select one or a combination of the available alternatives or options, and presto, like the script followed by the unerring detective of stage and screen, the problem is solved or the goal is achieved. This model is, in reality, a gross over-simplication of the process. There are a host of influences which are brought to bear upon this model and tend to mask its simplicity or compound it with various encumbrances. When considering the numerous variables involved in the decision-making process, it becomes very clear that the process is not a simple one.

DIAGRAM A

SIMPLE DECISION-MAKING MODEL

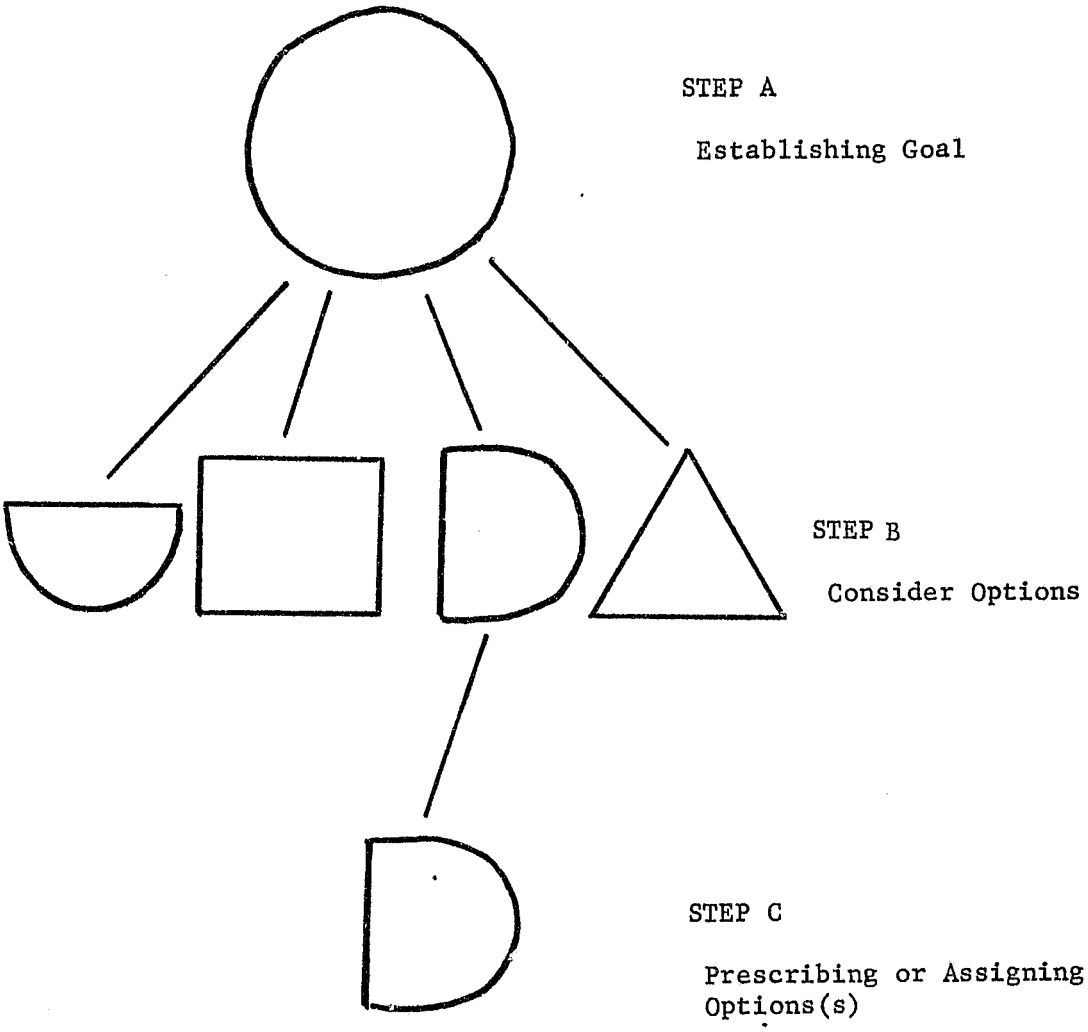

The setting in which decisions are made is an important factor to consider. In our complex society, there is need to recognize the dependency of decisions upon other elements of the culture. In the frontier culture when a housewife wanted to dispose of garbage or trash, there was no concern given when she stepped away from her cabin door and "gave the trash a heave." Quite obviously, modern housewives in an urban setting cannot be permitted the same garbage disposal techniques used by the frontier housewife. As our society becomes more complex, the decision-making process becomes more complex with increased awareness required regarding the dependence of decisions to the cultural setting.

The collective voice of our people, complex and diverse as it is, has been recognized as a basic and most powerful influence in the entire range of decisions which is made. Retired law enforcement officers can remember the prohibition days when the sale of all alcoholic beverages was illegal. Legislators and law enforcement personnel were confronted with an impossible task because the people as a whole were not in agreement with prohibition. The historic experience has demonstrated that the people, which form the base to our decision-making process constitute the most powerful influence and government must operate within the level of acceptance established by the populace. The cultural direction (decision) provides the framework within which the legislative process (decision) functions.

Institutions have been established by government to serve the needs of the people. Institutions such as mental hospitals, prisons, and schools operate as bureaucracies within the framework of the law with certain prescribed limits which have been tested in the courts and which are dependent upon financial controls familiar to all personnel who work in such institutions. Public service institutions have not typically set their own direction or established their own purpose and goals. While there have been outstanding and noted leaders in these institutions who have provided exceptional leadership and brought about significant changes, in most instances it can be argued that changes had to wait until the public became aware of the need for change and was willing to provide needed financial support. The primary effort of personnel who have been charged with the responsibility of directing and operating public institutions has been to make these organizations function efficiently within the limits of their bureaucratic framework and not to try to change to the major direction or purpose which the institution was designed to serve.

Policies are established within the institutions which must comply with the law and which are intended to facilitate the purpose of the organization. In most instances, policies are created by boards of directors or advisors who are charged with no administrative responsibilities. From policy decisions, the administrator independently or through staff involvement and group processes, is able to develop administrative regulations. Within the administrative regulations, members of the staff make their decisions which are consistent with the policies and laws of the state.

Decision-Making Model

The decision-making model, as mentioned previously is often considered as a very simple, three-step process. Some of the considerations which have been omitted from the simple decision-making model are (1) the importance of communications, (2) the psychology of the individual, (3) value systems, (4) bureaucratic limitations, and (5) cultural setting. Quite often these compounding factors are elusive or seem to avoid clear definitions.

A brief consideration of the components of the simple decision-making model may be warranted before considering the compounding factors. The definition of the issue, question, problem or goal is sometimes so obvious it is overlooked. A person can be so engrossed in trying to design a complex solution that he fails to analyze the problem or goal sufficiently to realize it may be a very simple one. In other situations, the problem or goal may turn out to be entirely different than that which was originally perceived.

The identification of alternative solutions to solve a problem or teach an objective is often given too little consideration. Obviously, the more carefully the alternatives or options are chosen, the greater the likelihood for the achievement of desired results. The results can never be better than the best options. There are times when alternatives or options which are listed are in fact not alternatives at all when considering solutions; i.e., if a student is not progressing satisfactorily one might suggest assigning him to a series of learning packages. This would be an option only as long as the needed learning packages were available. Consultation is sometimes very appropriate when considering options. Quite often another person can think of options which may give an entirely new or better potential result. At other times consultation may identify potential dangers or negative results in options previously suggested. The seeking and bringing together of as much information as possible is important toward arriving at the best possible approach on the one hand and the avoidance of unnecessary repercussions or future problems on the other hand.

Types of Decisions for Instructors

Decision-making in an instructional setting places heavy demands upon those responsible for facilitating learning. With the knowledge explosion, the complexity of technology in media, both in and out of the schools, and the multiplicity of sub-cultures within our society, the instructor is now faced with decisions that never once confronted Aristotle. Being an educator today is much more demanding than it was in past generations.

The traditional teacher of the past, yet in recent decades, had a group of learners, a room and a text. The most commonly used instructional approach was for the teacher to lecture (and in many instances we are forced into a stance of over-generosity when we suggest the *ad lib* rambling of some teachers could qualify as a lecture); assign pages from the

The setting in which decisions are made is an important factor to consider. In our complex society, there is need to recognize the dependency of decisions upon other elements of the culture. In the frontier culture when a housewife wanted to dispose of garbage or trash, there was no concern given when she stepped away from her cabin door and "gave the trash a heave." Quite obviously, modern housewives in an urban setting cannot be permitted the same garbage disposal techniques used by the frontier housewife. As our society becomes more complex, the decision-making process becomes more complex with increased awareness required regarding the dependence of decisions to the cultural setting.

The collective voice of our people, complex and diverse as it is, has been recognized as a basic and most powerful influence in the entire range of decisions which is made. Retired law enforcement officers can remember the prohibition days when the sale of all alcoholic beverages was illegal. Legislators and law enforcement personnel were confronted with an impossible task because the people as a whole were not in agreement with prohibition. The historic experience has demonstrated that the people, which form the base to our decision-making process constitute the most powerful influence and government must operate within the level of acceptance established by the populace. The cultural direction (decision) provides the framework within which the legislative process (decision) functions.

Institutions have been established by government to serve the needs of the people. Institutions such as mental hospitals, prisons, and schools operate as bureaucracies within the framework of the law with certain prescribed limits which have been tested in the courts and which are dependent upon financial controls familiar to all personnel who work in such institutions. Public service institutions have not typically set their own direction or established their own purpose and goals. While there have been outstanding and noted leaders in these institutions who have provided exceptional leadership and brought about significant changes, in most instances it can be argued that changes had to wait until the public became aware of the need for change and was willing to provide needed financial support. The primary effort of personnel who have been charged with the responsibility of directing and operating public institutions has been to make these organizations function efficiently within the limits of their bureaucratic framework and not to try to change to the major direction or purpose which the institution was designed to serve.

Policies are established within the institutions which must comply with the law and which are intended to facilitate the purpose of the organization. In most instances, policies are created by boards of directors or advisors who are charged with no administrative responsibilities. From policy decisions, the administrator independently or through staff involvement and group processes, is able to develop administrative regulations. Within the administrative regulations, members of the staff make their decisions which are consistent with the policies and laws of the state.

text; have a "recitation" which consisted of the teacher asking questions derived from text and lecture that required recall type responses from students; and finally to give a guiz (it is also interesting to note that many such quizzes would stump the teacher once they got "cold"). Teaching was active--being a student was generally passive with success being measured by a student's ability to produce a carbon copy of the teacher's answer key at examination time.

The modern, prescriptive teacher demonstrates skills which place him in a close relationship with each individual student, requires diagnostic skills; involves the teacher with prescribing learning activities that facilitate the individual learner to reach clearly defined objectives, evaluates the learner's progress, and finally alters future learning activities as a result of feedback.

Decisions to Recognize Each Individual

In a traditional educational setting we have, as educators, been great verbal advocates of the individual. As educators, we have written and lectured about the importance of serving the needs of each individual learner, but in practice we built schools for middle-class aspiring families with students of average or above average intelligence. Unfortunately, not all youth fit the antiquated, unyielding mold of the typical secondary schools, with the result that literally millions of youth become truant, delinquent and eventually drop out. From the dropouts, and from the graduates, we find those who for various reasons cannot demonstrate behavior acceptable in the eyes of our society and for these we have established still other institutions to serve their (educational) needs. Our actions deny our words of good intent regarding the individual. Put another way, a young person can be an individual as long as he chooses to do his thing as a middle-class, complying student who fits the shape of our school. Our traditional schools have, in spite of all we have said, been group-oriented rather than individual-oriented.

As teachers grow in their ability to move from the traditional style of teaching to one in which the teacher is a diagnostician, prescriber, designer and evaluator, more emphasis can be given to each person in the classroom as an individual. Once the individual student is recognized and becomes actively involved in the learning process, more learning will occur.

Decisions by Group Consensus

Tradition has placed instructors in situations where they typically work alone. In fact, many instructors have demonstrated behavior that has fostered working alone in a situation where the human megaphone could drone on and on, with little or no concern for accountability. We are now able to demonstrate that when teachers work in groups they are able to do a better job of planning, instructing and evaluating.

The kinds of decisions involved in planning and evaluation can be improved when instructors are given an opportunity to work together rather than independently. Instructors often have to develop new techniques and skills to team plan and critique, but once time for planning is recognized and made available for a team of instructors, the quality of instruction can be improved. Teams of instructors can be composed by individuals from different disciplines or by those working in the same field. The ingredients needed for team planning are: (1) instructors who recognize the value of team planning or are willing to explore the possibilities, (2) scheduled time, (3) adequate space and facilities, and (4) a little practice, help or in-service.

Decision-Making in the Instructional Setting

When applying the decision-making process to the instructional setting there are a variety of approaches which can be identified. For purposes of discussion here it will be assumed we will be working with an instructional team whenever possible, that behavioral or performance objectives will be utilized, and that an instructional systems approach will be employed. This does not imply the decision-making process will not work in other instructional settings but does infer that the results from the process are maximized when teams work to establish learning systems for competency based programs (Mager, 1962). It is assumed that instructors working at this level are competent in writing behavioral objectives. If not they should read: Mager, Robert F., Preparing instructional objectives. Palo Alto, California: Fearon Publishers, 1962.

The systems approach involves various steps which enable the instructors to specify and achieve objectives (Barson & Oxhandler, 1965; Buley, 1965; Churchman, 1965; and Smith, 1966).

Setting Goals

The formation of goals and behavioral objectives is the first order of business. Behavioral objectives should be written with sufficient specificity to enable the instructor and the learner to know:

A. what the learner is expected to be able to do;

B. how well, or with what level of proficiency, the behavior is to be performed; and

C. under what conditions the learner is expected to demonstrate his competence.

Defined Measures

The construction of a criterion measure, or pre-test is to follow the establishment of the behavioral goals. In some

instances the pre- and the post-tests may be the same or similar, while in others they may be different, or in separate forms for testing for the same basic knowledge. In all cases, the tests must be designed or chosen to measure behavior specified in the objectives and should be used for a diagnosis of the needs of the learner as well as a measure of his final achievement.

Task Analysis

In order to construct a system that will help the learner achieve specified goals, the instructor will need to analyze and formulate the learning tasks. One simply asks, "What are appropriate learning activities needed for the student to enable him to acquire the desired knowledge, skills, or understandings spelled out in the objectives?" Based on pre-test results it is possible to eliminate the learning activities related to competencies already acquired. Thus it is possible to eliminate unnecessary activities and to select or design options for appropriate practice.

Sequencing

Appropriate practices, once identified, can be sequenced. Sequencing the appropriate practices requires an analysis of what has to be done by the learner (function analysis), what media is most appropriate, practices will best accommodate the needs of the learner. The more options there are available to the learner the greater is the possibility that the most appropriate practice can be identified. Multiple options mean greater opportunities for the learner.

Implementing

Assigning appropriate practices, or implementing the system, for the individual learner or for a group of learners can follow once a sequence is established. It is possible, however, to modify the sequence at any time deemed advisable on the bases of feedback. Throughout the assignment and implementation phase of the system there needs to be sufficient direction, advisement, and resource assistance from the individual instructor to monitor the learner's progress and maintain adequate quality control. At appropriate times within the sequence, and at its conclusion, an evaluation must be made of the learner's progress. The final step within the implementation phase is to update the entire system based on feedback or evaluation, regarding the total <u>process</u> and the final <u>product</u>.

The feedback component of an instructional system is required to give the instructors information for making decisions that will improve the system. Within the feedback sub-system there is the capability of modifying or up-dating the system at any given point. Modifications should be made on the basis of feedback rather than by preferences or impressions. Instructors can make improvements in the system when there is a conscious effort to make assessments of the process as well as an evaluation of the product which is based upon the originally stated goals.

Emphasis on the Individual

Decision-making in an instructional system with prescriptive teaching signifies greater options and opportunities for individualizing instruction than is found in a traditional system. Many approaches to individualizing instruction are currently being advocated. Instructors find, however, that it is extremely difficult to move to a program that provides for individual differences.

It is possible to follow a pattern of progression or transition from group instruction to individualized instruction. It is not necessary, nor has it been proven desirable, to move totally from group instruction to individually-paced learning. It is quite possible to have portions or segments of a program individualized for some or all learners while group instruction proceeds. There may be some units of instruction in which all learners are together at the beginning, and then, at times determined by feedback, some individuals will move into individually prescribed learning activities. This implies there are behavioral objectives common to many or all members of a group and some individuals for whom specific behavioral goals must be written. While some instruction may involve group and individualized activities, other units of learning may be completely individualized and self-pacing. The issue of individualizing instruction does not mean it must be all or nothing at all. It may very well be that the most beneficial learning system is one which incorporates both group learning activities and individually prescribed, self-pacing instruction.

Prescriptive teaching, and the decision to move toward more individualization of instruction, requires multiple options and expanded resources. Traditional teaching (lecture, assigned readings, recitation and testing) dealt with few options and consequently moved more by habit and tradition than by educational decisions. As instructors become involved with individually prescribed programs, they find the more options they have available for learners the more successful they become in their ability to prescribe appropriate learning materials. Without the availability of multiple options the decision-making process is limited with consequent inadequacies in the instructional program which are reflections of those insufficient options.

There are numerous options available to instructors as they make decisions and prescribe appropriate practices for learners. Quite naturally, the variety and number of options are affected by financial limits, space, availability and sophistication of resource centers, and the num-

ber and competence of support personnel. There are numerous options which can be developed by an instructor in spite of perceived restraints. It is quite easy for an instructor to take the position that nothing can be done because certain resources are not available and thus demonstrate by his failure to take action that his decision was to do nothing to improve instruction. Among some of the options that can be designed and developed by instructors are the use of contracting, writing learning packages, and employing various kinds of small group activities. Examples of other options which are commercially developed and which can generally be prescribed by instructors are programmed units or texts, packaged resource and learning units, workbooks, and correspondence courses.

Conclusion

There is a decision-making process in which all instructors are involved. This process can be defined in a variety of ways. In its simplest form it involves (1) a need, goal or problem to be solved; (2) the identification of available options; and (3) the implementation of the prescribed option or the choice of an alternative. To make this three-step decision-making model more complete and operative it is necessary to recognize other compounding features which have a major influence; i.e., the importance of communications, the psychology of the individual, value systems, bureaucratic limitations and the cultural setting. In view of the system in which we work it is also important to recognize the value of the group process in decision-making. Once an instructor understands the decision-making process it is conceivable he will be capable of making the process yield better decisions.

The decison-making model complements the systems approach to instructional design. In a sense, the systems approach to instruction is a model or facilitator for controlled decisions which are channeled toward the accomplishment of prescribed goals. In its simplest form, an instructional system has as a starting place the identification of objectives which are ultimately stated in terms of measurable competencies; the establishment of criteria for measuring a learner's entering knowledge, and finally his achievement or mastery of materials as measured against the stated objectives; the analysis of the learning activities or tasks; sequencing appropriate learning activities; and finally, assigning learning activities and implementing the system with an activated evaluation and feedback loop which enables the manager of the system to up-date or improve the system at any point or any time.

Decision-making within the framework of the systems approach fosters the individualization of instruction. All of the learner's activites do not need to be self-pacing and individualized. There should be a sharing of group learning activities and individually prescribed learning tasks. In order to make decisions which will enhance the learning climate for a student, the instructor must have a resource bank from which he can prescribe the most appropriate learning tasks to an individual learner. A wide variety of teacher-made and commercially prepared materials will be needed in order to proceed with individually prescribed instruction.

Teacher competencies and behaviors will need to be altered from that typically exhibited where lecture, assigned readings, review and testing were employed. In the final analysis the most important ingredient in the decision-making process, the most important and over-riding element of an instructional system, and the single most crucial resource for individualization of instruction--is the teacher.

References

Banathy, B. H. Instructional systems. Palo Alto, California: Fearon Publishers, 1968.

Barson, J., & Oxhandler, E. K. Systems: An approach to improving instruction. Audiovisual Instruction, 1965, 10, 360.

Buley, H. C. Multimedia systems of instruction. Audiovisual Instruction, 1965, 10, 391-392.

Churchman, C. W. On the design of educational systems. Audiovisual Instruction, 1965, 10, 361-365.

Individualization in schools. Washington, D. C.: National School Public Relations Associations, 1971.

Mager, R. F. Preparing instructional objectives. Palo Alto, California: Fearon Publishers, 1962.

Smith, R. G. Controlling the quality of training. Technical Report 65-6. Washington, D. C.: The George Washington University Human Resources Research Office, 1966.

AN ADULT BASIC EDUCATION CURRICULUM

George W. DeBow
Department of Public Instruction
Pierre, South Dakota

Introduction

This paper allows one member of the education team to communicate with many others presently working in the correctional setting as education specialists. It is sincerely hoped that the ideas which are presented in this document make an honest endeavor to convey in a most positive and functional manner the vital importance of attitudinal change which is now before us; this coherent change process can only allow the present basic education curriculum for adults to increase the outreach to those who are saying loud and clear, "Help me!"

The adult basic education curriculum in the correctional setting has perhaps more opportunity to be creative and superbly functional than any model presently known. The students in such a setting are most certainly definitive and real in terms of their needs, thus the challenge of the total rehabilitation process will, in a most comprehensive manner, include the basic educational component. The adult basic education program, as it is known now, must function well and in-depth for an individual to egress into society totally committed to a new life, and, in essence, be the manager of his own ways.

Each person has hangups in terminology and most certainly adult basic education (ABE) ranks high in the polls. In the remainder of this document, the acronym PED replaces ABE for purposes of effect and communication. PED means "Personal Educational Development," and thus in concept is much broader in intent and scope. The idea transforms one's imagery of the narrower ABE syntax to include all ramifications of P.L. 91-230, Adult Education Section, and expanses beyond. PED is a function of education, individually designed for human interaction through the learning process, yet pleasantly involved with group dynamics and self-interdisciplines.

No apologies are made for this document being original, for the mere enjoyment in sharing a few ideas, observations and suggestions is paramount to the learning process. So much fine research and documentation has been accomplished during the length of time the ABE Correctional Project (Ryan, 1970) has been functioning that further research would only be an afterthought in this position paper.

Discovery of a Base Line for PED

Within each correctional institution one can find the first fundamental criterion for PED, namely, the massive human resource. These

people come from such varied backgrounds, with personal problems reflected in their presence in the institution, that there is no question the need for PED is ostensible. The fundamental question, then, would be based upon the order of practical applicants to be found in a delivery system for human need such as an educational curriculum.

The following developmental steps are necessary for full discovery of the base line:

(1) One must develop a critical analysis of institutional personnel through personnel records, internal educational testing service, a descriptive summarization of inmate educational levels, personal skill levels, ethnic background and fundamental sociological data. It is possible to assemble this kind of data on an empirical basis as well as other methods such as testing. Empirical data is very valuable and most certainly highly expressive of an institution's need for educational change; whereas hard statistical data is also desireable for reinforcement or curricular needs. Both forms of information provide the very fundamental basis on which the PED needs may be clearly assessed during the developmental or re-analyzing phase of base line development.

Under no circumstances should sociological data expressed in empirical form be shelved after first usage or discovery; it should be a constant steady companion in the ongoing process as this data becomes a primary sensor reflecting need for change within the correctional setting.

(2) Extreme importance must be placed upon the discovery process of competent professional employees and inmate staff to function with good program development. Inherent with this concept is constant ongoing staff development preparatory to assuming a responsible position in the educational scene. This factor alone will make or break the process of PED development as each member of the institutional staff must be in rhythm with the total process. The staff may, in part, plan how a competent curriculum can be structured, so consequently, in-service development receives high priority in the total curriculum competency.

(3) Awareness at the highest level of correctional administration in an institution is critical for the development of a PED curriculum. Communication is best when it starts from the top and "feedback" is welcomed from all staff levels. One has to constantly remember that the sharing of ideas is where it all begins and if this door is open there is no end to the possibilities for curriculum for personal development. The measure of success in any educational development program is the degree of unity or teamwork which each person, including students, feels during the total process.

(4) The formation and functional use of an inter-disciplinary council for educational development within a correctional setting is very desirable and can be used as a constructive tool to gain personal input to the curricular process from all levels. One must gain input from inmates and staff to be realistically a part of the change process. A fundamental concept of the "rap session" type of confrontation brings,

through council development, the personal and obvious needs of those to be involved, which in theory is the entire population of correctional institutions. Needs do surface and little time is lost in discovering the vital PED base when open communication can be effectively used in a group of this nature. The inter-disciplinary council would contain administrative staff, educational staff, supervisory personnel and a cross section of inmates. This last group is vital in discovering the human resource need.

(5) The best PED curriculum development only comes about when there is a total awareness of available resources, including state and national level foundations and corporate enterprises. It is recommended that one staff member in the institution have the assignment of educational research and development. One would be amazed at the opportunities that pass by which could be utilized in PED. The communications with state and national personnel is essential if any program in curricular development is to come forth. Constant and good public relations in the correctional setting is a key to resource development in cooperation with outside sources.

Fundamental and in concert with the above criteria is the development of the primary concept that man is the critical mass--the problem and the solution--and with this concept in mind one then must uncover the element and level of risk to which educational rehabilitation in the correctional setting can be made. Are you, as a team member, willing to commit sensible yet critical, practical yet prophetic, basic yet philosophical reasoning in a personal, individualized atmosphere so that each human receptor ultimately becomes the benefactor of the PED process and learning?

The Curriculum

After the base line for any educational process is discovered the curriculum then becomes the fundamental key by which one's confidence in the educational system grows; this is true for both the teacher and the student. To further delineate, a competent PED-type curriculum is based on personal growth and involvement; it must motivate, to the highest level, the best of everyone's capacity. One can readily sense, therefore, the intention of PED curriculum; it is a personal thing which not only entails the three R's but an integrate degree of practical and theoretical application by student and staff alike.

The essential core to a functional PED curriculum is the fundamental diagnosis of individual need. Experience should have taught us by now that far too many programs of a basic educational concept have not reached their expectations because of superimposed and preformed diagnoses of individual needs which happen to be minus the feedback from the potential student audience. Many conceptual curricula or special programs disregard personal diagnosis and rely entirely on superficial osmotic need-thought-dream process. This method only has proven to have a shotgun effect. Perhaps more congruent is the philosophy that those programs

designed in an ivory tower are not so structured as to completely involve the many miles of frustration and apathy which the learner has walked. So fundamental is the concept of diagnosis of individual needs as the central curricular core of PED that realistically the program of learning cannot function without it.

How does one diagnose individual need other than developing a consistent pre-educational counseling system in which congruent diagnostic procedures have their origin consistent with the individual correctional system's internal philosophy? This question, however, does not withstand the idea or the fact that external forces of change are constantly with the process and one must consider nothing is so constant as change.

There are then five fundamental tracks of opportunity available in the PED process and each or any combination of these may form the ideal individually programmed curriculum for the student. The tracks of learning opportunity are: (1) communication skills, (2) social attitudes development, (3) computational skills, (4) natural and physical sciences, and (5) vocational orientation and skill development.

The Communication Track

Commensurate with any learning level is one's ability to communicate in singular or multiple models of understanding and effectiveness. One cannot competitively function without the basics of human communications; that is, basic reading, writing and speaking and on to the more advanced state of the art which includes interpretation, dissemination and creative analysis. Grade level interpretation is irrelevant to communicative skill and really only provides nice little boxes from which one must struggle. On the positive side, personal skill level determination is very relevant to communications and becomes as functional to the learning process as accuracy will allow. The factor of time is eliminated and the student is allowed to pace himself and relate to personal interest areas concerned with fundamental communications regardless of ability level. Motivational effect is gained in the personal interest and self-pacing effect.

The Social Attitudes Track

This area of PED curriculum simply involves all of the fundamental social sciences, plus--and hear this loudly--application of the social science theory to practical personal living. This concept gives the student an opportunity to explore and apply social ideas to his own interrelated problems. For example, is it a relevant thing to know precisely and exactly fundamental dates in historical analysis, or is it more real and of vital importance what an era of history did for humanity and how this era might communicate with present social applications? In other words, what is there to learn from the past other than dates? It is, therefore, very crucial that the social attitudes track helps a person to place himself, in relation to his social relationships, to the internal and external function of the system in which he lives.

The Computational Track

Categorically this area of concern is very fundamental as a forceful tool of expression, and relies heavily upon personal mental development through the manipulation of fundamental basic functions of the lowest mathematical order. Computations learning should be applied in a very practical and applicable manner so that the innumerable levels of math skill, whether involved with the four basic functions or in the most advanced quantum, are commensurate with personal applicable skills of the student. Most fundamental to life now and in the future is a confident human being who is able to understand and cope with the reasonable place of mathematics in his life. One, for example, could take a student from any level of competency, build fundamental math skills matched to desire and ability, then tactfully and socially lead him toward solving some of his communication problems through mathematical expression. As one earns an income and manages personal funds, what deductions are taken from the income, on what percentage basis, why is this done, and consequently what possible benefits are there in the future?

The Natural and Physical Sciences

Conditions existing in our known world today and the vast exploration of the universe lead a most hospitable base of operations to challenge untapped quantities of a student's curiosity. The applicable standards of exactness found in the sciences are without a doubt the necessary means for personal challenge. As PED would function, the sciences become the channel of critical development through knowledge exploration and the refinement of precision in varying degrees. Again and paramount to this track is one's opportunity to redirect a person's outlook, attitude, and creativity. Science is based upon challenge and enables society to work at common problems with common goals. Who can say where the answers to man's earthy problems might be?

Vocational Counseling and Skill Development

Fundamental to a rational and skillful PED program of learning experience is not only the competency of mental application and development, but the assembling of an integrated applicable vocational base with broad diversity which allows individual students a choice of applying knowledgeable skills and further developing same. A program of this type must have a place in reality and help the learner to apply theory through function. Personal observation has shown that high levels of intellectual skill are not fundamentally relevant to the needs of an individual and may, in most instances, retard and inhibit the social skills inheritable to all. However, practical application of vocationally-oriented skills to the intellective person enables him to communicate much more favorable with social problems he faces day to day. Most favorable reaction has been observed where vocational programs in a PED setting broaden the hopes for functional and practical rehabilitation.

As a forthright example, man developed the computer system; therefore, the computer should not be capable of control other than the level of systems which man allows himself to be dominated. Careful fundamental integration of the vocational track is not only wholesome, but is critical to the entire process. Further analysis depicting the vocational aspect of education is necessary and commensurate with fundamental descriptions of human need. Many persons are residents of correctional settings because of such unknowns to them as: "How does a car function?" "Am I being cheated on repair bills?" "When did I get a good deal on my car trade?" "Why and how do I obtain title and ownership?" "Was I rooked on financing my car?" "What repairs can I make for myself?" These questions, when applied to practical theory, show the relationship of the vocational track to any level of intellectuality in a PED-type curriculum.

The curriculum of a PED nature is not a flow-through system, but a flow-in system for the participant. He has every available opportunity within the means of the institution to explore and relate his personal educational position to reality. Therefore, one should be vitally concerned about the core of this system so that the mechanism does not overcome the basic reality of human endeavor. Do not think in terms of what "courses are available," but on the contrary, seek the individual to be helped; find and design a meaningful educational plan for him cooperatively; and constantly emphasize the reality of attitudinal change with new experiences in the five track areas.

The Technique of Management in Personal Educational Development

Perhaps the most inconsistent area of curriculum development in correctional institutions is the internal management of the educational rehabilitation theme. There are essentially three concise steps to the functional management of a PED nature and as these questions are answered each step is exposed.

(1) Where is the program now?

(2) What should the program accomplish?

(3) What action steps need to be taken toward fulfilling total accomplishment?

Answering these fundamental questions at any point in time is irrelevant unless the base line is clearly defined and there is total personal committment to the developmental curriculum process. The entire staff must set forth clearly defined objectives which are well researched and be ready to assume a risk-level commensurate to fulfilling visible and projected action steps. Only the total organization can effect change in the learning process through positive commitment by a team effort. The development of the team concept in curriculum building is most relevant to all that has been said in this document. The PED curriculum cannot exist through inconsistent management or be there just because people

exist; it must be there because the effort toward effective and planned change in the total rehabilitation process is real!

It is recommended that if one is to begin a new program in the correctional setting, or reassess or redesign the present PED type curriculum, a competent management seminar become a part of the happening. This in-service effect has total institutional involvement and commits each staff member to find his position on the "team." No team--no score!

Of "gut" level prominence and paramount to the entire PED process, is having aboard the team, personnel who are totally committed and dedicated to the process of rehabilitation through education. Curriculum development is as effective as the human resource that mans the helm.

Conclusion

Effective, dynamic, rehabilitative PED curricula can exist and function well, both in the "here and now" and the inevitable future, provided the effective domain, or core function, remains with the analysis of human dignity and need. Without a doubt PED is the human equation personalized with boundless resources. The learner in a correctional setting is fundamentally there because he was incapable, in some manner, of communicating with society and its regulations governing his life. Therefore, greatest consideration must be given to a total committment in curriculum development in correctional settings so the individual in the learning process can, if at all possible, return to society and understand how he functions with life and how life functions with him. All that one may hope to do with PED is to redirect the trust level of the relationship of the human being to society and the society to the human being. The work which is ahead of the curriculum renewal process is, without question, the most pronounced educational challenge of out time!

Reference

Ryan, T. A. (Ed.). A model of adult basic education in corrections (Experimental ed.). Honolulu: Education Research and Development Center, University of Hawaii, 1970.

AN ADULT BASIC EDUCATION CURRICULUM

Leonard R. Hill
State Department of Education
Lincoln, Nebraska

In order to properly treat the subject of this paper, it is necessary that a definition for curriculum be given. If one were to ask this question of a number of people, he would no doubt get as many different answers as there were persons asked, for everyone has a different idea on the subject. Too frequently, one would get an answer that curriculum is the course of study being followed, whether it be an elementary, secondary, or adult education program.

In this paper, I would like to take a much broader view of curriculum. This definition will include the planning, the objectives, the implementation, and the evaluation of the course of study. Immediately one can see that the concern is with a host of processes that have to do not only with teaching-learning strategies, but also with the institutional settings that make it operational, and with an evaluation of the outcome.

Nature of the Curriculum

In too many educational institutions and programs, the curriculum is established by the textbooks chosen. This type of curriculum tends to stereotype the students as being all on the same level with the same background experience, moving at the same pace, interested in the same thing. We all know from experience that this is not being realistic. It is mandatory that the curriculum be selected and programmed to fit the student and not that the student be fitted into the curriculum. If the student is to benefit from the curriculum, it must be planned to bring about change in his behavior.

In any adult basic education program, curriculum is the primary avenue through which change in behavior of students can be affected. These changes include several items: increased knowledge and understandings, new attitudes and values, and the acquisition of skill. All of these changes are needed if the undereducated adult in the correctional institution is to function effectively in today's society.

Therefore, the educator in the correctional institution is faced with the task of developing a curriculum that will be conducive to the desired changes in the behavior patterns of the students. To be most effective the curriculum development process must be sound and logical in order to best use existing resources to meet the student's educational needs.

To be certain that the curriculum of the institution meets these educational needs, clearly defined objectives are a necessity. An educational objective is an aim or intent to effect a proposed change in

a learner within a specific content area. The changes may involve increased knowledge, understanding, attitudes and the acquisition of intellectual or action-oriented skills. The objective should describe what the student is to be like when he has successfully completed a learning experience. By this is meant the pattern of behavior, or performance the student should be able to demonstrate within a specific content area. Objectives insure the sound basis needed for selecting content, appropriate materials, and teaching methods. Without clearly defined objectives, it is impossible to accurately determine the direction a course or program is moving, if at all. Also, it is impossible to determine whether or not a student is moving toward his goal. Thus, the first step in a good curriculum is clearly defined objectives.

In the correctional setting, objectives become even more important as the students must change two sets of behaviors in order to become an ordinary member of society. He must acquire skills the lack of which prevent him from reaping the rewards of our society, and he must become independent of the kinds of environmental events which have maintained his antisocial behavior. Thus, an adult basic education curriculum objective must strive, not only toward providing a functional literacy, but also toward assisting in the re-socialization of the offender. Adding the objectives together, the goal of the adult basic education curriculum thus becomes a foundation upon which the student can base future operations as a mentally efficient, economically self-sufficient, and socially productive individual.

For an educational objective to include the above suggestions, it must identify (1) the learner, (2) the behavior change desired, and (3) the content area in which the behavior change is to take place. A useful approach to identification is given by Bloom, Krathwahl and their associates (1964). Their schema classify behavior changes and objectives into three domains: first, the cognitive domain which includes the recognition or recall of knowledge and the development of intellectual abilities and skills; second, the affective domain including the emotion, interests, attitudes and values; third, the psychomotor domain dealing with the mainpulative or dexterity skills.

How would this approach to curriculum differ from traditional approaches employed by adult basic education directors? The major difference is that the emphasis is placed on the learner and the desired changes in his behavior rather than on materials and what the instructor intends to do. A casual evaluation of teaching plans developed by adult basic education instructors reveals that instructors tend to state objectives in terms of what they plan to do (Nebraska State Department, 1971). For example, an adult basic education instructor's teaching plans state that he is going to teach "long division." This concept indicates what the instructor hopes to teach. It does not indicate the specific behavior changes that must take place in the learner in the content area if he is to become skillful in long division. A thorough analysis would need to be made of the learner's prior experience and knowledge of the content area. Is he skillful in addition, subtraction, and multiplication? Subsequent reviews might be in order by examination

as the student may already have the expertise deemed necessary to be skillful in long division.

The real purpose of the curriculum is not to have the instructor perform certain activities, but to bring about significant changes in the student's behavior. Based on this, any statement of curriculum objectives should concern intended changes in the learner.

Implementation of the Curriculum

In the implementation of an objective-based curriculum, regardless of what subject matter is included in the curriculum, it should be so used as to be on a performance basis for each student. It is of utmost importance to facilitate a student's ability and not his time. All too frequently a student's advancement is measured by the amount of time he spends in the classroom rather than by his performance of skills developed. This is the reason why it is necessary that curriculum objectives include the learner and not just the content area.

In today's rapidly advancing world, the term, basic education, must be interpreted to mean a high school education. Sociologically, when considering basic education, the socialization of the individual must be considered as being a part of that basic education, for the major part of the socialization of the individual takes place in the home/school mileu. In the case of corrections, the goal should be to bring about behavioral changes in the offender so that the offender will be capable of interacting with and reacting to society in a manner not likely to be perceived as deviant. Thus, the goal of the correctional institution is the ultimate resocialization of the offender.

With this in mind, when one implements the adult basic education program in a corrections institution, one must strive to use it in the re-socialization of the offender. If adult basic education is to accomplish this goal, it must include the following basic areas:

1. Academic education. This area must provide functional literacy and mental efficiency. This cannot be done along the old pedagogical lines, but must embrace different techniques. Based on objectives, it must start at the level at which the offender is capable of functioning, and move toward optimum skill levels determined by the student's potential.

2. Career education. From the first hour in class, the student should begin the process of building toward a career. This is not synonymous with vocational training, although vocational training constitutes a large portion of it. Career education goals should be to make the student aware of opportunities in careers. Toward this end, vocational education should be as relevant to that choice as possible. This implies that the career education be as current as possible, with a continually updated methodology and equipment, and not be limited to manual trades.

3. Social education. This area should be a study of the basic operation of society, its organizations and institutions. This must be programmed so as not to provide the student with a vocabulary of what might be called acceptable answers and reactions, while at the same time leaving the student unprepared to cope with such social situations as proper interactions, leisure time, and basic social knowledge.

There should be a social interplay among the students as they study in all areas, even if the student is using individualized programmed instructional materials. This does not preclude the individualization of the curriculum.

It should be understood that any adult basic education curriculum must be: (1) sequential, (2) carefully articulated in an attempt to teach students a coherent body of material, (3) designed to introduce students to new concepts, and (4) aimed at the development of particular skills.

In the implementation of an objective-based adult basic education curriculum, the instructor has the advantage of becoming thoroughly familiar with the student as a potential learner. He can be cognizant of the present condition of the learner in relation to the expectations and norms of society. This will reveal the gap that exists between where the learner is and where he ought to be, and this gap becomes the educational needs.

Another advantage of an objective-based curriculum is that it can help alleviate the learner's anxiety. It does this by spelling out what is expected of him and helps him measure his progress, thus meeting his needs. This advancement on the part of the offender requires some degree of relearning as well as new learning.

A specific advantage of an objective-based curriculum is that it can realistically lay out what is expected of the curriculum. An adult basic education curriculum that attempts too much will accomplish too little. The objectives can by analyzed to ascertain their attainability and importance.

The major disadvantage to an objective-based curriculum is the time involved in securing and writing relevant objectives. It is a very time consuming and difficult activity. However, the results produced more than make up for the time and effort spent in writing the objectives, especially when the behavior changes become evident and progress is seen on the part of the learner.

Summary

A final note on curriculum in the correctional institution is that it must be transferrable to the life to which the student will return. The kinds of skills which transfer best fall into the higher cognitive levels as suggested by Bloom (1964). An outline of his taxonomy of edcational objective lists the heirachical areas:

Knowledge - Basically memorization. Information is given back back by student verbatim.
Comprehension - Restating information, summarizing or explaining it.
Application - Applying rules or principles to new situations. (i.e., ones not previously gone over in class)
Analysis - Breaking down a whole into designated elements.
Synthesis - Creating or producing something unique. Self-expression.
Evaluation - Judging in terms of internal logic or consistency or by outside criteria.

The tragedy is that the academic skills taught by typical teachers are found mainly in the knowledge realm. However, by applying the higher taxonomic areas and directly teaching life-approximation skills, a curriculum with high carry-over can be experienced by the students.

In summary, a curriculum containing basic academic career and social correlated components can equip the student of the corrections educational unit with the capability to behave in a way which society rewards. Many specific objectives can be identified and performance measured. However, students must learn more than just answers; they must have behavioral changes. This then is the basis of curriculum and it should prepare students with the capability of living a productive life.

References

Benne, K. D. Human relations in curriculum change: Selected readings with special emphasis on group development. New York: Dryden Press, 1956.

Bloom, B., et al. Taxonomy of educational objectives: Handbook I - cognitive domain. New York: David McKay, 1964.

Glaser, D. The effectiveness of a prison and parole system. New York: Bobbs-Merrill, 1964.

Havighurst, R. J. Developmental tasks. New York: Longmans, Green and Company, 1950.

Krathwohl, D., et al. Taxonomy of educational objectives: Handbook II - affective domain. New York: David McKay, 1964.

Mager, R. F. Preparing instructional objectives. Palo Alto: Fearon, 1962.

Nebraska State Department of Education. Adult basic education evaluation report. Lincoln: State Department of Education, 1970.

Nebraska State Department of Education. Adult basic education evaluation report. Lincoln: State Department of Education, 1971.

Tyler, R. W. Basic principles of curriculum and instruction. Chicago: University of Chicago Press, 1957.

AN ADULT BASIC EDUCATION CURRICULUM

C. J. Johnston
Iowa Department of Public Instruction
Des Moines, Iowa

In dealing with the development of the adult basic education curriculum in correctional settings. it must be recognized that there are many facets of adult basic education, all centering upon the individual to be helped by this education. This paper will dwell especially on the nature of the curriculum for the educationally disadvantaged in correctional institutions, any important or unique features in this specific curriculum, and finally how this curriculum is implemented in the correctional institution. This paper will consider the advantages and disadvantages of specific curricula, the outcomes from such use of the curriculum, the relation to the outcomes of such items as unique characteristics of incarcerated individuals, empathy of the instructors, materials available and their relevancy to students, and the attitudes, philosophy, or policy of the institution's administration. As a generalized introduction to the above, I wish to make some comments based on personal experiences, research, and information gained from individuals serving in educational capacities in correctional institutions, which I presented in a paper in 1971 dealing with the adult basic education learner.

It is necessary, first of all, to understand the philosophy of the administration of the correctional institution toward education. Does the warden, or chief administrator of the institution want adult basic education as a part of institutional rehabilitation? During the last few years there has been a trend toward change in the attitudes of the correctional administrators toward education. There has been a movement from the old custodial, security, and work programs to a program of rehabilitation including adult basic education as a vital part of that program. Most administrators now are recognizing the necessity of a sequential plan, following basic adult education, where needed, with high school completion and career education. Jobs now require more mental capability, fewer physical skills, a higher educational attainment at the entry level, and a greater versatility and adaptability on the part of the worker.

Studies by several state departments of education have shown an increase in the number of drop-outs in our secondary schools. At the same time, wardens and educational officers in correctional institutions inform us that the population of their institutions is changing in numbers and average age. The population has decreased due to work release programs, pre-sentence release, rehabilitation, while at the same time, the average age has lowered, due primarily, according to these officials, to many of these school drop-outs showing up in the institutions. There is little doubt that much of today's social unrest is the result of a steady decrease in the availability of jobs for the unskilled, and a simultaneous increase in the number of young people who are totally unprepared to meet

the demands of skilled employment in our technological age. These all tend to sharpen the line between idleness and employment, dependence and independence, hopelessness and fulfillment. The responsibility or blame must be shared by all of society; the home, school, industry, church, politics, to name a few.

We must always remember that we, as educators in the correctional institution, have a responsibility to cooperate with the administration. Usually the administrator is not an educator and we need to help in the establishment of a philosophy that will put education in its proper perspective as an important part of institutional rehabilitation. To be realistic, I am aware that it is not always possible for us to make a contribution to the development of the philosophy of these institutions. However, through developing and conducting an effective adult educational program in the institution, we may help bring about a change in their philosophy. It is to be hoped that adult basic education is only one small facet in the total educational program of the institution.

The philosophy of adult education is that education can bring about change in individuals, that adults can learn, and there is a public responsibility for the education of adults as well as youth. This is in keeping with the philosophy that every person has individual worth. The individual should be responsible for his own growth, of course, but the teacher has the opportunity and responsibility to help him gain the necessary insights to see what changes could be of benefit in helping him achieve his goals.

Nature of the Curriculum

The nature of the curriculum, regardless of the institution where it is being employed, must meet the needs of the individual, therefore it is necessary to make some assumptions, such as some are unable to read, there is a wide range in abilities, and there is also a great difference in attitudes and motivation toward learning. Implementation of new ideas are critical factors in education today. We must take a long, hard look at the content and goals of basic education in this scientific, technological age. If people in this age are to become fully functioning members of society, we must concentrate on consumer economics, household sciences and civic responsibilities, as well as the 3 R's.

The development and application of the curriculum must be adult, taught in adult language, illustrated in adult situations, and recognized as being important to adult life. Each program of instruction should be based on the educational deficiencies of the adults enrolled. The course of study should provide a planned and logical sequence of those basic skills necessary for the individual to overcome his inabilities and deficiencies. The ability of the individual is the basic guide.

Description of an Exemplary Curriculum for Educationally Disadvantaged

The following curriculum guide, while not meant to be complete, will

allow for individual differences in students as well as in instructors. The content of the curriculum wherever possible should be socially, culturally, and job-oriented. Teacher- and student-devised materials are encouraged so that the program can be truly individualized. Reading of vocational manuals and becoming familiar with vocational vocabulary should be incorporated into all levels of instruction.

There are three levels of adult basic education.

Level I refers to students from non-reader to grade 3.
Level II encompasses those working in grades 4-6.
Level III covers materials in grades 7-8.

Each level has its own skills and overlapping elements. The following is adapted from The Adult Basic Education Guide for Teacher Trainers, published by the National Association for Public School Adult Education in 1966. Due to the fact that reading is the most important tool of learning, the suggested curriculum for this is included in detail. Other communication skills are outlined, and should be used according to each individual's needs.

Reading Skills

I. Level I (non-reader-grade 3)
   A. Comprehension skills
      1. Finding the main idea
      2. Associating meaning with the printed word
      3. Interpreting the main idea
      4. Drawing conclusions
      5. Recalling
   B. Word recognition skills
      1. Using pictures
      2. Using the content of a sentence as an aid in identifying words
      3. Using configuration clues as an aid in idenfying words
         a. Length of word
         b. Letters that are tall
         c. Letters that are short
         d. Letters that extend downward
         e. Difference between capitals and lower case letters
      4. Using phonetic analysis
         a. Listening for words that rhyme
         b. Listening for initial sounds
         c. Listening for final sounds
         d. Recognizing words that sound alike
         e. Recognizing that two-letter consonant digraphs such as: ch, th, sh, represent one sound
      5. Using structural analysis
         a. Recognizing root words

b. Recognizing inflectional forms by the addition of endings to root words such as s, ed, ing

C. Vocabulary building skills
1. Beginning to build a sight vocabulary
2. Recognizing and using words that rhyme
3. Recognizing words that are opposites
4. Associating spoken words with pictures

D. Location skills
1. Locating a story by page number
2. Locating a story by using a table of contents
3. Recognizing the parts of a book
4. Knowing the alphabet
5. Using simple maps or globes and supplementary books to locate information

E. Organizing skills
1. Telling a story in sequence
2. Following a sequence of directions
3. Beginning to classify words into like categories
4. Arranging sentences in logical sequence
5. Summarizing

F. Functional reading skills
1. Learning driving language (sufficient to obtain operator's license)
2. Recognizing signs--roads and street
3. Locating places by map reading and following directions
4. Reading classified ads
5. Filling out application forms
6. Reading food and clothing labels

II. Level II (grades 4-6)

A. Comprehension skills
1. Finding the main idea
2. Reading for information
3. Understanding that a sentence is a unit that states a thought or asks a question
4. Interpreting the main idea
5. Forming conclusions
6. Distinguishing between fact and fantasy
7. Recalling specific facts
8. Following directions
9. Recognizing cause and effect

B. Word recognition skills
1. Using contextual clues such as the whole sentence as a clue in determining the meaning of new and unfamiliar words
2. Using configuration clues in observing the total shape of the word
3. Using phonetic analysis
a. Recognizing initial and final consonants
b. Recognizing other consonant sounds
c. Recognizing and producing long and short

vowels

d. Recognizing silent letters

e. Recognizing digraphs

f. Adopting known speech sounds to new or unfamiliar words as an aid to word recognition

g. Recognizing that a letter has more than one sound

4. Using structural analysis

a. Recognizing root words

b. Recognizing the inflectional form of a word formed by adding s, ed, and ing to a known root word

c. Recognizing known words in new compound words

C. Vocabulary building skills

1. Building sight vocabulary

2. Recognizing and using words that are apparent opposites, yet mean the same

D. Information reading

1. Reading to gain information

2. Reading to answer questions

E. Functional reading

1. Using all skills in introductory stage

2. Comprehending newspaper stories

3. Following written directions

4. Improving reading speed and comprehension

III. Level III (grades 7-8)

A. Comprehension skills

1. Interpreting motives of characters in a story

2. Comparing and contrasting ideas

3. Selecting pertinent facts to remember

4. Rereading to verify or recall

5. Reading to gain implied ideas

B. Word recognition skills

1. Using contextual clues

2. Using configuration clues

3. Using phonetic analysis

a. Adapting known speech sounds to new and unfamiliar words as an aid to word recognition

b. Pronouncing words by sound units: other consonant sounds

c. Recognizing and producing long and short vowel sounds

d. Using other vowel sounds

e. Recognizing silent letters

f. Recognizing digraphs

g. Recognizing that some letters have more than one sound

h. Using a dictionary and glossary as a guide to the pronunciation of words

i. Recognizing that different letters or combinations of letters may represent the same sounds

j. Becoming aware of the pronunciation key in the dictionary and glossary

4. Structural analysis
   a. Root words
   b. Prefixes and suffixes
   c. Syllables
   d. Inflectional forms
   e. Compound words
   f. Contractions
   g. Possessives

C. Vocabulary building skills
   1. Recognizing and using synonyms, antonyms, and homonyms
   2. Accumulating a reading vocabulary of words needed in the adult world
   3. Developing a more technical vocabulary

D. Location skills
   1. Learning to use many sources to locate information
      a. Table of contents
      b. Title Page
      c. Index or appendix
      d. Glossary
      e. Dictionary
      f. Encyclopedia and reference books
      g. Charts, graphs, maps, globes
      h. Footnotes and bibliographies
   2. Learning dictionary skills
      a. Locating the part of the dictionary in which a certain word is listed
      b. Using the alphabet to locate a word in the dictionary
      c. Using guide words
      d. Selecting the appropriate definition
      e. Using the dictionary as a guide to pronunciation by noting the syllables, accent marks, and the long and short diacritical marks

E. Organizational skills
   1. Recalling events of a story in proper order
   2. Selecting the main idea of a paragraph as an aid to organizing
   3. Preparing a simple outline with the teacher
   4. Summarizing a story
   5. Finding the topics of a paragraph as an aid to beginning an outline
   6. Beginning to outline--two or three main headings

F. Informal readings
   1. Reading to solve problems, find information, verify a point, or answer a specific question
   2. Readingmore than one author on the same subject
   3. Reading at different speeds for different purposes

G. Recreational reading
   1. Reading for enjoyment
   2. Getting acquainted with our literary heritage
H. Functional reading
   1. Reading in fields of general interest
   2. Reading to advance occupational or vocational knowledge

Basic Language Skills

Basic language skills--writing, spelling, grammar, speaking--should be closely related to the reading activities. The skills identified in the following pages should be introduced to the students, and in so far as possible, adapted to their abilities and interests.

If the reading materials do not provide appropriate exercises to develop these language skills, the teacher should prepare materials and activities.

I. Speech skills
   A. Enunciation and pronunciation
      1. Say words correctly and clearly, with attention to correct vowel sounds and to beginnings and endings of words.
      2. Practice initial and final, k, d, l, lf, es, lves, and t.
      3. Pronounce correctly all words commonly used.
      4. Learn to use pronunciation aids in dictionary, such as syllabication, accent marks, and diacritical marks
      5. Practice pronouncing every syllable
   B. Proper use of the voice
      1. Speak loudly enough for all to hear.
      2. Make the voice reflect meaning and feeling.
II. Writing skills
   A. Capitalization
   B. Punctuation
   C. Spelling
   D. Paragraphing
   E. Manuscript writing
III. Listening skills
   A. Recall specific information heard
   B. Acquire a feeling for correct word forms and sentence elements
   C. Follow the logic and sequence of a discussion
   D. Add new, interesting words to the vocabulary
   E. Receive directions and messages accurately
   F. Take notes during talk or report
   G. Summarize an oral report
   H. Evaluate radio programs and television presentations
IV. Vocabulary skills. Be able to
   A. Use new words in discussion, reports, explanations
   B. Get meaning of new words from context

C. Develop ability to choose vivid, descriptive, and action words to add to interest of sentences
D. Enrich vocabulary by using new meanings for already familiar words
E. Choose words to express exact meaning
F. Replace overworked words and expressions by more vivid and interesting synonyms
G. Apply knowledge of grammar (parts of speech) to aid in selecting the right word for the desired function, as well as the correct word form

V. Sentence sense
A. Develop the concept of the sentence as a complete thought
B. Understand the need for three kinds of sentences--statement, question, command
C. Distinguish between complete and incomplete sentences
D. Vary sentence beginnings
E. Write original sentences, especially within paragraphs
F. Understand purpose and form of the kinds of sentences
G. Avoid short, choppy sentences by combining them through the use of connection words
H. Use various kinds of sentences to vary expression

VI. Thought organization
A. Learn to adhere to a topic in conversation or discussion
B. Relate the events of a story in sequence
C. Notice that a paragraph is restricted to a single topic
D. Make a simple, main-topic outline
E. Determine the topic of a simple paragraph
F. Prepare a three topic outline
G. Outline and classify data for a specific project
H. Outline facts and ideas learned from a talk
I. Discuss a problem or question in order to reach a conclusion
J. Organize notes and make an outline

VII. Correct usage
A. Learn to use correctly such commonly used words as:

come,came,come	wasn't,weren't
see,saw,seen	have,has
bring,brought,brought	burst,bursting
do,did,done	run,ran,run
is,are,was,were	go,went,gone
isn't,aren't	

B. Learn to use <u>has</u> and <u>have</u> instead of <u>has got</u> and <u>have got</u>
C. Use pronouns <u>I</u> and <u>me</u> in correct order with other pronouns and nouns, such as <u>Mary and I work together.</u> <u>He gave it to my father and me</u>.
D. Learn to use <u>those</u> and <u>them</u> correctly

VIII. Grammar
A. Learn the function of nouns
B. Learn the function of adjectives

C. Learn the function of verbs
D. Distinguish between common and proper nouns
E. Use nouns in singular or plural form; learn to spell common forms of plurals
F. Use and spell singular and plural possessive nouns
G. Understand function of noun, verb, pronoun, adjective, adverb, preposition, conjunction, and interjection
H. Recognize the preposition and prepositional phrase
I. Differentiate between singular, plural, and possessive pronouns, subject and object forms of pronouns.
J. Recognize agreement of predicate with subject (usage)

The basic language skills are not presented here on specific levels or in sequential form because much of this will be used to satisfy individual needs or desires. Formal teaching of grammar has been one of the so-called "hang-ups" of students, and sometimes even the cause of drop-outs. I consider it necessary to help such students see their need for specific information in this area and then assist them in satisfying this need. Detailed information in this area can be found in many sources of published materials now available. Also, it must be remembered that due to different ethnic backgrounds and colloquialisms, it would be unreasonable to expect to change all language patterns of adults, in or out of correctional institutions.

Mathematical Concepts

I. Level I
   A. Writing number symbols--1 to 10
   B. Understanding the rational number system, simple concepts, and language sets
   C. Learning mathematical vocabulary--add, subtract, less, more.
   D. Mastering one hundred addition and subtraction facts
   E. Learning the processes of addition and subtraction
   F. Working mental arithmetic problems involving dollars and cents for shopping purposes
   G. Understanding functional mathematical concepts
      1. Location of places by number
      2. Distance
      3. Speed
      4. Volume
      5. Time
      6. Size
      7. Fractional concepts: ½ hour, 3/4 mile, ½ lb., time-and-a-half for overtime, clothing at half price or one-fourth off
      8. Per cent as it applies to credit buying
      9. Taxes
      10. Insurance
II. Level II
   A. Number symbols
   B. Number systems to 100,000
   C. Addition and subtraction

1. Understanding addition and subtraction facts
2. Adding and subtracting dollars and cents
3. Adding and subtracting tens, hundreds, and thousands
4. Adding and subtracting measures (feet, inches, yards, pints, quarts, gallons, minutes, seconds, hours)
5. Adding and subtracting like fractions
6. Using vocabulary--add, subtract, less, more, addend, sum, difference, total, minuend, subtrahend.
7. Solving word problems, one-step variety

D. Multiplication
1. Using basic facts (tables)
2. Multiplying one-, two-, and three-place numbers by one- and two-place multipliers
3. Multiplying dollars and cents by one- and two-place multipliers
4. Using vocabulary--times, multiplier, multiplicand, product, partial product
5. Solving word problems involving multiplication

E. Division
1. Using basic facts (tables)
2. Dividing one-, two-, and three-place dividends by one-and two-place divisors
3. Dividing dollars and cents by one- and two-place divisors
4. Using vocabulary--divisor, dividend, quotient, remainder, trial divisor
5. Solving word problems involving division, one-step variety

F. Addition and subtraction of like fractions
1. Defining fractions (develop the meaning of fractions, whole number, part, numerator, denominator)
2. Addition and subtraction of fractions without and with reducing answer to lowest terms
3. Addition and subtraction of mixed numbers
4. Solving word problems involving adding and subtracting fractions and mixed numbers

G. Functional mathematical understandings
1. Installment buying
2. Budgeting, including income, fixed charges, etc.
3. Money management
4. Values in purchasing
5. Time as related to earning power, work-day, time-clock

III. Level III

A. Review and expansion of processes learned in elementary stage

B. Decimals
1. How to read and write decimals
2. How to change fractions to decimals

3. Addition
4. Subtraction
5. Multiplication
6. Division

C. Percentage
1. How to read and write per cents
2. How to change per cents to decimals and fractions
3. How to find what per cent one number is of another
4. How to use per cents larger than 100
5. How to use short cuts in finding per cents
6. How to find a number of which a per cent is given

D. Measurement

Other Basic Concepts

I. Consumer Education
A. Money management
B. Consumer buying
1. Preparation for becoming a wise consumer
2. Getting information on where to buy
3. Understanding the protection a consumer has
4. Understanding taxes -- sales, luxury, gasoline
5. Reading tags and labels
6. Judging values
7. Evaluating ads and sales

C. Credit
1. Credit buying in relation to the consumer, the business and the economy
2. Advantages of credit:
a. Opportunity to take advantage of bargains
b. More convenience for consumer
3. Kinds of credit:
a. Open-credit account
30-day account
three-pay plan
revolving credit
open charge account
b. Installment account credit
conditional sales contract
Chattel mortgage contract
c. Personal loan credit
4. Keeping a good credit rating:
a. Making payments on due date or before
b. Choosing purchases carefully and planning each transaction
c. Knowing amount committed to pay
d. Explaining to merchants and lenders the reasons for late payment

II. Citizenship
A. Government - forms
B. Community
C. Duties of citizen
D. Privileges of citizen
E. Important persons in our history

F. Principles and objectives from which our government developed.

III. Family Concerns
- A. Promotion of health and safety
- B. Management of food
- C. Management of clothing
- D. Management of housing
- E. Budgeting
- F. Parent-child relationships

IV. Vocational Orientation
- A. Development of positive work attitudes, techniques, behavior
  1. Responsibilities
  2. Ability to follow directions
  3. Reasons for losing jobs
- B. Understanding one's behavior
  1. Human relations
  2. Thinking before acting
  3. Traits necessary to work with people
- C. Individual choice of occupation
- D. Improving one's self
  1. Health and hygiene
  2. Personal development
  3. Appearance
- E. Techniques of getting a job
  1. Locating job opportunities
  2. Applying for job
     - a. References
     - b. Personal appearance
  3. Things employers look for in prospective employees
  4. Planning for work

Important and Unique Features of the Curriculum

One unique (and important) feature of the curriculum for the adult learner is its flexibility. The student may start his studying at the level of his educational competencies and proceed in accordance with his ability. There can be a sound and logical sequence of educational experiences without necessarily being involved with every detail of the course outline, due to previous and varied experiences of the adult learner. Basic education, as outlined in this curriculum, can be linked in parallel with various career programs in order to make it possible for the inmate to be better prepared for "outside living" when released.

Implementation of the Curriculum

The successful implementation of the adult basic education curriculum in a correction institution is totally dependent upon (1) attitude of the administration toward the program, (2) competency and empathy of the instructors, (3) instructional materials selected for use, (4) methods of instruction, and (5) physical facilities at their disposal.

The administration of the correctional institution in the past has placed emphasis on work programs to the detriment of the educational. After working all day, most inmates would choose recreational activities or inactivity in preference to an educational program. Inmates should have a choice between an educational or a work program during the regular day. True, some might choose the education just to get out of work, but this would be a challenge to the instructor to motivate the inmate to further educational goals.

The selection of the instructor is most important because he must understand the unique characteristics of incarcerated adults, who have all the characteristics of the undereducated adult plus others which resulted in his incarceration. The primary job of the adult educator working in the basic education programs is that of motivation.

Selection of appropriate instructional materials for adult basic education should be determined by asking these questions: To what extent does the textbook, workbook, visual aid, or programmed learning system relate to the student, provide for initial success, provide for natural progression, serve a diversity of learning abilities, respect the adult's maturity and his background of experiences, and motivate acquisition of occupational and social skills? There are many other criteria that can be established in the evaluation of materials. No one set of materials currently published could be considered a total instructional system applicable in adult learning situations. It is doubtful whether such material will ever be printed because of the many different learning problems of the adult basic student. Because of this problem there is a great need for the instructor to be able to innovate and create teacher-made materials.

The methods of instruction must be adapted to the basic needs of the individual because of the diversity of environment and experiences of the students involved. Inmates should be encouraged to work with the staff to develop educational programs which will satisfy their individual needs. Individualized instruction may involve a one-to-one teacher-student relationship, programmed learning using books or machines, films or filmstrips, small group activities, and many other innovative, relevant situations.

The physical location and arrangement of the classroom are very important in contributing to a pleasant educational atmosphere. Whether it is within the institution or outside, there should be ample room with adult size furniture arranged in such a way that there can be inter-communication between all members of the group, but also provide for individualized activities. The room should have adequate lighting and air-conditioned for year-round use. Many of those in the class have had to do with "second rate" equipment and conditions all of their lives, and it is past time for a change.

Outcomes From Using the Curriculum

The adult basic education curriculum in the correction institution

may give the inmate an opportunity to complete educational goals which he had previously been denied, such as learning to read, completing high school, and/or learning a vocational skill. The school attempts to create a situation in which the student can find experiences which motivate him to search for successful academic experiences which have the effect of improving his self-concept. Attitudes and unsocial behavior frequently bear directly on the adult's lack of successful school experiences. Thus, development of the individual through the media of educational instruction also develops or changes an attitude from destructive to constructive and satisfying human relationships. Therefore, learning activities in the classroom are oriented toward the fostering of social and emotional maturity. This will better equip the inmate for productive living upon release from the institution.

Advantages and/or Disadvantages of this Curriculum

The curriculum as outlined above has many distinct advantages for the undereducated adult, especially the adult offender who is in an institution. He is often a dropout from school and now is dropped from the family setting, the labor market, and the mainstream of American society. He is likely to feel antagonistic toward society, but also feels alienated and depressed, full of despair, and inclined to distrust everyone with whom he associates, including the adult teacher. This program as presented, under a competent instructor, gives this misunderstood, hopeless individual a second chance to gain successful educational experiences previously denied by society. This curriculum allows for individual differences, new and varied methodology and techniques, as well as use of innovative materials. Programmed instruction has some specific features which are valuable in this setting such as (1) immediate knowledge of results satisfying the need for gratification and a sense of accomplishment, (2) lack of competition and absence of embarrassing disclosure of ignorance and (3) a self-pacing feature for the unmotivated individual. Each student may enter the program at his own educational level and progress according to his ability. Consumer education, citizenship, family concerns, and vocational orientation are designed to help the individual adult make a better adjustment when he leaves the institution, and be more capable of contributing to the welfare of his family and society.

Any disadvantage would be in the implementation of the program, such as lack of competent, understanding adult educators or poor recruitment of students due to lack of motivation. Also, failure to make use of innovative techniques or creative teacher-made materials would minimize the effectiveness of the curriculum. Therefore, it is obvious that the success or failure of this curriculum depends upon the competency of the instructor.

Summary and Conclusion

To summarize, the philosophy of the administration of the correctional institution toward education is very important, and in recent

years there has been a trend toward change, with more emphasis on rehabilitation, including adult basic education as a vital part of that program. The nature of the curriculum must meet the needs of the individual, be flexible, and adult-oriented. An exemplary curriculum must allow for individual differences in students as well as in instructors, and the content of the curriculum, wherever possible, should be socially, culturally, and job-oriented. Flexibility in the curriculum is important, making it possible for basic education to be linked in parallel with various career programs. The successful implementation of the adult basic education curriculum is dependent upon the attitude of the institution's administrators toward the program, the competency of the instructors, materials used, methods of instruction, and the physical facilities available. Important outcomes are improvement of educational competencies, development of vocational skills, and changes of attitudes leading to a better self-concept. The advantages of an individualized, flexible curriculum are numerous, with the outcome being a more capable, well adjusted individual capable of contributing to the welfare of his family and society.

The objective should always be to fit a program to the individual student and help him gain a competency in the communication and computation skills, while also developing acceptable attitudes toward society and a valid sense of values.

In conclusion, I would like to leave these few ideas with you concerning adult education. The job of adult education is to help people find order and security in a world of rapid change, to build their goals realistically, understand their problems, discover the resources which are available to them, find ways to solve their problems and reach their goals under current circumstances. Almost all adults need help in some way at some time. They need contemporary education.

AN ADULT BASIC EDUCATION CURRICULUM

Mark H. Rossman
University of Massachusetts
Amherst, Massachusetts

The 1970 United States census reveals that there are more than 25,000,000 Americans, 16 years of age or older, who have completed less than 8 years of formal education. Of this number, more than 12,000,000 have completed less than 5 years of formal schooling. Restricted by economic deprivation and undereducation, these individuals are unable to lead full, productive or meaningful lives.

Functionally illiterate inmates in correctional institutions are perhaps the clearest examples of the utter despair described by Robert Frost in his poem entitled, "Death of a Hired Hand," when he wrote:

> Nothing to look backward to with pride,
> Nothing to look forward to with hope . . .

The goal of any adult basic education curriculum should be to build, through educational means, a new hope for the future for the educationally disadvantaged. In our society it is expected that a person should be able to read and write reasonably well. However, when one doesn't possess this ability, he frequently experiences a sense of personal failure, rejection, inadequacy, frustration and a lack of self-regard. A poor self-concept stifles individual creativity and is most destructive to the development of the whole person.

The adult basic education curriculum should do more than simply provide the means for teaching basic literacy and computation. It should provide a way to foster the development of the human potential latent within us all. Further it should be designed to give dignity to the individual thereby allowing a more positive self-image to emerge.

The adult basic education curriculum should be designed to provide hope for the functionally illiterate; hope for a better tomorrow. Translated into "today," hope is usually associated with the hope of employment or better employment. The adult basic education program should be oriented toward the world of work. As important as it is to possess the skills necessary to obtain or keep a job, it is even more important that the curriculum be designed to enable the individual to adapt his training to new positions or responsibilities. In an era of increasing industrial complexities demanding more and more specialization, the acquisition of basic educational skills is the first, but highly significant step, in preparing the functionally illiterate to assume his rightful place in the world of today and tomorrow.

Implicit within any adult basic education curriculum is the assumption that adults can learn. As elementary as this may see, there are

many who still believe the frequently misinformed educators who insist that "you can't teach an old dog new tricks." Incidently, research has shown that old dogs are indeed capable of learning new tricks. Research further supports the notion that adults can also learn.

Adults learn in many and varied ways. As such, it is impossible to describe "The Learning Theory" for adult education. Adult learning theory might be summed up in three words - need, effort, and satisfaction. An adult will learn once a need has been identified, effort expended to satisfy that need and the need finally being satisfied.

Adult learners should not be considered as "tall, grown-up children." In an article entitled "Principles of Adult Learning," William F. Braziel describes adults as motivated learners with backgrounds and experiences different from children. These differences facilitate the learning process. Therefore adult must be treated as adults, treated with dignity, and mus be in programs designed to bolster their egos (Braziel, 1969).

Adults are independent, pragmatic learners often pacing their learning based on the exigencies of the day. Robert Havighurst refers to learning taking place at "teachable moments." He feels that learning takes place when certain points of maturation, interest and need have been reached (Havighurst, 1961). John Holt (1964) and Charles Silberman (1970) also speak of "incidental learning" as being invaluable to the adult educator.

Dale G. Anderson (1969), in his article entitled "Learning and the Modification of Attitudes in Pre-retirement Education" comments that adults generally learn what they want and do best when they take an active part in the teaching-learning process. Paul Bergevin (1967), in his work A Philosophy for Adult Education, likewise feels that the adult must be involved in the process of diagnosing and evaluation the process of his education.

In his book Informal Adult Education, Malcolm Knowles (1959) describes some motivating forces in the psychology of the adult. He lists six needs that must be recognized in order to facilitate learning. They are:

1. Physical
2. Growth
3. Security
4. New experiences
5. Affection
6. Recognition

These six needs plus experience and ability equal behavior (learning).

Knowles further feels that adults can learn throughout their lifetime; that the capacity to learn does not decline, but what does decline is the rate of learning.

CONTINUED

5 OF 7

The early work of E. L. Thorndike (1928) substantiates the idea that the age of an individual is not a significant factor with regard to learning. He said:

> In general, nobody under 45 should restrain himself from trying to learn something because of a belief or fear that he is too old to be able to learn it. Nor should he use that fear as an excuse for not learning anything which he ought to learn. If he fails in learning it, inability due directly to age will rarely, if ever, be the reason.

Irving Lorge (1963), in a paper presented in 1959 at the University of Wisconsin to the meeting of the Commission of Professors of Adult Education stated strongly that intelligence does not decline until the adult reaches his sixties. It was his contention that age does little to affect an individuals power to learn or think. However, he said, "failure to keep on learning may affect performance."

Thus far it has been shown that 1) adult learning rates vary depending on interest, past experience or other contingencies, 2) adults learn better when they are actively involved in the learning process, 3) age is not a significant factor with regard to learning, and 4) intelligence does not decline until one reaches his sixties and even then there is some doubt whether this is due to age or inactivity.

The adult basic education curriculum must provide for the active involvement of the adult in every phase of the teaching-learning process. Paul Bergeven, Dwight Morris, and Robert M. Smith (1963), co-authors of Adult Education Procedures, A Handbook of Tested Patterns for Effective Participation, have outlined and discussed in great deal their six step approach for planning adult learning activities. The steps are as follows:

1. Identify a common interest or need for those who will partipate.
2. Develop topics.
3. Set goals for the learning activity.
4. Select appropriate resources; people, educational materials and aids from which the learners can seek information.
5. Select appropriate educational techniques and subtechniques. A techniques is a way of arranging the relationship of learners and resources to assist the learners to acquire knowledge in a learning situation. A subtechnique is an educational instrument employed to enhance the effective use of the technique.
6. Outline each session and the various responsibilities to be carried out.

In the Handbook of Adult Education in the United States, edited by Malcolm Knowles, Jack R. Gibb, Director of Research for the National Training Laboratories describes six principles which must be true if learning in an adult setting is to be optimally effective. These principles are:

1. Learning must be problem-centered.
2. Learning must be experience-centered.
3. Experience must be meaningful to the learner.
4. The learner must be free to look at the experience.
5. The goals must be set and the search organized by the learner.
6. The learner must have feedback about the progress he is making toward the goals (Knowles, 1960).

For additional material concerning learning patterns of adult the reader is referred to the work of J. R. Kidd entitled How Adults Learn.

The field of adult basic education is currently in a transitional and developmental period. It is a time when the curriculum needs to be examined and evaluated. It is a time in which traditional orthodoxies regarding regular and adult education should be broken. For example, why should it be that only children attend school from 8:00 - 3:00 with adults attending during the late afternoon and early evening? Why shouldn't adults attend certain learning activities with youth of all ages rather than only with other adults?

Traditionally education has been established in much too simplistic a way. It has established dichotomies rather than attempted to discover diverse ways of structuring educational programs. This trend is already apparent in the field of adult basic education.

The idea that education ends must be eliminated in any successful adult basic education curriculum. Potentially, one of the most important factors to be built into any curriculum is an orientation to life-long learning in the general community. While this may be difficult to quantify or identify, it should, none the less, be a basic objective of the adult basic education curriculum.

We are living in an age where the only predictable thing is change itself. It is likely that the very programs being designed by the "regular" educational planners may be outmoded before they are completed in terms of the individual's needs. As educators, we need to find some method to bridge that educational gap. One part of that bridge might be adult basic education; providing we eliminate the idea held by some that adult basic education is only remedial and in some way "second-classish." Adult basic education curricula need to stress the fact that it is part of the continuing expectation of man. One means of eliminating the current stigma attached to the field is to stress basic education in the truly human sense.

Many adult basic education curricula are based upon too many sets; too many sets or standard expectations regarding how people learn or, more importantly, how they don't learn. As a result, many adult basic education programs are much too narrow and frequently do not capitalize on life experience or work experience.

The diversity of human experiences must be built into the educational program. If this orientation were developed we would probably find

that some marginal students would become very good teachers as we would find that these students would have valuable life experiences to share with other students. It is virtually impossible to live in the third part of the 20th century and not collect life experiences that are valuable to others. For example, how much could be learned concerning loneliness, hopelessness or frustration from the inmates in a correctional institution? How frequently is the inmate ever given the opportunity to teach us? Adult basic education curricula and, indeed, all curricula, need to create a legitimate learning climate where this diversity is reflected.

This should not be construed as advocating the elimination of expertise. If such a learning climate were developed, the expertise needed might not be in the selection of the curriculum but in the ability to construct a critical mass of resources able to work upon themselves. Experts might be needed to create an attitude within the community to make this possible or to gain the funds or to recognize the areas of need. While there is a definite need for experts, adult basic education curriculum planners should define the area, level and type of service to be performed in dramatically different ways than has been the custom to date.

The adult basic education curriculum should have many more diverse alternatives in terms of time, location, student body, and juxtapositions of resources for the construction of adult basic education program. One such alternative is Britain's Open University. In an Associated Press release appearing in the January 9, 1972 edition of the Boston Globe, "staggering" successes were detailed. The Open University attributed its success in but its second year of operation, to the alternatives afforded with the use of television, radio and correspondence. Thousands of Britons who have dropped out of conventional schools and universities and have had little chance of ever obtaining a university degree are now able to do so.

The alternative structure offered by the Open University presents many diverse opportunities for research, an area of endeavor badly needed in adult education. While perhaps an alternative structure for gathering information is not fully being utilized, the important thing is that an alternative has been created.

To implement the types of curriculum innovations described would take a level of involvement, interest and risk that we, as a body, have shown little inclination toward in the near past. If adult educators fully believed that they had the right to fail as well as to achieve, then perhaps needed research would commence and alternative programs developed.

Most curricula for adult basic education programs primarily and rightfully are concerned with the acquisition of basic skills in the areas of literacy and computation. In an age where communication occurs on many levels, just how important is basic literacy? Does it justify its position as the primary objective of most curricula?

Historically, it has been demonstrated that more than 95% of the target population either have or have access to television sets. Most basic literacy programs do not take this into account and spend little, if any, time on developing the basic critical and analytical skills of audio-visual communication. Most adult basic education programs, and particularly those in correctional institutions, inculcate effective citizenship as a basic, fundamental goal. Yet how few programs teach critical and analytical skills of audio-visual communication; basic skills necessary if the target population with which we are dealing are ever to successfully achieve in today's society and become effective citizens.

How important are computational skills in our mechanized world? How many of us check the cash register tape when grocery shopping? It is not very difficult to foresee a time in the not too distant future when individuals will be able to exist never having to perform any computations. With the advent of the pocket calculator, all that would be necessary to compute anything is the manipulation of the keys of the calculator.

Adult educators should make certain that adult basic education curricula are not perpetuating the present and not training for the future in the sense that some vocational programs are training for obsolescene. The adult basic education curriculum should take cognizance of the needs, present and future, of the population served and realistically design programs based upon those needs.

Leisure time activities should be a major concern of the clientele served by adult basic education programs. In particular, leisure time is of major concern to correctional institutuions. One can imagine that constructive use of leisure time may have partly prevented the recent tragedy of Attica. On a more global scale, the constructive use of leisure time may ultimately be the answer to whether or not our society will be able to sustain itself and remain intact.

Today, vocational service is no longer psychologically pre-emptive as it was even fifty years ago. Vocational time is less than one half of the individuals waking time. In a model adult basic education program, the time that most uniquely belongs to the individual must be considered, as this is the area in which he has a choice that is not determined by vocational training or societal pressure.

Finally, the adult basic education curriculum should encourage interaction between the generations. The non-communication between the age groups is perhaps one of the greatest problems we face today. To educate an older generation to appreciate the transcience of values of the young is extremely valid in the age of the "communication-gap."

In developing an effective adult basic education curriculum, an appropriate procedure is the use of groups. The early works by Lewin, Lippett and White describing the superiority of group problem solving over that of the individual are no longer being questioned. However, there are many factors that need to be considered when dealing with groups.

For example, the complexity of the problem to be solved, the strength of the group members, and the experience of the leaders are variables which must be taken into account in any discussion of the effectiveness of groups.

In developing curricula for adults with limited literacy, it is important to develop a group awareness but it is even more important to create situations wherein individual anxieties are reduced if not eliminated. When individual anxieties are reduced, adults will learn and can also contribute to the growth of one another. Frequently adults set their aspiration levels at an unrealistic level. When dealing with adults in a group or individually, it is most important that the level of aspiration be realistic.

The use of groups has more profound implications when considered in a societal context. Carl Rogers (1969) states:

> The group experience also is an avenue to fulfillment. When material needs are largely satisfied, individuals turn to the psychological world, groping for authenticity and fulfillment. . . And the group is an instrument for handling tensions, which is important in a culture torn by racial explosions, student violence and all types of conflict, because it offers gut-level communication. It has been tried all to infrequently in such tension situations, but when it has been used it has shown real promise in reducing conflict.

In an unpublished dissertation entitled Responsitivity: The Evolution of Creative Synthesis, Richard Andre (1971) has developed a truly unique and innovative process which, if adopted by adult basic education curriculum planners, would have deep and significant effects upon the group or the individual. Responsitivity is defined as the process of enabling "a person (or a group of people) (to) simultaneously (be) responsive, sensitive, and creative."

Admittedly, many of the ideas presented in this paper do not deal with the adult basic education curriculum as it exists today. Hopefully, as we move forward, the ideas, proposals and suggestions incorporated within the body of this paper will become the focus of the adult basic education curriculum.

References

Anderson, D. G. Learning and the modification of attitudes in pre-retirement education. Adult Leadership, 1969, 17, 381-382; 396.

Andre, R. E. Responsitivity: The evolution of creative synthesis. Unpublished doctoral dissertation, University of Massachusetts, 1971.

Bergeven, P. A philosophy for adult education. New York: The Seabury Press, 1967.

Bergeven, P., Morris, D., & Smith, R. Adult education procedures. New York: The Seabury Press, 1963.

Braziel, W. F. Perspectives in reading. In J. A. Mangana (Ed.), Strategies for adult basic education. Newark: International Reading Association, 1969.

Havighurst, R. Human development and education. New York: Longmans, Green & Company, 1961.

Holt, J. How children fail. New York: Pitman, 1964.

Knowles, M. S. (Ed.). Handbook of adult education in the United States. Chicago: Adult Education Association of the United States, 1960.

Knowles, M. S. Informal adult education. New York: Association Press, 1959.

Lorge, I. Psychology of adults. In Adult Education Theory and Methods. Washington: Adult Education Association of the United States, 1963.

Rogers, C. The group comes of age. Psychology Today, December 1969.

Silberman, C. E. Crisis in the classroom. New York: Random House, 1970.

Thorndike, E. Adult learning. New York: The Macmillan Company, 1928.

USE OF RESEARCH TO IMPROVE INSTRUCTION

Paul W. Keve
Research Analysis Corporation
McLean, Virginia

Anyone who has been in corrections for many years has been accustomed to the distorted character of the usual prison--with the mood of convicts who seem honest only when they are speaking bitterly and cynically, and who appear somehow to be "conning" someone whenever they speak with appreciation of anything. So it comes as an especially refreshing contrast if inmates were encountered who seem honestly optimistic in outlook, and if a whole group of inmates seems to be truly enjoying good morale, it suggests the presence of a program of extraordinary impact.

A few years ago one of the few places where a genuinely enthusiastic group of inmates could be found was in one unit of the California Medical Facility, a prison for young adult offenders in Vacaville. It was a group that was caught up in a special program that was making serious use of these young men as sociological research aides. They were in a daily regimen that included classroom instruction in current sociological problems interspersed with research practice. The program called for these inmates, upon being paroled, to go to work on an outside research project which at that time was the evaluation of some of the early Head Start programs. While still inside, the men were learning about research techniques and were corresponding daily with colleagues, already paroled, who were in the community gathering data which then was to be processed by the inmate group.

These men were given a bit more freedom from prison routines. They were allowed to go to meals singly instead of in line; they were allowed to stay up and study each night as late as they wished. The freedom to be creative and the opportunity to be of service gave them an impressive mood of enthusiasm and excitement. There were no gripes about prison conditions, only discussion of what they were learning and what new opportunity they would be going to upon release. Around the whole situation too, was a heightened sense of status which was surely another potent morale factor.

Such experiences lead to the observation that in addition to the conventional use of research for testing the effectiveness of methods, it can also be used for its direct therapeutic or instructional value to the student himself when he is put in the role of researcher.

Research as a Means of Instruction and Therapy

Some of the better examples of this come from the juvenile field, but the principle involved is adaptable to adults. One of the best examples is a camp for delinquent boys known as Camp Woodland Springs near Dallas, Texas. It is a camp for boys who are school failures and who badly need

accelerated educational progress. Yet there is no recognizable school at the camp. The former director (Loughmiller, 1965) comments,

> It is amazing how many persons think of education as something that goes on in the classroom and nowhere else. They do not stop to realize that some of the finest education in the world formerly took place outside the classroom, the classroom method coming about as a result of the need to educate greater numbers rather than from any inherent superiority of its own (p. 33).

What happens at the camp is that boys plan and develop all conditions of their own living. They live in shelters they have built with materials they have found and prepared, and from plans which they themselves designed. They plan their own meals with concern for both a balanced diet and a balanced budget. They cook and bake in outdoor kitchen facilities that they themselves must design and build. They use latrines that they have planned, built, and located with due regard for ecological concerns. They take educational trips of many days and hundreds of miles, but only after they have engaged in planning for every aspect of the logistics with resultant use of arithmetic, English, geography, and all of those subjects which they had been so estranged from in the classroom.

In other words, a boy who could not make it all in a regular school is sent to this unique camp and here he is engaged in a continuing research activity which becomes at once his education and his therapy. There is a library well stocked with reference works and he turns to these with zeal and interest almost daily as he is driven by curiosity to learn all about the snake he just found, or when driven by the necessities of travel or living arrangements, he must learn about tools, forest materials, or the logistics of making an exciting trip.

Transplanting this educational principle into a prison presents difficulties, of course, but it is not impossible as the experience at Vacaville clearly shows. The areas of potential inquiry that inmate researchers can pursue are legion, limited mainly by the limited time of the staff to furnish provocative ideas and basic reference material.

The important principle operating here is that our clients are commonly people who have had bleak, non-productive lives, and if any program can get to them it will be something that is honest, relevant, and productive in terms that are meaningful to the inmate. It will be a job that the defeated, failure-experienced inmate finds in the first place that he <u>can</u> do, and in which he is accorded some modicum of responsibility and some latitude for exercise of judgment. And finally, it must lead to a product that is potentially useful. This is a description that easily fits research projects, and if you are going to do some research anyway, it presents an opportunuity to use inmate help in a way that can be therapy of the most honest and natural kind.

The issue of research for the sake of improving instruction deserves to be dealt with by a competent researcher, but there may also be some use-

fulness of a sort in having it discussed here from the viewpoint of a correctional administrator.

Research for Improvement of Methods

Some of the special conditions of the prison setting obviously make evaluative research particularly difficult. Professor Albert Morris (1971) of Boston University comments that evaluative research is primarily concerned with,

> ...the effectiveness with which specific ongoing programs and procedures achieve their stated or intended objectives while non-evaluative research is concerned primarily with understanding the relationships of various abstracted factors such as age, socio-economic status, ethnic group, etc., upon some so-called dependent variable such as "the likelihood of being arrested (p. 2)."

Non-evaluative research in the prison setting is useful as a non-threatening accumulation and analysis of objective data. It is useful and necessary in developing knowledge of what kinds of potential students are present and what kinds or areas of knowledge they most seriously lack or need.

Evaluative research will be more difficult to accomplish because of the greater sophistication of the process and the potentially threatening results. So far, research that evaluates effectiveness of institutional programs has tended to show that we are accomplishing little or nothing with some program efforts that were fondly seen as highly promising. When the researcher comes up with such results he is certain to encounter the uneasy administrative reaction that something must be wrong with the research--not with the program.

The reaction is very human and very understandable. The warden may have worked hard to get a grant or appropriation to establish a new instructional program. If now it is not justified by its evaluated results, he feels to some degree repudiated himself; he has a program that is keeping a certain number of staff employed. If this program is to be given up what will take its place?

Or the research may show that a program <u>does</u> work or <u>does</u> have promise, and that too can be unsettling. The broader application of a program that has appeared valid as evaluated in a laboratory experiment will cost money and necessitate various administrative readjustments that a prison is ill-prepared to accomplish. The usual result in this case is simply non-implementation of the research findings and consequent discouragement of the researcher.

The fault is often difficult to assign, but at times it may rest with the researcher himself, or at least the researcher could sometimes contribute more to the success of his work by aiming at areas of inquiry

that will permit realistic and practical results in the rigid environment that surrounds him. The prison world must be very tantalizing to a researcher because it offers some elements that contribute nicely to research, and others that frustrate it. It offers conditions that can be controlled, and a setting in which people are available during all hours and for protracted periods of time. It is frustrating, however, because it offers such resistance to change and is usually sadly non-responsive to research results.

The Need for Unconventional Thinking

An important but difficult thing that a researcher must learn to do is to stir himself out of his acceptance of certain conventional viewpoints and to approach his whole area of activity with great freshness. The field of corrections operates on many fondly regarded but untested assumptions, so we have great need for the iconoclast who takes nothing for granted and indulges in no reverence for the deeply entrenched beliefs that guide most correctional operations. For instance, there is a well-accepted assumption that prisoners as a group are badly lacking in motivation and this is why so few of them succeed in educational programs or even ask to enter them.

Educational researchers, however, are beginning to recognize that it is not quite this simple. It could just be that the professionals who try to help the criminal client are the ones who are out of step. We still have strongly with us the heritage of the solidly middle-class custodians, teachers, therapists, etc., who have dominated the whole approach to the criminal, seeking to understand him in reference to the predominate middle-class culture, and trying to win him to its values. When we stop to think about it with true regard for the inmate's viewpoint, it begins to appear that his lack of enthusiasm for the conventional academic offerings may actually have a positive import as a matter of maintaining the integrity of his own cultural background. The education that seems so plausible and so "right" to the middle class staff person may simply not be relevant as perceived by the inmate. A committee under the sponsorship of the American Friends Service Committee has produced a new book (Struggle for Justice, 1971) on prisons in which they make this caustic comment.

> There is a belief held by many, especially experts in the social service fields, that lower-class, emotionally disturbed "deviant" or "criminal" persons most often are not aware of their real problems and will not seek services that can help them. We disagree totally with this proposition. In the first place, help must be defined from the viewpoint of the person in need, and in the second place, the reason a person in need turns his back on help is, by and large, that the services offered are shabby substitutes for help. When real services are available, those in need literally line up at the door (p. 98).

Whether or not we agree with this, it offers us a suggestion regarding our possible areas of research. In any prison a certain few inmates do apply for schooling. Either these are "conning" someone, or else they

are the ones who by their own backgrounds have some rapport with the middle-class values regarding education. It is easy to guess that when research is done on the effectiveness of prison education, it is done with reference to voluntary student subjects such as those who are in our classrooms, and who by that very fact are not representative of the bigger and perhaps more needly client group. To the extent that this is true, it leads to deceptive findings about education as a service to prison inmates.

A few years ago, Riessman (1962), as an educational psychologist, and now Coles (1972), as a social psychiatrist, have been emphatic in showing us that people we have regarded as culturally deficient are actually possessed of a vital culture, though it is unappreciated by the larger social group. Because of this lack of appreciation, we make few concessions to the cultural standards of this out-group and too easily dismiss its lack of interest in our fine academic programs as just poor motivation. But if the American Friends Committee, previously mentioned, is even partially right, here is an area of much needed research. With use of research tools more thorough and sophisticated than just a questionnaire, we need to find out what instructional offerings might capture the interest of prison inmates who are otherwise ignoring the classroom. Undoubtedly there is little hope of reaching the "old time con" who has settled so resignedly into his long-time anti-social pattern that no artistry available to us today is going to jar him out of it. But we must believe that many of the younger inmates who are scornful of helping programs in general still could be captured if we can contrive the special kind of offering that speaks to their need.

The Limitations of Local Research

One of the arguments for maintaining your own continuing research effort is that the value of any specific sociological research project is to some degree only local. In other words, it is common to find that you cannot seek out the research findings of other projects in other prison settings and apply them reliably as guides to your own setting. This is not to suggest that the work of other researchers is to be ignored. Their findings will have broad applicability and they will be helpful in stimulating your own ideas for areas of inquiry, but they will not be reliable for specific or literal application elsewhere. Each operation has its own environmental characteristics and, especially important, its own set of personalities that affect outcome. Technique has a highly personal quality in effect, and what one teacher can accomplish with some particular technique, another teacher will find unwieldy and ineffective.

So the effect is that any research you do is probably dealing with the particular people and the particular set of environmental conditions at that particular time, and consequently has reliability only in respect to your very local situation. So no matter how much you peruse the literature to learn of research results of others, you need also to have research of your own going if you are to know with certainty of your own effectiveness.

The Need to Differentiate

One thing we have been learning in recent years is that broadly focused research can sometimes mask rather than reveal some of the data we need to know. For instance, it seems interesting to us to know the recidivism rate of a large sample of men who have been discharged from a certain prison, or the rate for all men who went out from a certain academic program or vocational training course. If all we do is to look at the recidivism rate for the whole group, we probably will find that the results are discouraging. Probably the figures will tell us that these men did no better than the general prison population that did not have the benefit of our expensive instruction.

However, a much more detailed analysis would show us that certain men actually did worse than the control group, while others did substantially better. Furthermore, this detailed study should reveal some of the differentiating characteristics of the two extremes, and of those scattered in the range between. Then we realize that by looking at an unrefined recidivism rate we learn nothing because we get only a leveled-off picture that hides the significant peaks and valleys. But there can be splendid usefulness in an exquisitely differentiated study which reveals which case characteristics lead to what kind of success for what kind of person with what kind of instructional approach. This, of course, leads to a need for detailed case data.

The Need for Data

The common finding is that the basic data for building this kind of research is not being accumulated. It is quite in accord with normal human nature to find that the systematic accumulation of detailed data is not going on unless there is an extant project which demands it. In fact, there is a natural bias against the accumulation of data when the records thus developed are not used, but, as we say, just gather dust on the shelves. It truly is difficult to maintain the administrative effort and determination to persist in the diligent gathering and storing of case data when there is no processing and analyzing of it. But if any researcher does come upon such a mine of information, he will be most grateful for the magnificent start it will give him in doing a research job for you.

Perhaps the point in this for you is that you could think of what kind of study you need in order to analyze differentially the effects of your instruction upon a range of student types. Undiscouraged by the fact that no research staff is at hand this year, you could still institute the process of data gathering with hopes that the day will come when there will be staff to deal with your wealth of organized detail.

In view of earlier comments about research as a tool of therapy, ask yourself and your warden if it would be feasible to select an inmate or two to do the job of data collection. If you can get past the traditional concern about confidentiality, you are certain to find that inmates can indeed do the job for you, and if you have selected skillfully, you may find that the inmates will get interested in the possibilities and begin

to study research methods so that they can go on to the satisfaction of the more meaningful work of analyzing the data they collect.

This easily brings up mental pictures of situations that get out of control, are full of abuses, etc. That is up to you. Again referring to the experience at Vacaville, it can be a genuinely professional enterprise with splendid teaching value for the inmates involved if you have the skill to make it so. If you do not stick with it skillfully, then, of course, there are ever so many examples in prison experience to show how subverted the effort can become.

One problem with data gathering that any prison staff member will face will be the follow-up on releasees. You can gather data, perhaps extensively, on those inmate students you currently have, but once they leave they rapidly disappear from your view. To make your evaluative research at all useful, or even possible, you need to follow up at least for a few months. This is difficult, but should not be considered impossible. There may be as many ways of meeting this problem as there are institutions but something like the following might be workable.

First find a bit of money. And do not let this suggestion discourage you too much. No big amount is needed and there are sources for this if you look about you. Get a sizable stock of double postcards with postage. Get your inmate statisticians to do the follow-up study and give them the challenge and satisfaction of helping to design the effort. (Again the fears of abuse will arise, but again this is dependent upon your skill.) As each inmate student is released, establish a follow-up contact, normally the parole officer, and set in motion the process of having a postcard go to him regularly every month, asking for the simplest of data--is the parolee working, is he working at a job related to training you gave him, what new offenses have occurred if any? The parole officer can quickly note this on the tear-off return postcard which is already addressed and stamped.

In certain cases your postcard information will tip you to the presence of more extensive data that you need to get by letter. But even with the most minimal effort you will be getting more information than most prison school principals are gleaning, and it will help you to know about your effectiveness.

When you design the data gathering process, try to be richly inclusive of a wide range of facts whether or not they seem to have anything to do with education and its effects. For instance, you should want to know how much money your departing student has in his pocket, and what financial resources--also what debts--are waiting for him in the community. There is an economic basis to much crime and some inmates go out with two strikes against them just because their resources for getting reestablished are so inadequate. Your instructional program should not be charged with failure if it is found that a big percentage of those who come back were the ones who did not have enough capital to make it through the early period of adjustment.

There may be many other seemingly extraneous factors that help to differentiate the reasons for success or failure in ways exceedingly important

to your efforts. Probably one of the conclusions you will reach is that we are not sufficiently protecting our investment in prison education or training programs until we provide far more intensive follow-through help to the newly paroled person. There is good reason to suppose that when research repudiates the effectiveness of prison programs, the actual message is that it will never be enough to help a man through just one stage of the criminal justice process. The helping process must be persistent through all phases if the good work of any one phase is to survive. If your research does modify or support this view, it will help bring a more balanced improvement to the whole process.

References

Coles, R. Migrants, sharecroppers, mountaineers. In Children of crisis (Vol. II). Boston: Little, Brown, 1972.

Coles, R. The south goes north. In Children of crisis (Vol. III). Boston: Little, Brown, 1972.

Loughmiller, C. Wilderness road. Austin: The Hogg Foundation, University of Texas, 1965.

Morris, A. Article in Correctional Research, November 1971, p. 2.

Riessman, R. The culturally deprived child. New York: Harper & Row, 1962.

Struggle for justice. (Prepared for the American Friends Service Committee.) New York: Hill and Wang, 1971.

MEDIA IN ADULT BASIC EDUCATION

Ronald H. Sherron
Virginia Commonwealth University
Richmond, Virginia

Introduction

The Problem

National Concern. Nationwide there are over 3 million illiterate adults who have had no formal school experience. There are 11 million adults who have completed 5 grades or less, 24 million with less than an 8th grade education, and 56 million with less than a high school education. To compound this problem there are untotaled numbers of adults who are functionally illiterate and cannot read at a 5th grade level no matter how many years of school they have completed. The Office of Education has made this a high priority demonstrated with the emphasis that is currently being placed on the "right to read."

In addition, Senator Jacob K. Javits (R-N. Y.) introduced amendments to the Adult Education Act that passed both houses and became law. These amendments, which were supported by the National Association for Public School Adult Education, amended the Adult Education Act of 1966 as follows:

1. Extend its provisions to include training from the 8th through the 12th grade levels. The unamended law covered only adult education through the 8th grade.

2. Lower the eligibility age under the Act from 18 to 16 to include high school dropouts, a group estimated at up to one million teenagers a year.

3. Establish state adult education advisory councils to aid in the development and evaluation of programs at the local level.

These amendments obviously increase the magnitude and scope of the problem. Unfortunately, the 1970 census reports are not yet available and current estimates based on the 1960 reports are probably invalid. All indications are, however, that we currently reach less than 10 percent of the target population of undereducation adults.

Local Concern. The job market for the functionally illiterate worker is basically an unskilled market. When he works it is either a day

job or an hourly paid job. There are no career ladders under such conditions. On work days one can see groups of men standing on particular street corners waiting to be hired for the day. The job he is waiting for usually has only one requirement, physical capability. Such a job does not provide unemployment compensation, sick leave, vacation, retirement, or promotion. There is little incentive for job pride or individual effort. In short, these conditions create poor worker morale and contribute to a high turn-over rate, absenteeism and the accompanying high cost of retraining and inefficiency.

Even if the low literate worker is employed in a factory, his low skill capability makes him very vulnerable. Many employers hire and fire on a regular schedule. Such a constant turn-over policy is only possible on low-skill jobs. As long as there is a low-skill labor force available, such a practice will continue to be profitable for the employer.

Crime Rates. The high drop-out rates, lack of employment opportunities, inadequate school opportunities, and low income all contribute to the high rate of crime prevalent in the low literate population and have real significance for corrections institutions' rehabilitation efforts.

Ignorance, unemployment, and poverty create frustration and bitterness. The illiterate or low literate man or woman lacks the essential prerequisite for self-support and full participation in society. This critical national problem is amplified by the rapidity of change that characterizes today's world and by the fact that automation continually lessens the need for unskilled workers. The undereducated are destined to become more and more alienated from society.

Population Characteristics

The undereducated adult has a number of characteristics and is influenced by a variety of environmental factors which preclude the use of traditional educational means and dictate the design of innovative new approaches to the problem.

Among the many variables are the following important factors affecting undereducated adult learners:

1. Has been unsuccessful or marginally successful in the traditional system,

2. Has feelings of doubt and insecurity associated with instructional demands,

3. Cannot perceive the relevance of traditional instruction to his immediate needs,

4. Resents and is ashamed of his educational deficiencies,

5. Education has a low priority in his hierarchy of needs,

6. Cannot effectively organize resources and activities to allow for additional educational experiences,

7. Seeks immediate gratification, cannot maintain long-range goals,

8. Needs a series of success experiences to compensate for a backlog of failures,

9. Needs individualized programs of instruction specifically designed to remedy deficiencies and to appeal to the learner's interest and motivations,

10. Initially needs constant encouragement and stimulation to start and maintain participation,

11. Needs easily accessable learning opportunities.

Failure of Traditional Approach

Traditional adult basic education programs have consistently been unable to reach the hard core low literate. Often, after intensive recruitment, the program is unable to hold the student because the curriculum is perceived as irrelevant to the population's immediate environment. The traditional adult basic education program has not offered the desired student personnel services necessary for the intensive instruction required to effectively motivate and teach the low literate.

Evidence tends to indicate that the regular average of four to six hours per week of adult basic education instruction is not enough to sustain motivation or clearly demonstrate progress to the student. The low literate 0-3 grade, needs intensive accelerated learning opportunities. The current approach of providing only four to six hours of adult basic education instruction per week presents the low literate student with a very undesirable and practically insurmountable task of having to attend adult basic education classes on a piecemeal basis for an average of three to five years to reach the 4th grade level and from 10 to 15 years to go from 0 grade to high school equivalency.

The fact that current programs are failing to recruit and hold adult basic education students with a desirable degree of efficiency is directly related to the program's lack of stimulating methods and the small quantity, i.e., time of instruction offered. The basic problem which has been prominent throughout the national adult basic education program is how to recruit, enroll, retain, and teach the hardcore low literate.

The problem, therefore, is multifaceted and the general purpose of this paper is to explore the possible contributions of advanced educational technology, i.e., hardware and software to the solution of the

adult basic education problem. More specifically, this paper intends to:

1. Discuss the general characteristics of hardware and software,

2. Explore advantages and disadvantages of representative examples of different types of hardware and software,

3. Discuss possible classroom applications,

4. Suggest resources and selection criteria for each, and

5. Discuss several alternative utilization models.

Advanced Technology

The modern adult educator has a tremendous array of advanced educational technology at his disposal. The great variety of hardware and software available in the current educational market provides the means to truly accelerate and individualize instruction. After centuries of lecturing, the modern educator may now be truly innovative in motivating and teaching students, even if the institutions of high education are still lecturing about innovation.

Advanced educational technology, i.e., hardware and software, must be utilized within the framework of a curriculum rationale or a system. Before discussing the advantages and disadvantages of advanced educational technology, awareness of selected learning principles that have implications for hardware and software utilizations should be developed.

Learning Theories and Principles

There is an incomprehensible conglomeration of learning theories which are aligned with three basic schools or types, i.e., the stimulus response, the gestalt and the eclectic. Each group and each theoretical position has its definitions of learning. These groups stimulate thought and research that will hopefully lead to some integrated exploration of the learning process. Despite the numerous theoretical positions and the variety of answers to our learning process questions, Hilgard (1956) lists several areas or principles of learning on which most theorists tend to agree:

1. In deciding who should learn what, the capacities of the learner are very important. Brighter people can learn things less bright ones cannot learn; in general, older children can learn more readily than younger ones; the decline of ability with age in the adult years depends upon what it is being learned.

2. A motivated learner acquires what he learns more readily than one who is not motivated. The relevant motives

include both general and specific ones, for example: desire to learn, need for achievement (general), and desire for a certain reward or to avoid a threatened punishment (specific).

3. Motivation that is too intense, especially pain, anxiety, fear, may be accompanied by distracting emotional states so that excessive motivation may be less effective than moderate motivation for learning some kinds of tasks, especially those involving different discriminations.

4. Learning under the control of reward is usually preferable to learning under the control of punishment. Correspondingly, learning motivated by success is preferable to learning motivated by failure. Even though the theoretical issue is still unresolved, the practical outcome must take into account the social by-products, which tend to be more favorable under reward than under punishment.

5. Learning under intrinsic motivation is preferable to learning under extrinsic motivation.

6. Tolerance for failure is best taught through providing a backlog of success that compensates for experienced failure.

7. Individuals need practice in setting realistic goals for themselves, goals neither so low as to elicit little effort nor so high as to foreordain to failure. Realistic goal-setting leads to more satisfactory improvement than unrealistic goal-setting.

8. The personal history of the individual, for example, his reaction to authority, may hamper or enhance his ability to learn from a given teacher.

9. Active participation by a learner is preferable to passive reception when learning, for example, from a lecture or a motion picture.

10. Meaningful materials and meaningful tasks are learned more readily than nonsense materials and more readily than tasks not understood by the learner.

11. There is no substitute for repetitive practice in the overlearning of skills, for instance, the performance of a concert pianist, or in the memorization of unrelated facts that have to be automatized.

12. Information about the nature of a good performance, knowledge of his own mistakes, and knowledge of successful results aid learning.

13. Transfer to new tasks will be better if, in learning, the learner can discover relationships for himself, and if he has experience during learning of applying the principles within a variety of tasks.

14. Spaced or distributed recalls are advantageous in fixing material that is to be long retained (pp. 486-487).

These areas of agreement have been validated in numerous research studies and provide fruitful guidelines for classroom practices.

Multi-media Instruction

Hardware and software, whether used singly or in various combinations offers the following advantages in the instructional situation:

1. Extends the master teacher or expert in time and space. The use of audio-visual records of teacher presentations allows students to be exposed to the best instruction available instead of limiting the quality to the local teacher's capabilities which, of course, range from excellent to terrible.

2. Provides the means for repetition and drill; these are important concepts that the teacher has neither the time or energy to provide.

3. Allows for individualization of instruction. Provides a variety of presentation means and materials to match a student's unique characteristics and his particular set of educational objectives.

4. Makes the teacher more efficient in that he may provide instruction for more students per day and the instruction provided will be more productive, i.e., quicker attainment based on individual desire and capability.

5. Creates and maintains greater degrees of student motivation and concentration.

6. Frees the teacher for greater humanization of instruction, i.e., the teacher has more time to analyze student needs, counsel and advise, design individual programs, and evaluate the instructional process in order to increase its efficiency.

The listed advantages are not complete and vary with the instructional environment. The mentioned advantages have been noted in a variety of studies and in the personal experiences of the author.

Advanced technology, like most human products, has disadvantages, especially if improperly or naively used. Knowles (1960) summarizes the

situation thusly:

> Unquestionably the newer media of mass communications has had a tremendous influence on the continuing learning of adults, although their specific efforts are difficult to prove or measure by research. No doubt some of these effects have been positive and some have been negative, as evaluated by adult educators and social philosophers. But the net effect seems to be in the direction of producing an environment more conducive to continuing learning (p. 334).

Ohliger (1968), in a review of the literature on mass media in adult education, discovered a minor theme throughout the literature which considers the possibility that "there are real dangers in technology--specifically arising from some of the new media of communications (p. 25)."

Rovan (1964) made the point that it is not the media that creates the danger, but how it is utilized by society. Halloran (1967), in a UNESCO report, concluded that the lower the level of education of the viewers, the more easily they are influenced by media. This factor could be either an advantage or a disadvantage.

Perhaps the major overall disadvantage to be overcome in the application of advanced educational technology is the anxiety and resistance of the teachers who feel that their roles and positions are being threatened.

In fact their role is changeing from custodian and purveyor of knowledge to designer and manager of the learning environment; to providing motivation and to serving as counselor and advisor. Indeed, under close scrutiny, the teacher's role will become a more exciting and humane role, a more productive and satisfying role.

General Disadvantages in Media Utilization

A partial list of general disadvantages in the use of hardware and software are:

1. Teacher will develop too great a dependency and will lose expertise in his content areas.

2. Too many types of similar hardware and software will overwhelm the teacher and hopelessly bog down the instructional process because the teacher cannot realistically be expected to master the utilization of 15 to 20 different types of hardware and software.

3. Purchase of useless "gadgets" because of good sales pitch.

4. Hardware that is unreliable, i.e., high frequency of breakdown and poor repair service.

5. Hardware that does not have accompanying software available.

6. Software that is poorly designed or developed, i.e., children's programs packaged for adults.

7. Complex systems that are difficult for teachers and students to operate.

8. Hardware and software that are difficult to move and store, i.e., bulky, heavy, fragile, poorly designed.

9. Hardware that are detrimental to the learning environment, i.e., noisy, bright lights, heat producing, smelly, danger due to shocks or radiation.

10. Software that are not reliable or properly validated, i.e., absent or poor teacher's manual, objectives not stated, student placement procedures absent or poor, irrelevant content.

11. Software that are consumable and hard to replace, i.e., costly and extended delivery periods.

12. Some students and teachers have natural fear and suspicion of machines.

13. Possibility of expensive losses due to theft, fire, depreciation, wear.

The lists of general advantages and disadvantages associated with educational hardware and software could be expanded ad infinitum.

The findings of Swets (1962) and reviews by Holland (1961) support the conclusions of Stolurow and Davis (1966) that after examing numerous comparative studies there are typically no significant differences in the relative effectiveness of teaching machines and programmed texts.

Numerous other studies and experience of the author suggests that multi-media or multi-sensory presentations, if properly designed, are more efficient for accomplishing educational objectives than single sensory inputs. The effectiveness of multi-sensory approaches is always a function of the educational objectives and the students' characteristics.

If a generality or principle can be offered, and usually they are inappropriate, it would be that in the selection and utilization of educational hardware and software, the simple is preferable to the complex.

Hardware

Hardware Defined

Hardware defined from an educational viewpoint means those machines,

physical equipment, and audio-vidual devices, that perform a physical function in the presentation of educational software. They range in complexity from the simple filmstrip viewer or spring loaded reading pacer to computer controlled learning carrels containing cathode ray displays, image projectors, talking typewriters and audio record and playback mechanisms.

Sources and Classifications

There are thousands of different types of educational hardware each with its varying specifications and functions. The National Audio-Visual Association publishes an annual Audio-Visual Equipment Directory. This directory contains the most complete listings and descriptions of educational hardware available. Over 2,000 pieces of equipment are listed under 27 different categories. This directory is an invaluable resource to the instructor or administrator who is currently using, or intends to purchase instructional hardware.

When one realizes the overwhelming variety of educational hardware available on the current market, it becomes evident that there are numerous devices of the same type for accomplishing any given educational objective, i.e., there are over 55 different 16mm motion picture projectors, over 40 different filmstrip projectors, over 125 tape recorders and playbacks, and over 22 reading machines.

The problem then becomes one of selection. Very few of the educational hardware currently on the market have been adequately validated for instructional use, and in the cases where evidence has been collected, it is not readily available to the prospective consumer. In other words, a great amount of research has been conducted with educational hardware, but the results of these studies are not usually available in the current sales literature. When such studies are reported to the prospective consumer they usually are not generalizable because of inadequate research design, i.e., non-representative sample, lack of control of extraneous variables, small numbers in biased samples.

It is essential that the user of educational hardware use some broad selection criteria to narrow his choices and to eliminate obvious poor choices. In addition the users should conduct their own studies and evaluations to determine the efficiency and appropriateness of various types of educational hardware.

Suggested Selection Criteria

It is difficult to consider hardware apart from software in that hardware is useless without available and appropriate software. Many of the selection criteria apply to both and it is impossible to evaluate hardware separate from software.

1. In the selection of hardware, cost is usually a major factor.

Rigney and Fry (1961) outlined a number of cost items that influence expenditures for instruction; these include:

a. Cost per unit: program, student, and machine

b. Investment: initial and long-term

c. Training time per student

d. Quality of students required, aptitude, experience, and so on

e. Quality of instructors required, credentials, experience, and so on

f. Logistics: space, power, maintenance requirements; and program reusability, useful life

g. An additional cost would be updating or modernization expenses.

2. A very important consideration in the selection of all hardware is what types and quality of software are available for use with the equipment. This rather obvious criterion is repeatedly overlooked and numerous existing gadgets are rusting on shelves because appropriate films, tapes, workbooks, and slides are not available. The software that is available will quite often not work with a particular though similar piece of equipment, i.e., a lot of materials or software are designed to operate with a certain type of brand name of hardware and are designed to be incompatible with competing types.

3. The amount of training required for the instructor to learn to efficiently operate the equipment.

4. The presence and quality of the instruction manual. Instructions should be clear and concise.

5. Availibility and quality of service. All machines require periodic adjustments and repairs. The company supplying the hardware should have readily available trained servicemen and parts.

6. The reputation and reliability of the producer. Does the equipment have a reasonable warranty or guarantee? Does the company honor the warranty? Words and sales pitches are plentiful, judge past performance. It is relevant to note that about 80 percent of the proliferating multi-media instructional system type companies do not last two years. This is not to say that their products are inferior, but numerous innovative and creative new companies fail each

These criteria will allow the relative comparison of several possible hardware choices and narrow the field to two or three possible selections.

If this selection process is followed-up with in-use evaluations and controlled comparisons, the result should be adequate for determining which types of hardware are most effective for accomplishing certain educational objectives with a particular set of student characteristics.

Selected Hardware Types

It is beyond the scope of this paper to examine the thousands of educational hardware devices available for instructional use. Selected examples representative of several different types of hardware will be discussed.

The characteristics of educational hardware and software are highly interdependent and correlated. It is impractical to discuss the characteristics of a specific piece of equipment without discussing the correlated software. Hardware and software function as a system in the instructional process. After a general discussion of several types or classifications of hardware, the various class or types of software will be discussed in detail with specific characteristics and examples of each.

Type I - Projection Equipment. Projection equipment includes a wide variety of machines which visually project an enlarged image on a screen or surface. The images are projected from films, magnetic tapes, transparencies, and real objects. Projection equipment includes the following:

1. 16mm and 8mm Motion Picture Equipment
2. Filmstrip Projectors and Previewers
3. Slide Projectors
4. Random Access Projectors
5. Opaque Projectors
6. Overhead Projectors
7. Micro-projectors
8. Special Purpose Projection Equipment

Projection equipment has the following advantages and disadvantages in instructional use:

Advantages

1. Provides motion or still pictures

2. Projects images over a distance

3. Provides for linear or random viewing, i.e., flexibility

4. Fairly reliable

5. Stimulates student interest

Disadvantages

1. Often noisy and distracting

2. May breakdown during presentation

3. Requires training and skill to use

4. Often appropriate software unavailable

5. Usually expensive compared with books

6. Teacher made software, i.e., films, transparencies of inferior quality

7. Maintenance and repair often inadequate or requires long periods of time

8. Is often used as a passive teaching method, i.e., student not allowed to interact or respond.

Type II - Audio Record and Playback Equipment. Audio hardware includes a variety of equipment which mechanically or electronically captures sound and stores it for subsequent playback. The sounds are recorded to reel, cartridge or cassette. Audio record and playback equipment includes:

1. Record players

2. Reel to reel tape recorders and playback

3. Cartridge recorders and playbacks

4. Cassette recorders and playbacks

The above equipment is available with monoral or stereophonic record and playback capabilities.

Audio equipment has the following advantages and disadvantages in instructional use:

Advantages

1. Provides sound with sight

2. Stimulates student interest

3. Maintains student attention and motivation

4. Allows capture of real life experiences

5. Provides for stimulation of past and future events

6. Transmits sound over long or short distances

7. Highly flexible in instructional use, can be segmented and stopped or started at will

Disadvantages

1. Sound quality deteriorates over time and with each playback

2. May breakdown during presentation

3. Appropriate software often unavailable

4. Requires skill and training for proper use

5. Maintenance and repairs often unavailable and time consuming

Type III - Multi-media Equipment. This group of educational hardware provides various means for combining sight and sound. This group includes:

1. Video tape systems

2. Sound filmstrip devices

3. Slide-tape recording combinations

4. Print and sound systems

The teacher may combine various types of hardware and software in many unique and creative manners. Several of these models will be discussed in the section on Multi-media Instructional Strategies.

The examples discussed have been combined by the manufacturer, and mechanisms for control and synchronization are provided. Multi-media equipment has the following advantages and disadvantages:

Advantages

1. Provides for combination of sight and sound

2. Allows for closer simulation of real life

3. Provides greater student interest, motivation, and interaction

4. Provides greater flexibility and has greater instructional application than sight or sound alone

5. Research indicates multi-sensory inputs are more efficient for presenting learning material

6. Allows utilization of a greater variety of software combinations

Disadvantages

1. Usually more complex to operate and program than single medium equipment

2. More likely to breakdown and requires greater maintenance than single medium equipment

3. Requires skill and training to properly utilize

4. Teacher may develop over-reliance on system

5. Teacher may feel threatened by a system that can simulate his performance

6. Usually more expensive than single medium equipment or texts

7. System may not allow student interaction and responses.

Software

Software may be defined as those materials that provide learning experiences. They include the various media that require hardware for presentation such as films, tapes, slides, loops, cassettes, records, and those that do not require hardware such as texts, workbooks, models, blackboards, maps, graphs, posters, and magazines.

Software or materials for learning experiences are available in an almost unending variety. In order to simplify the understanding of the ten characteristics of software, the various types will be classified in ten categories. The characteristics and examples of proper utilization will be discussed for each software category.

Category I - Printed Text Materials

Historically, educators have depended on print as the basic mode of educational communication. Currently good teaching clearly requires a variety of instructional materials and insightful combinations of various media. Brown, et al. (1969) discusse in detail the advantages and disadvantages of printed textbooks. The following advantages and disadvantages are adapted from their listings:

Advantages

1. Improvement of teaching practices. Texts increase teacher content mastery and efficiency through synthesis of expert opinion and current research. It helps the inexperienced teacher by providing special teaching aids, manuals, workbooks, and mastery testing.

2. Individualization of Instruction. With texts, students may proceed at their own rate. They allow different students to study different things at the same time. Allows for varying remedial and enrichment exercises.

3. Organization of Instruction. Provides an organizational structure and unifying force for a particular class by common reading experiences, questions, and assignments. Provides a logical sequence for class presentations.

4. Tutorial Contributions. Texts help the student learn how to learn, to read better, to weigh evidence and to solve problems. Challenging question and related study materials including good visual items, bibliographies and selected references stimulate active learning.

5. Economy. Texts are relatively inexpensive in actual per pupil costs when compared with other media.

Disadvantages

1. Texts tend to relieve the reader from having to think, to organize data, and to arrive at independent conclusions.

2. Texts often treat subjects to sketchily, i.e., provide insufficient knowledge and stimulate little enthusiasm.

3. Promotes the deadly routine of assigned readings and recitations.

4. Texts become quickly outdated and are often outdated when published.

5. Texts often lack vitality and fail to reflect innovative and promising developments (p. 86).

Instructional Trends in Textbooks. Brown and Norberg (1965) have identified several trends in the preparation and use of tests, some of the more relevant are listed below:

1. Less reliance on a single textbook. The use of a principal text and a number of supporting texts, pamphlets, periodicals, and audio visual materials, i.e., multi-media approach.

2. Increased availability of paperbacked materials.

3. Demand for innovations in textbook content, a circumstance resulting from curriculum reforms and the increasing rapidity with which new knowledge is discovered and old knowledge outdated.

4. Correlation of systems of materials, including films, filmstrips, recordings, workbooks, programmed materials, models, specimens, charts, in one kit or package.

5. Growing emphasis upon problem-oriented instruction as opposed to telling.

6. Recognition in textbooks of ethnic and racial diversity and the contributions of minority groups to the development of our country and the world (p. 179).

Expected Outcomes. The behavioral outcomes to be expected from textual materials will vary with the characteristics of the learners, the instructional environment, the teacher and the learning strategy involved. In spite of the wide use of textual materials, there has been remarkably little useful research conducted. The following research results have been summarized by Schramm (1955):

1. Combinations of media, i.e., textual with slides, tapes, and lectures are more effective than one medium alone.

2. Automatic gains do not come from using three senses instead of two unless the added channel truly supplements and gives added interpretation.

3. There are extremely wide tolerances in the ability of readers to profit from materials with different type sizes, length of lines and styles of type.

4. There is reader resistance to non-traditional formats, i.e., typewriter-set copy or non-justified right margins.

5. Readability formulas are not consistent from material to material and do not give proper recognition to comprehension.

6. General explanations with subordinate examples and special cases are superior to styles in which examples and principles have equal emphasis.

7. Overlap and repetition appear beneficial to comprehension, but the optimum amounts and kinds of varying types of instruction and media has not been established.

McMurray and Cronbach (1955) in the analysis of the functions of textbook materials identified four categories of verbal communication.

The categories and their characteristics are summarized as follows:

1. Narration and Description

   a. Communicate directly to reader

   b. Communicate selected values

   c. Provides vicarious experiences

   d. Encourages the habit of generalizing from selected examples

2. Prescriptions and Directives

   a. Imperative statements direct immediate action

   b. Impede creative divergent thought

   c. Summarizes ends of a logical or investigative process

3. Generalizations

   a. Report recurrent relations between events

   b. Simplifies and synthesizes vast amounts of knowledge

   c. Adds meaning to past and future experiences

4. Theoretic Statements

   a. Communicates the precise meaning and relationship between concepts within a systematic framework

   b. Assists in investigating events and formulating new knowledge

   c. Establishes plausibility by logical means

   d. Cannot be proven true or false by experience

Teachers should keep in mind that textual materials can be modified, rearranged, and adapted in order to produce desired outcomes. Textual materials should be viewed as aids and guides for instruction not as rigid structures or content that must be followed or mastered.

Programmed Texts. Programmed instruction is a process, i.e., planned sequence of learning experiences designed to produce a specific behavioral outcome. In its broadest sense it involves a variety of instructional strategies that incorporate the desirable features of:

1. Individualizing the presentation through branching techniques which allow remedial or enrichment supplements.

2. Allows student to be self-paced or progress at his own rate or at a controlled rate.

3. Provides immediate knowledge of results. Students can correct their own work.

4. Reduces time required for learning, i.e., is more efficient.

5. Reduces error rates and failures, allows the organizing of instruction into logical sequences and small steps.

6. Provides the opportunity for controlled experiementations with different instructional strategies.

7. Involves the student in the learning process. Student must respond frequently.

Any instructional presentation may be programmed. A lecture may be programmed as well as a multi-media kit. In this discussion programmed texts are treated as one example of programmed instruction. The techniques of programming have application in all media.

Types of Programmed Texts. There are two basic types of programming: linear and adaptive. Linear program received impetus as a result of Skinner's work in instrumental conditioning.

Thomas, et al. (1963) state:

> An important feature of linear programs is that the student actually writes down or constructs his own responses. Skinner believes that constructed responses make students think more deeply about the material and enable them to gain a greater understanding than would be possible from the use of multiple choice responses. The program, therefore, does not test the student, but teaches him through requiring him to make a positive, thoughtful, and free response (p. 16).

Branched on intrinsic programming is an outgrowth of differential psychology and was initially developed by Norman Crowder. The basic strategy was to use the students' responses to determine and control the order of presentation.

Thomas, et al. (1963) summarize the purposes of using linear programming:

1. To test understanding of material studies

2. To select remedial sequences

3. To afford practice in the concept involved

4. To keep the student working actively with the material

5. To motivate the student when he responds correctly (p. 18).

Jacobs, et al. (1966) state:

> Programmed instruction has been used for vocational training and for raising the general educational level of adults. It can be used in many different settings, as it does not necessarily require special facilities. It may be especially useful in teaching courses for which there is only a small demand (p. 19).

Category II - Still Pictures

The old adage, "One picture is worth a thousand words," is still true today. There is a wealth of still pictures available on practically every conceivable topic. The two basic classes of still pictures are flat opaque and film. Opaque pictures include paintings, sketches, cartoons, photographic prints. Film still pictures include slides, and filmstrips. As in the case with most instructional research, there is little research related to the use of still pictures in teaching. Spaulding's (1955) early review of research on pictorial illustration emphasized the following relevant findings:

1. The content of the pictures should relate to the interest and life style of the reader.

2. The content of the picture should be organized to follow natural eye movements.

3. Pictures create natural interest or curiosity.

4. Pictures are often abstract or viewed out of context, therefore, the viewers previous artistic and environmental experiences must be considered in selecting pictures for instructional use.

5. Pictures help the reader understand and remember written content (pp. 43-44).

Later research (Dwyer, 1967; Travers, 1964) has indicated that simple visual presentations with a limited concept is more effective than complex pictures or presentations. Often an abstract linear presentation is preferable to a realistic photograph.

Brown, Lewis, and Harcleroad (1969) indentify three separate types or levels of picture reading ability and five important points which should be considered when selecting still pictures for instructional use:

Levels of Picture Reading Ability

1. The reader recognizes particular objects and calls them by name.

2. He determines details in a picture and describes what he sees.

3. He draws inferences regarding past, current, or future action of the people or objects shown, and makes personal interpretations based on his individual background (p. 203).

Selection Criteria

1. Is the picture sufficiently interesting to catch and hold the interest of students with whom it will be used?

2. Is it sufficiently large and simple to be seen clearly?

3. Is the information it portrays important to the topic being studied?

4. Is the information accurate, truthful, up-to-date?

5. Is the picture well-reproduced, realistic, and attractive?

6. Does it provide clues as to size or scale, if needed (p. 205).

Film still pictures will be discussed in a later section. The advantages of flat opaque pictures include the following:

1. They are highly portable and can be passed around the class for individual inspection.

2. They are easily available and prepared for instructional use.

3. They can be projected and enlarged.

4. Simple to show, no equipment needed, i.e., hold up in front of class, place on board, pass around.

5. Stimulate creative expression.

6. Reduce verbal explanations and aid understanding of concepts.

7. Stimulate specific questions and discussion.

8. Still pictures may be used for student evaluation as well as instruction.

Still pictures offer the capability of individualizing and enriching all subjects. When used in conjunction with textual and audio visual

materials, they can be used to report and reinforce desired concepts and skills. The use of contrast, comparison, and continuity in utilizing still pictures for instructional purposes is most effective (Brown, 1967).

Contrast - Look for differences among objects, materials, and people. Contrast the new with old, near with far, known with unknown.

Compare - Look for similarities between pictures or portions of one picture.

Continuity - Look for organization logic with a picture or among a series of pictures. Temporal development, cause and effect and correlation should be evident.

Category III - Film

Films will be discussed in two major sub-divisions, motion films and still films. Motion pictures include 16mm and 8mm film. Still films include 35mm film strips, slides, and stereoscopic three-dimensional slide reels.

Motion Films. The rapid development of motion picture technology has provided a variety of types of motion pictures for instructional purposes. Among the types currently available are:

1. Short single concept films.
2. 8mm cartridge film loops.
3. Rear projection system for use in carrels or on desks.
4. "Massed" film series covering an entire subject.
5. Films designed for use with workbooks, texts, and other audio-visual devices, i.e., multi-media kits.

A. Types of Films

In general films may be classified as:

1. Documentary
2. Training or Instructional
3. Factual
4. Fictional and True Drama
5. Travelogues

6. Pictorial Reports

B. Instructional Advantages of Film

Films have the following advantages in teaching:

1. Film can capture past events for future study.

2. Provide sight and sound for realism.

3. Simplify complex abstractions.

4. Films can create or illustrate logical development of a concept.

5. Provide a common experience for discussion.

6. Bring experts and other enrichment into the classroom.

7. Overcome time and space restrictions; allow student to compress experiences.

8. Utilize color.

9. Can show microscopic or telescopic topics.

10. Stop motion, slow motion and speed-ups have special educational advantages for studying various natural phenomena.

C. Research on Film Use

There appears to be more research on film use than other media. Comprehensive reviews (Brown, et al., 1969; Greenhill, Reid, & MacLennon, 1967) of the research in instructional film reported the following relevant implications:

1. Students should be prepared in advance of the film showing. Special vocabularies or nomenclature should be learned in advance. The student should be told what he is expected to learn.

2. Ability to learn from films takes practice and improves with practice.

3. Note taking during films should not be encouraged. Stopping the film for discussion does contribute to learning.

4. Films should have built-in viewer activities and planned repetition and summaries.

5. Students can partially learn a skill by watching it on film and mentally practicing the skill.

6. Films on complex concepts and skills should be repeated several times over several days.

7. If a student is expected to transfer his learning to a different but related situation, the principle involved should be explained prior to the film showing and emphasized in the following discussions.

8. Students learning from films will vary with the individual's unique characteristics and environmental conditions.

D. Follow-Up Activities and Outcomes

After viewing a film, a variety of follow-up activities may be used to reinforce the film's content. The following are possibilities:

1. Practice the skill taught in the film. Use small groups with a group leader. Teacher roves from group to group.

2. Discuss the film. Analyze the content. Have small groups discuss and report on different aspects of the film. Have a debate.

3. Have written or oral examination.

4. Have a resource person on hand for questions and further discussion.

5. Utilize additional A-V materials for drill and practice.

6. Attempt to relate the film content to current environment.

7. Have students evaluate the film. Form an opinion and defend it.

8. Stop the film before the summary climax, or ending and have students write their own version of the ending.

Still Films

Still films include filmstrips, 35mm slides and stereoscopic slide reels. The characteristics of the three types are similar. The differences are in the mode of projection and film packaging.

Filmstrips are a series of still pictures in linear order on 35mm film. Slides are individually mounted and are not joined together. Stereo reels are 16mm stills mounted in pairs for three-dimensional viewing on a circular cardboard.

Research on Still Film Use. Many of the research findings related to motion pictures also apply to still films. A review of research

(Briggs, et al., 1965) suggests the following:

1. Filmstrips are as effective as motion pictures in teaching certain factual data.

2. Still pictures are not as effective as motion pictures in teaching skills and concepts involving motion.

3. Filmstrips and especially slides are more adaptable for individualizing instruction.

4. Still pictures used in conjunction with other media are more effective than either medium used alone.

Instructional Advantages - Outcomes of Still Films. Several of the more relevant uses of film strips in teaching were selected from a comprehensive listing by Brown (1969):

1. Provides basis for understanding symbols. Especially helpful in vocabulary development and reading.

2. Suitable for teaching skills to groups. Can be projected at various speeds and repeated in whole or part.

3. To consolidate and review learning produced with other media.

4. Stimulates asthetic appreciation of form and color.

5. Presents factual data in visual form.

6. To supplement and reinforce learning from other experiences.

7. To provide opportunities for individual drill and practice.

8. To focus group attention.

Category IV - Transparencies

The overhead projection of transparencies has become the most popular educational media currently in use. This is probably due to its simplicity of operation, flexibility of use and economy of cost and maintenance. Most school systems and institutions recommend that there should be one in every classroom.

Instructional Advantages of Transparencies.

1. Image may be projected and enlarged as desired.

2. Teacher may write or make notes on the transparency.

3. Large variety of commerically prepared slides available.

4. Simplicity of operation and preparation of media requires relatively little degree of training and skill compared to other media.

5. The rate of presentation can be controlled. Material may be repeated.

6. Composite images can be built with successive overlays in order to teach complex concepts and skills.

7. Motion can be simulated.

8. Can be used with other media, i.e., slides, tapes.

Instructional Uses and Outcomes. Teachers offer little resistance to using overhead transparencies because of their flexibility and simplicity. They can be used in numerous creative ways. Several of the more popular uses are listed:

1. Real objects can be projected and students asked to identify the images.

2. Students can prepare and discuss their own transparencies as a project.

3. Portions of the transparency can be exposed or covered at will to test comprehension and make developmental presentations.

4. Pictures can be shown and then labels written on during presentation, i.e., the transparency may be modified in use.

5. Problems can be presented and their solutions worked out on the transparency.

6. The teacher may move symbols and objects around on the transparency to simulate movements, trends, changes.

Category V - Television

Television is a powerful education tool. The use of educational television is rapidly increasing because it is a convenient and economical means of reaching the masses. Brown, et al. (1969) cited the following instructional advantages of television:

1. It combines the best elements of radio, by going right into the home or classroom, with the potency of motion pictures.

2. It is capable of helping to overcome learning barriers for many persons by presenting important ideas, helping mold attitudes, and providing information in ways which demand neither high verbal proficiency nor physical presence at the scene of action.

3. It is a means of multiplying "personal" contacts for outstanding television instructors with students and adults all over the country or the world.

4. It is capable of helping to bring about needed social improvements and developments.

5. It capitalizes upon immediacy, upon the "here and now" aspects of communication.

6. It combines with other media to bring more and different kinds of information to the classroom for individualized study, programmed instruction, and a number of new teaching-learning techniques (p. 297).

Research on Instructional Television. There is a large amount of research in regard to ETV and Instructional Television. The majority of the findings indicate that television is a valid and effective instructional media. As is the case with all media, it must be properly matched with the students' characteristics, the subject content, and the instructional environment. Schramm (1962) reports that in 65 percent of the comparisons between televised and classroom teaching, there is no significant difference. Twenty-one percent learned significantly more with television and 14 percent learned less.

Ohliger (1968) in a review of recent literature on mass media in adult education reported the following:

1. ETV is most effective when integrated with the conventional educational system.

2. Television pays off in terms of quality of instruction and in using volunteer teachers. By using television, partially qualified teachers can be utilized to instruct literacy classes, i.e., para-professional aides.

3. Approximately 53 percent of the adults enrolled in ETV literacy courses complete their training.

Instructional Uses and Outcomes.

1. As with all instructional media, preliminary planning is essential. Students should be briefed on the content and prepared in regard to vocabulary level.

2. Physical arrangements require proper seating, lighting, and acoustics.

3. Follow-up activities should be planned to reinforce the televised content. Other AV media and texts should be used to supplement the television presentation.

4. Zoom lens allow magnification and can be used for close up of detail in all subject areas, especially science.

5. Closed circuit portable TV and video tape have unique teaching capabilities. Through micro-teaching concepts a variety of simulation and practicum experiences can be taught, previewed, and reinforced. A special advantage is that a student may practice a skill and then immediately observe his performance, i.e., instant playback. This technique has a host of creative applications.

All of the instructional uses and outcomes listed in the motion films section are applicable to television.

Evaluating Television Programs. Brown et al. (1969) listed numerous factors that should be considered when evaluating an instructional TV presentation; several of the more important follow:

1. Was the telecast of value as a teaching aid and as resource material?

2. How would you rate pupil interest?

3. Did demonstrations of materials show up satisfactorily?

4. Are there any specific activities or subjects you would like to have presented on television for classroom use?

5. What outcomes resulted, reading, trips, vocabulary, discussions?

6. Do you have criticisms or suggestions?

7. Was the program clearly related to the curriculum?

8. Was there variety and interest in presentation?

9. Did the program bring experiences, materials, or teaching skills which you, as a teacher, could not supply (p. 312)?

Future of Instructional Television. The exciting technical development of video cassettes promises to revolutionize instructional television. This compact unit currently under development will be placed on

top of or near any convenient TV receiver. Video cassettes, similar to audio-cassettes, can be plugged in and played as desired.

Several of the features of video cassettes which distinguish it from broadcast TV are:

1. The student has individual control over the program and can use freeze-frame, fast forward and reverse and slow motion.

2. It allows instant viewer response and machine feedback for drill and practice and reinforcement through immediate knowledge of results.

3. Students may regulate their own progress and supply their own motivation. Teacher may observe reactions of groups to presentations and stop the program at any point for discussion and clarification.

Gabor (1971) noted a major feature of video-cassettes is "that it does away with the limitations of time, curriculum and space. The current pattern of taking course x, at time y, in building z becomes obsolete. Through the video cassette a student can program any course he wants, at his time of maximum learning, in an area convenient to himself (p. 5)."

Cassettes may be developed on a great variety of topics which can be used to design individualized programs of study. The video cassette will allow large scale independent study. This excellent new technique and product of technology when combined with other teaching methods will be a powerful tool in our quest to provide true universal education.

The National Education Media Study Panel (U.S.O.E., 1964) made the following statements:

1. The modern teacher has books, guides, periodicals, films, tapes, slides, records, laboratory equipment; some have language laboratories; and soon many of them will have programmed self-instructional materials. The basic question, therefore, is not simply how to use television alone, but rather how to combine it most effectively with other learning experiences and resources.

2. The well-planned television program can motivate students, guide and sharpen their reading by providing background and demonstrations, encourage responsibility for independent learning, arouse curiosity and develop new insights and the excitement of discovery. The medium is so flexible that it need never be used merely to promulgate the old lecture method and the idea that good teaching is "telling" (p. 5).

Category VI - Audio Materials

Audio materials are those types of software that capture sound via recording and store it for subsequent playback. The two major types of audio software are magnetic tape and plastic discs.

Anyone who remembers those "exciting days of yester year and the hoof beats of the great horse Silver," "knows as the shadow knows," that sound is a highly captivating medium. Observations of concert goers and the teenager dancing down a street with a transistor radio glued to his ear is aware of the concentration and emotion evoked by sound.

This discussion focuses on the software or recorded aspects of audio materials. The features discussed, however, are applicable to live broadcasts; and the creative teacher will arrange to either record relevant live programs or allow his students to listen to the program "live."

It has been reported that the average adult spends 70 percent of the day in verbal communication and approximately 45 percent of that time is spent listening.

Advantages of Audio-Materials.

1. Permits economical and simple recording and duplication of sound.

2. Allows synchronization of sound with a variety of other hardware and software.

3. It is easily transportable and facilitates independent study.

4. Allows alternation and instructional programming of natural or artificially produced sounds.

5. Profits from students' natural motivation and curiosity regarding sounds.

6. Allows students and teachers to hear and evaluate their own performance.

7. Allows students to hear progress in their own development of speaking and reading skills.

8. Presentations and quality may be perfected through editing.

9. Materials may be exactly controlled for research purposes, i.e., speed of presentation, repetition, sound levels, length.

Instructional Uses of Audio Materials. Four instructional uses of audio materials are described below.

A. Improving Listening Skills. The use of audio materials implies the necessity for developing certain degrees of listening skill. Brown, et al. (1969) listed the following typical classroom activities for developing of listening skills:

1. Directing and maintaining attention. Ask students to close their eyes for a few seconds and then to list the source of every different sound heard.

2. Following directions. Using prepared worksheets, have students follow directions ("Put an X on . . ." "Circle M"). Ask students to listen to and repeat aloud a set of directions such as might be given to a traveler.

3. Using auditory analysis. Read a series of nonsense syllables (or use foreign language phrases) and ask students to repeat them. Play sound effects records and ask students to identify sound sources.

4. Using context in listening. Read aloud sentences containing unfamiliar words, determine the accuracy of student understanding of their meaning, and discuss clues provided by their context.

5. Distinguishing relevant and irrelevant information. Read sentences containing poorly chosen or inappropriate words and ask students to identify them.

6. Finding main ideas and important details. Read aloud a short selection and ask students to give it a title.

7. Finding sequence. Read aloud a story containing a number of events, then ask students to restate them in their own words and in order of occurrence.

8. Listening for appreciation. Use any of the multitude of excellently prepared recorded materials related to this purpose: poetry readings, dramatizations, monologues, and the like (pp. 330-331).

In the previous list of activities, a teacher may substitute "play a recorded selection" for "read."

B. Live Broadcasts. A variety of instructional programs are broadcast on commercial and public-service stations. Pre-broadcast information allows proper planning and utilization of radio broadcasts. This information may be obtained directly from the following sources:

1. Radio Stations

2. County and District Instructional Center

3. State Departments of Education

4. College and University Schools of Education and Continuing Education Programs

5. National Networks, NBC, CBS, and ABC.

Brown, et al. (1969) suggest the following steps to develop student readiness to listen to live or recorded audio presentations:

1. Identify the program - its title, the participants, or the circumstances surrounding its production.

2. Give additional interesting background information.

3. Elicit from the group several key questions for which the program should provide information and ideas.

4. Place on the board a list of key words or phrases in the program and explain their meanings when necessary.

5. Explain why students are to listen to the material, how it relates to work under way, what they are expected to do during or after the experience, and how they are expected to profit from it (p. 339).

C. Simulating Radio Broadcasting. This innovative use of the tape recorder provides a stimulating activity that gives students practice in program planning, script writing, acting, producing sound effects, and editing. The typical steps in simulating radio broadcasts are also useful in television simulations and include the following activities:

1. Select a topic or subject for simulation. The topic should have instructional relevance and elicit high student interest.

2. Plan the program, construct a story board or outline of the programs flow.

3. Write the scripts, specify sound effects, narration. This phase should involve student research to authenticate the production. Explore various technical aspects of the medium.

4. Dramatize the production. Cast actors, select narrators, musicians, technicians, sound effects, directors.

5. Practice and rehearse the production, edit and re-take recordings.

6. Produce final recording.

7. Simulate broadcast. Students can be asked to critique the program and recommend changes.

D. Listening Laboratories. Language laboratories have proven quite successful. Complex systems comprised of a centralized unit capable of playing and transmitting a variety of programs to individual remote terminals or carrels and simple single unit systems such as the language master are being used to offer instruction in English as a second language, foreign languages, mathematics, reading, and a variety of interest areas.

One innovative use of sound involved using dictaphones for implementing the language experience approach to teaching reading (McClosky, 1971). Students who cannot or will not write, can dictate stories which are recorded and later transcribed. The student then listens to the recording and follows the script that was typed, thus forming oral and visual association clues between the sounds and the printed words.

Strang (1964) states: "In the language experience approach the student's account of his own experiences or thoughts is used as reading material (p. 30)." Students have a high interest in their own experiences. Coupling this approach with visual accounts of the experience would greatly reinforce the auditory experience and provide the student with a sight vocabulary and aid in development of word attack skills. Most significant is that it allows a non-reader to experience almost instant reading success.

Recording of music has unlimited possibilities for teaching a variety of subjects as well as music appreciation. Music may be used to stimulate interest, create emotions and dramatize a variety of usually dull subjects. The following instructional activities facilitated by the language laboratory have equal relevance for adult basic education utilization:

1. All students can listen to one lesson at the same time, or individual students or groups can listen to different ent lessons.

2. Students can listen and respond aloud, hearing both lesson material and their own responses through earphones. The term "audio-active response" is used to describe this procedure.

3. Students can listen to master material and respond aloud, recording their responses on a tape recorder. They or the instructor can replay it for evaluation either immediately or later.

4. During student practice in the laboratory, the instructor can use a communication system to listen to or instruct individual students or groups, while others continue unsupervised practice.

5. Students can take oral tests, recording their responses for subsequent evaluation by the instructor.

6. Student laboratory practice can be guided entirely by prerecorded instructions prepared by the instructor and interspersed with lesson material.

7. Visual materials, such as slides or filmstrips, can be coordinated automatically with taped lessons, providing either pictorial or written stimuli to elicit student responses (Brown, et al., p. 347).

Category VII - Realia

Realia has been defined as real things and their models. One of the accepted principles of learning is that the closer the learning experience is to reality the more effective the learning experience and the greater the possibility of transfer to new situations.

In addition to the actual objects, i.e., live animals, plants, insects, rocks, the following additional types of realia are available for instruction:

1. Modified real things

2. Model of real things

Modified Real Things. Modified real include specimens that have been specially prepared and changed from their normal appearance for specific purposes.

Models of Real Things. Models include miniatures, exact copies, scale copies, cutaways, or exploded views, and mockups that actually perform certain functions, i.e., link trainer, pumping hearts, radio circuitry. These models include a large variety of instructional kits that demonstrate principles and concepts and allow practice in specific skills.

The process of developing, selecting, and collecting realia has tremendous classroom application. The students natural interest in real things and its abundant availability affords the teacher an often overlooked educational resource.

Multi-Media Instruction

The wide availability of instructional media has led to the development of numerous new educational resources. The current emphasis on multi-media instruction and individualized instruction has created two

especially exciting new types of facilities.

The Adult Learning Center

As a response to the unique educational requirements of the undereducated adult and the failure of the traditional approach to initially train or to subsequently salvage their failures, the Accelerated Learning Center concept has emerged.

The learning center or laboratory has evolved from a narrowly conceived single concept programmed instruction class to the current programmed multi-media individualized learning approach. The modern learning center concept employs the following educational features and instructional strategies:

1. Applies the latest programmed learning techniques, i.e., specifies objectives, assesses learner capabities, designs learning experiences and constantly evaluates the total process for modification of objectives and methods.

2. Utilizes the latest advanced educational technology, i.e., modern programmed learning systems, audio visual devices, teaching machines, programmed texts, films, slides.

3. Designs an individualized program of instruction for each participant which incorporates a variety of innovative techniques and the best of proven traditional methods; small groups, field trips, projects, role playing, microteaching.

4. Each individual proceeds at his own rate and according to his own attendance schedule. Non-graded instructional approach, i.e., classes do not meet at a specific time as there are no classes, per se, but group activities and presentations are provided according to interest and individualized schedules that coincide.

5. Utilizes learning coordinators and instructional assistants who conduct and manage the learning experiences, advise students, and maintain student records.

6. Places the major emphasis and responsibility for learning on the student. The instructional staff shares the responsibility.

The listed features of the learning center concept includes flexibility of scheduling, individualized instruction and the latest programmed learning techniques which accelerate learning. These features make the instructional process more efficient and uniquely qualifies this approach for meeting the instructional specifications of the undereducated adult.

In fact, the learning center approach emerged as a response to the failure of the traditional system to accommodate the special needs of elementary and secondary remedial and enrichment programs, the high school drop-out and the undereducated adult.

Growing Success. The learning center approach is spreading and has been successfully used in a variety of instructional settings across the nation. Accelerated Learning Centers are currently operating in some 30 states. North Carolina has successful learning laboratories in all of its community colleges and vocational-technical centers. In addition, they operate some 25 mini-labs in churches, neighborhood centers.

The Adult Education Division of the Department of Public Instruction of Virginia is currently operating 18 Adult Accelerated Learning Centers. The most recent addition is located in Richmond. The Richmond Center opened in August of 1970. A workshop was conducted by the author and the State Department of Adult Education prior to the opening date. The Center has a current enrollment of over 800 students and immediate plans for expansion are under way.

During the first National Institute for training state and university level adult basic education personnel in the techniques of computer-assisted and programmed instruction conducted by the author in August of 1969, some 38 university and state level adult educators indicated their intention to establish Adult Learning Centers in their communities and on their campuses.

Accelerated Learning Center Research. Research data and descriptive program statistics indicate the following trends and implications:

1. The centers are effective vehicles for implementing programmed learning techniques.

2. The centers provide the flexibility of scheduling and the variety of instructional strategies required for individualizing instruction.

3. The centers attract, accommodate and maintain learner participation better than formalized classroom approaches.

4. Learning centers accomplish stated educational objectives more efficiently than formalized traditional approaches, i.e., lower cost per student hour of instruction and accelerated attainment of projected grade levels.

Educational Media Centers

Media centers are being established as essential components of modern libraries and as separate entities. Media centers have evolved from

storage functions to dissemination, demonstration, and utilization centers.

A well-equipped media center should be expected to perform the following functions:

1. Provide professional audio-visual services to students and faculty, i.e., produce creative professional software.

2. Design individualized media mixes to accomplish specified educational objectives.

3. Display and demonstrate the latest and most effective audio-visual devices.

4. Disseminate information concerning audio-visual resources available in the center and elsewhere.

5. Conduct research concerning the effectiveness of various media in accomplishing specific educational objectives with selected types of students.

The Joint Standards Committee of the Department of Audio-Visual Instruction (NEA) and the American Association of School Librarians have developed quantative standards for Education Media Programs.

It appears that the increasing availability of instructional media and advancing technology will produce numerous innovative instructional systems for years to come. The teacher of the present and the future must master the art of utilizing these instructional resources. To merely know an area and be able to lecture or talk about it will not be acceptable. If the modern teacher does not master educational media and the new learning strategies for its implementation, he will be replaced by the media.

References

Briggs, L. J., and others. Instructional media: A procedure for the design of multimedia instruction, a critical review of research and suggestions for future research. Palo Alto: America Institute for Research, 1965.

Brown, J. W., & Norberg, K. Administering educational media. New York: McGraw Hill, 1965.

Brown, J. W., Lewis, R. B., & Harcleroad, F. F. AV instruction: Media and methods. New York: McGraw Hill, 1969.

Dwyer, F. M., Jr. Adapting visual illustrations for effective learning. Harvard Education Review, 1967, 37, 250-263.

Gabor, S. C. The video cassette as an educational reality. Paper presented to New York Conference on the new medium, New York, May 13, 1971.

Greenhill, L. P., Reid, C., & MacLennan, D. Research in instructional television and film. Washington: Bureau of Research, USOE, 1967.

Hilgard, E. R. Theories of learning (2nd ed.). New York: Appleton-Century-Crofts, 1956.

Holland, J. G. Evaluating teaching machines and programs. Teachers College Record, 1961, LXII, 56-65.

Jacobs, P. I., Maier, M. H., & Stolourow, L. A guide to evaluating self-instructional programs. New York: Holt, Rinehart and Winston, 1966.

Kerlinger, F. N. Foundations of behavioral research. New York: Holt, Rinehart and Winston, 1964.

Knowles, M. S. (Ed.). Handbook of adult education in the United States. Chicago: Adult Education Association, 1960.

McMurray, F., & Cronbach, L. J. The proper function of text materials. In L. J. Cronbach (Ed.), Text materials in modern education. Urbana: University of Illinois, 1955.

Ohliger, J. The mass media in adult education: A review of recent literature. New York: ERIC Clearinghouse on Adult Education, 1968.

Rigney, J. W., & Fry, E. G. A survey and analysis of current teaching machine programs and programming. Los Angeles: University of Southern California, Dept. of Psychology, 1961, Technical Report 31.

Rovan, J. Television and adult education. 1964, 15, p. 6.

Schramm, W. The publishing process. In Lee J. Cronbach (Ed.), Text materials in modern education. Urbana: University of Illinois, 1955.

Schramm, W. What we know about learning from instructional television. Educational television: The next ten years. Standford: Institute for Communications Research, 1962.

Spaulding, S. Research on pictorial illustrations. Audio-Visual Communication Review, 1955, 3, 43-44.

Stolurow, L. M., & Davis, D. Teaching machines and computer based systems. In R. Glaser (Ed.), Teaching machines and programmed learning, II. Washington, D. C.: National Education Association, 1966.

Swets, J. A. Learning to identify non verbal sounds: An application of a computer as a teaching machine. Research report. Cambridge:

Naval Training Development Center, 1962.

Thomas, C. A. and others. Programmed learning in perspective. Chicago: Educational Methods, 1963.

Travers, R. M. The transmission of information to human receivers. Audio-Visual Communication Review, 1964, 12, 373-385.

UNESCO. Mass media in adult education. Prague: Czechoslovakian UNESCO Commission, 1967.

United States Office of Education. Educational television: The next ten years. Washington: Government Printing Office, 1964.

HARDWARE AND SOFTWARE IN CORRECTIONS EDUCATION

Edgar M. Easley
Communication and Education Services, Inc.
Los Angeles, California

Hardware Use in Teaching Educationally Disadvantaged

This paper opens with a discussion of hardware rather than software, and for a good reason. The subject of which hardware is useful in adult basic education, and the determination of the costs of that hardware, is essential in reviewing the kinds of resource allocations that correctional institutions can utilize. I propose some revolutionary concepts regarding the utilization of hardware. The first principle is that hardware must not only produce a cognitive effect, but that it should enter into the other domains as well. More and more research, as done by Dr. James Farmer, UCLA, and Dr. John Peters, University of Tennessee, shows that affective behavior is modified by instructional hardware. This is not a statement that will reduce the importance of cognitive gain in instructional hardware, but it is a statement of the effect that accrues in the affective, psychomotor, and volitional domains concommitant with cognitive gain. There are those who would totally overlook the importance of these gains when discussing the importance of instructional hardware. They are totally tied to the improvement in grade level scores.

Instructional hardware ranges from the simple audio-tape recorder to sophisticated and expensive terminal computer units with multi-sensory apparatus. Which of these is most useful in a question that can only be determined by looking at the terminal objectives of the program and at the kinds of students enrolled in the program. Often the instructional directors of institutions are looking for the panacea--total instructional hardware.

The determination of which instructional hardware to obtain might follow this format:

1. Review the total hardware available.

    Audio-tapes
    Slide-tapes
    Slide projectors
    Motion picture projectors
    Cameras
    Video-tapes
    Console computers

Many of these operate in tandem or jointly, such as:

Slide projectors and film loops
Computer consoles and typewriters
Computer consoles and cathode screens
Audio-tapes and screen presentations
Photo screens in sequential operations
Photo screens in binary or tracking operations
Audio devices with sequential operations

2. Determine the purposes for which the equipment is to be used.

Two different instructors may start with totally different needs and arrive at the same equipment. Again, two instructors may have the same problem and arrive at two different systems. In both cases they replaced a mechanical determination of equipment with a rational use of equipment. I recently visited a corrections institution at which the discussion of hardware arose, and I soon determined that the varieties of hardware that were needed were less than the director assumed them to be. It was evident that flexibility was the keystone of his operation and that a fixed investment in too much of the same thing might prove to be costly when much of the equipment might lay idle.

3. Determine the expandability of the equipment.

Many times the level of students is low at the beginning of a program, but as the students gain in knowledge, the instructional hardware needs to be adapted to higher level lessons. If the student population is transient and the number of students at one level is constant, then a heavy investment in non-expandable equipment is justified. If the level of student is to change, and mirror a more or less permanent change, then the equipment must be subject to modification and expansion.

4. Instructional hardware should produce a positive effect on the students.

If the hardware is such that the lessons become rote and repetitious, a negative effect may be produced over the long run. Often, systems of instructional hardware may be exciting for a short period, but prove to be a bore when repeated each day. This can also happen with software.

5. The hardware must be honest and above-board.

Some hardware utilizes many lights (red, blue, green) and they goad the student on, not by producing satisfaction in learning, but by interesting him in watching the show. It is imperative that the instructional hardware be honest,

it must allow for student recognition of false tries, and also for student variation. Above all, it should lead the student to question, ponder, and reason. It cannot just lead him through a maze.

It should be understood that instructional hardware is not just the machine, but what is in the machine also. It is at this point that corrections begins to get a sharper focus. Adapting the instructional hardware to modular units of instruction bodes great benefits for corrections, for the inmate population is often subject to variance in time and in instructional needs. Men coming to the institution are not all cut from the same mold. Modular units adapted to the audio and phono tapes can be developed that "zero in" on specific skills in reading, arithmetic. These can be linked to a computer terminal for easy access, and, with the proper diagnosis and prescription, the student can progress along to a definite terminal objective. This then reduces the need for haphazard determination of the student's deficiencies and how to remedy them. Access dialing is one of the brightest things that has come to the field of corrections; small groups of students may be plugged into a larger system, and problems of large classes, movement of men, and other security considerations can be overcome while still providing an amplitude of instructional modules.

The MT/ST, or Magnetic Tape Selectric Typewriter, is still another device that can be used well, for it will reproduce individual lessons for the student prepared in advance by the instructor, or even commercially produced. It seems likely that an enterprising person who realizes that special lessons are needed for corrections will soon be offering them for distribution to other institutions.

A second device that promises much for corrections is the video-tape recorder. Coupled with closed circuit television, lessons can be "piped in" to sections of the institution, or even cells, for inmates to use. Specific lessons can be developed around subjects of importance to the inmates, and recorded in a studio. These can then be stored or sent to other institutions for their use.

Simple descriptions of all the various instructional hardware items are unnecessary here: first, because they are very numerous and often brand items derived from the same concept, and secondly, because they are rapidly changing in nature. A list of these is available in the U.S.O.E. Adult Education Publication, Instructional Technology.

When discussing the advantages and disadvantages of instructional hardware, it is critical to keep in mind the overlying fact that the hardware must produce more than cognitive gain. Each of the pieces of hardware is purported to produce some gain in learning. At the same time, it is conditioning the inmate to certain other behaviors. The chief conditioning is to produce some attitudes toward learning. Instructional hardware that leads to the student seeing only simple cause and effect, or rote type, learning, is conditioning the inmate to consider education to be simplistic and nonproductive. It produces a desire to get the "right answers" and little else. One should be cautioned against hardward that does not produce some feedback.

Lack of feedback is often seen as a benefit by some. Unfortunately, it is often true that instructors, and far too many supervisors of corrections education, want to "keep the natives quiet." They search for the narcotic-like hardware that does not allow for student reaction. An audio-tape might be better than a reading machine, if the audio-tape allowed for the student to react in some way. Some of the teaching machines do not allow for any feedback and the student plods on his way to the end.

Also, there is a responsibility to turn off the hardware when the students show that there is an obvious feedback that they wish to give. This then allows for independent thinking and synthesis of learning. It is valid to say that the ability to react to instruction is essential if we are to assist inmates in preparing for life on the "outside" where independent thinking and rational behavior are at a premium.

Advantages of Instructional Hardware

The advantages of instructional hardware are many, and can be listed as to their ability to free the instructor of repetitious tasks, individualizing instruction for the student, allowing for reinforcement and reteaching, economy in terms of manpower, and controlled teaching input. Since almost all of instructional hardware has programming as a major component, the principles of programmed instruction can be readily adapted. This may not apply for the simpler devices such as the audio-tape, but it surely applies to those hardware items that contain software as an integral component. The better hardware allows for the principle of stimulus-reaction, or behavior and reinforcement. This then guides the student to learn through a series of controlled stimuli, giving the appropriate response and being reinforced by knowing that he has achieved the learning task. This should produce learning, and most developers of instructional hardware will tell you that they are striving for this. For corrections, this has great advantages, for it allows the inmate to see his success and have it reinforced immediately. In a prison environment, successful behavior is often hard to elicit due to the restrictive conditions. The importance of a pattern of success has been recognized since the days when penologists advocated work programs.

Additional advantages come in the flexibility that is allowed the instructor in developing an independence of behavior. The more inmates can be induced to use independent behavior, the more effective will programs of rehabilitation have, for self-management is essential to corrections. This flexibility can also be shown in the development of programs of gradually increasing difficulty, and since the input can be controlled, there is little chance that the reinforcement will be lost in its effect. To put it another way; the inmate soon begins to get greater reinforcement from success as he moves through the program and realizes that the tasks are more difficult. This can produce an affective growth in self-concepts. A two-sided paradigm might be developed in which it can be seen that the student reacts to the material and the material acts upon the student. It would appear as follows:

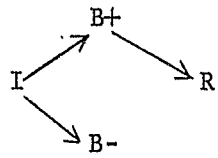

Input (learning task and learning material)

Behavior (student response or attempt at response)

Reinforcement (knowledge of successful response)

The beauty of this is that the reinforcement can be repeated several times and several ways, and good use of hardware would allow for response to the material in various settings. This is a principle well-established in arithmetic instruction, in which the arithmetic fact is presented in several ways to the student for better learning, and also for the purpose of achieving a measure of variety.

It is important to remember that the reinforcement that hardware produces is related to the learning task. It is not a pat on the back, gold star, or piece of candy. It is knowledge of successful accomplishment of the task. Inmates who have little success in academic and cognitive work can arrive at the point at which they can measure themselves in terms of the successful responses, and they can be conditioned to look for successful patterns of response. This is essential to both volitional conditioning (wanting to choose responses that work), and affective conditioning (feeling self-growth through success).

Numerous authorities in the field, and several demonstration projects of the Adult Education Branch, have shown that positive reinforcement of self-concept arrives from utilizing good instructional hardware. One project was at the Benjamin Franklin School in Philadelphia, as reported in Adult Learning (Johnson, Vinson, and Dozier, 1967). Yet, it has been found that negative results can occur when using instructional hardware if the reinforcement is not appropriate to the response. The student feels frustrated and cannot talk back to the machine. He gets a feeling of "do not fold, spindle, or mutilate." There are dangers in trying to decide whether or not the reinforcement for the response is negative, for some apparently negative reinfrocement has been shown to give a great benefit in learning. This falls into the pattern of "you have it wrong ... what will you do to get it right." I feel strongly that positive reinforcement is not akin to "babying" students. Inmates won't stand for that. The apparent difficulty is not in the fact that the material is stated negatively. It is in whether or not the material is slanted to a negative feeling on the part of the student. Much of the effect of the reinforcement that accompanies instructional hardware can be predicted with great reliability. These effects can be predicted through the utilization of a knowledge of the reward system that is operant for the student.

There is apparent controversy over what a reward is. One corrections officer said that the people in corrections "pretty well know all the carrots." His greatest carrot was early release and good behavior time. But

are those good educational carrots? Very little of the literature on corrections takes up the problem of "educational carrots." The motivation to continue learning may decrease rapidly as soon as the early release time is given or the "goodies" are given. Little attention is paid to the fact that one of the carrots may be the sense of increased learnings and competence. It seems likely that instructional hardware can, through the affective response of the learner, provide some rewards not usually found in a correctional setting. There is the immediate and positive recognition of growth. Also, it is important to recognize that time away from the hardware allows for a relief and provides a breather so that the student can return to the hardware with a new feeling of searching for growth.

Another advantage in using instructional hardware is to provide different patterns of responses. The old question and answer, or lecture method, can be varied immensely through the use of instructional hardware. This allows for different patterns of responses and thus different patterns of learning. Often the student loses his whole thought while waiting for the pre-determined opportunity to respond. It is much more advantageous if he can respond immediately and get his reward "reinforcement" immediately. Still another positive effect is that the reinforcement comes after the response. He knows that he has done the proper learning task and is told so. He is not told he can do it, or that he has the ability. He must do it, and then be told he has done it well.

Through the use of such devices as the slide-tape presentation, it is possible to recycle material and then withhold the reinforcement for that material until later. For example, in order to do a two-step arithmetic problem, the student may have to do step one (material previously reinforced) in order to do step two. When he has completed step two, he knows that step one has been done correctly. This can be done skillfully, to the point that the student is accomplishing a number of previous tasks in order to complete the task at hand. This builds attitudes toward perseverance and attention. Good instructional hardware has a "reinforcement schedule" built into it so that the student slowly moves toward longer and more attention-demanding tasks. This is self-evident as a need in corrections. The hope is that the student will be able to move away from the strict reinforcement-type materials and "go it" on his own. This then allows for return to certain other types of instructional methodologies. Parenthetically, one use of some instructional hardware is to prepare the student for independent learning, the lecture method, and other less reinforcing types of instructional methodologies. It is not wise to continue a reinforcement schedule to the point at which the student is continually doing the tasks simply for their own sake. He should be removed from the material when he gets to that point. But for many inmates, the development of patterns of patience and perseverance are essential. Instructional hardware with a reinforcement schedule can do this.

Some have criticized instructional hardware in that it puts the student through many steps to reach the terminal objectives. This is not as important as what happens to him as he goes through the many steps. The Premack Principle says that some of the steps can be unimportant and basically dull, if the reinforcements that arise from the steps are kept

interesting, and the terminal reward is important enough to the student. Thus, we can "hook" the student into doing the small steps. We all know that the job or preparing a meal is reduced by the enjoyment in eating it. The same applies if the reinforcement is appreciated by the student; he will move through the many small steps, not nearly so bored as it may appear. There is still the joy in knowing that the uninteresting ones were done correctly and great affective conditioning arises there. Over and over again, students will complete a task and comment on the fact that the material was not that interesting but that they felt good in doing it and mastering it.

One more statement relative to advantages of utilizing instructional hardware related to the secondary benefits arising from the autonomous feeling of self-direction so needed by adult basic education students and inmates. The continuous reinforcement of the feedback produces the effect of independence. This then leads to an appreciation of independent activity. Much of the improvement in student learning arises out of the fact that students soon begin to desire to be independent of the instructor and face-to-face input instruction. When this happens, the student is well on his way to finding self-reinforcement. As stated earlier, the student may then be ready for other instructional methodologies, for at that point he becomes self-motivated. This is not to say that the instructional devices themselves are such that the student will develop this independence, but more that the independence is being developed because the devices produce behavior that is self-gratifying. It is dismaying to see people turned loose in learning laboratories and not provided with the stimulus for interaction and self-growth. The sharing of knowledge gained through the use of instructional hardware is essential for maturation and increased uses of learned tasks.

Disadvantages of Instructional Hardware

The greatest danger that can occur is that unwanted learnings or behaviors can be reinforced. Some students will work through the material just to get finished and get another mark in a book. This will soon develop into a reinforced pattern of doing to "please" and not doing to learn. This can be further intensified by the assignment of grades at the conclusion of the learning task, so that the grades become additional reinforcers for "grade seeking" behavior. This has been observed in a number of Learning Centers, with students who fall into discussing how soon they will get their "credits" or their "passing grades." This is unfortunate, and often the nature of instructional hardware will intensify this kind of attitudinal set. It is wise to temper this with reminders that the grade is not the end result, though there must be some measure by which to evaluate. I stand strongly on the belief that self-evaluation of performance tasks will reduce this danger considerably.

Still another difficulty is that instructional hardware is often programmed so that the student cannot skip to another lesson that is important and skip material he already knows. This creates boredom and often reduces motivation. Often students ask, "Why should I study this when I already know it?" It is true that review and repetition may be useful, but often that is not the reason for the material being given as

a task. It simply is that it is in the program. The ability to move forward or backward is essential in choosing good instructional hardware. This does not contradict the Premack Principle because here there is no direct link between the repeated material and the terminal objective.

To look at it another way, the Terrace technique can be used to transfer this learning situation to another set of materials and in that way the student can be presented with a repetition of the same learning skill with new content. This is highly important in working with inmates who have a wide diversity of backgrounds and who would easily fall into the pattern of feeling that this material is "old hat."

I can recall from a visitation to a learning center recently that one of the greatest criticism of the students was that they were repeating materials that they had had in regular school. When some manner by which they could develop their own lessons was suggested, great objection was raised by the staff, which immediately brought up the questions of having time and money available to make these individual prescriptions. If one does not have the staff to adequately make these individual prescriptions and diagnoses, one should hold back on installing expensive hardware.

Many persons have found that the problem with some instructional hardware is that it does not give a strong enough reinforcement to certain students. There are those who need to have the reinforcement stated and given in such a manner that there is no mistake about what they are doing and what they have accomplished. Once a student told me that she liked working with a series of mechanical programmed readers, but she was not sure that she was still learning to read. Her reinforcement was not strong enough. This has a reverse effect, in that the reinforcement can be given and the student is still not learning. This is called a "ghost effect." In other words, when the student receives a reinforcement in the material and still has not learned the material, he will soon begin to divert his attention away from learning and try to develop some system to gain the reward without conscious cognitive effort. He looks for a hidden key to the material. As early as 1965, in the Los Angeles City Schools, Central City Occupational Training Center, this problem was uncovered and discussed.

It is of vital importance to recognize that the way in which the reinforcements are varied when using instructional technology is the key to successful learning gains by students. To attempt to let the material do "itself" is to leave open the door to teaching a number of other contingencies that were not intended in the original determination of learning needs.

Expected Outcomes

What are the expected outcomes of utilizing instructional hardware? They are easily categorized as follows. The student obviously increases in the amount of relating to the systematic methodology of the content of the lessons. Students are not allowed to stray away from a sequential and controlled curriculum. With a constant set of reinforcements, the

student is pushed toward ever greater task complexity. Soon the student is working on tasks that are considerably more difficult. The result is greater student progress toward higher levels of problem-solving. It builds content mastery in a short span of time.

Another outcome is greater goal-directedness on the part of the student. Conte and Grimes, in Media and the Culturally Different Learner, point out that one of the typical characteristics of the disadvantaged student is that he has short attention span. Instructional hardware can track the student into staying on a target and reaching it. This is partially done through the use of the feedback mechanism built into the hardware, the ability to quickly respond to inappropriate answers, and to reinforce correct answers.

Additional support for the effect of instructional hardware in determining successful student-teacher interaction is given by Rex Reynolds in Instructional Technology, in which he points out that the instructor is relieved of the task of constantly providing the feedback, whereas the non-threatening feedback of the machine is often accepted more readily by the student. The student begins to accept his own motivation for studying when he receives the feedback in such a non-threatening manner. It is important to realize that much negative effect is caused by having the instructor provide this corrective type of feedback. For the student, it takes the "monkey off his back." This leads to a discussion of the kinds of benefits and outcomes that arise from the student's obtaining new stimulation and input from the hardware itself.

One of the greatest outcomes of instructional hardware is the ability of the devices to provide materials and inputs that are not available to the ordinary teacher. It has long been known that media can provide knowledges and materials far beyond the teach of the classroom instructor. This then leads to a richness that is unimaginable. The hardware can contain so much that the instructor does not have at hand, or that cannot be put into textbooks. The student can begin a process of selection and of establishing priorities of learning needs and tasks. With the richness of content in instructional hardware, the student can for the first time begin to select what is important to him. He is not pushed or pulled into learning. He can begin to select what he needs to learn. The import of this is clear to all who think of it. The student begins to become a partner in curriculum selection, teaching methodology, and feedback correction.

Still another outcome that arises from the use of instructional hardware is the ability of the student to begin to generalize from several points of view. The presentation of one viewpoint and one method through the usual textbooks is balanced with the multi-input approach. With the skillful selection of such materials by the instructor, the student can begin to draw from several source materials as needed. This is a teaching maxim known for a long time, but until recently was so expensive that few could use it. The development of the college library was in response to the need for several sources to compare and weigh for the education of a learned man. The use of various pieces of hardware with varying methods and varying content helps us reach a larger mass of students with variable instructional methodology. This does not mean that the ultimate in instructional methodology is reached through using hardware. There is still

a long way to go in developing methods of creating high cognitive gain and more affective responses on the part of the students. Yet, the path is well-marked in that the outcomes are beginning to become sharply defined.

At the conclusion of this section, it seems wise to review some of the most advantageous forms of instructional hardware usable for the adult basic education student.

Magnetic tape-loops
Reel and cassette tapes, often equipped with headphones
Motion picture projectors
Cassette players synchronized with slide projectors
Auto-tutorial visual and sound presentations
Video-tape players
CATV and closed circuit television
Slide and visu-cast photo projectors
Selfpacing reading machines
Filmed pace-reading slide projectors
Off-the-air televisions
Multi-sensory computer terminals

Software for Adult Basic Education

A discussion of software goes far beyond the discussion of hardware; software has been used over a longer period of time in education and has more varied uses than hardware. It does reduce the mechanical and deterministic bent of some hardware. It can be varied and more readily adapted to the student with a different learning problem than envisioned by the programmer of the hardware. It also reduces the brunt of negative reinforcement in that the instructor can mediate the feedback. It has some definite advantages with certain types of students and in certain learning situations. An accurate description of instructional software could begin with noting that it is instructional material, usually on paper, that is often consummable and does not need a mechanical assistance in order to provide instruction. Secondarily, it can provide feedback to the student in different settings and modes from that of the instructional input. There is no need to list all of the software, for the list is long, but there can be value in pointing out some of the salient points found in most software.

One effective use of software is its ability to be stopped at any time. Software lends itself to taking "time out." This "time out" is effective in producing a desire to move on. Software can be stopped during the middle of a lesson, for a day, or for a week, and the student can return to it with renewed zest, or after synthesizing learnings to a point where further progress is needed. The "time out" factor in software is seldom appreciated, but is sorely needed. Software has still another factor built into it--the ability to be used as a vehicle for wise exploration and discovery. Often the software can be a jumping-off place in which the individuality of the student is challenged and he can "do his own thing."

It is well to analyze software in the following manner. Each piece of software was designed by the author to reinforce some particular learning task. When used over a long period of time, software can produce some effects that are important to the learner, particularly a reduction in the desire to escape learning or in defiance to learning tasks. This is done through the use of varied inputs and varied methods that offer several routes to a task completion. The instructor can always return to a lesson that presented difficulty and not abviate the use of software. It becomes a creative way of approaching learning. The "time out" can be used to reinforce other learnings, or types of learning, and a return to the software can be done when the student is ready for it. This does not mean that hardware does not have this capability in some measure, but it is evident that the machinery, or controlled input, of hardware often makes this possibility less viable than in software.

Software can also be used without the feedback loop. It can be used to simply input instructional materials to the student. It can be used without tests, correct answers, or the need to do a task before moving on to another. This use of software is often overlooked by those who wish to use it as a task-centered instructional medium. Much of software and its uses has been based on "correct answers." Education has customarily tried to place software in that context. The questions at the end of the chapter were a boon to the "lazy" instructor. It produced a series of generations of students who dreaded the end of the chapter and the inevitable questions. Recently, there have been attempts made to produce software that does not have task-centered problems attached, and that instead attempt to provide an instructional system built on releasing creativity. The whole purpose of some of the current software is to produce within the student a desire for self-generated learning tasks.

Permissiveness is not the name of the game described here. This is not a brief for letting the student wander through the materials "willy-nilly." Chapman and Schultz (Teaching Adults to Read) have pointed out that in the Mott Series the instructor should be well aware that letting the students wander through the material will produce low motivation. They emphasize that the choosing of the lessons to perform is a task to be done jointly by student and instructor. The authors rightly point out that this becomes a factor in human relations and that the software is highly useful in building humanistic values. Even programmed instruction, as shown by John Peters, can be a factor in developing greater humanistic values. Software now used in adult basic education may make an enormous difference in the coming years, for more and more of it is beamed toward the creative tasks of learning. It may be well to think of hardware and software not as mutually exclusive, but as two compatible items used in instruction.

Some of the advantages and disadvantages of software can be seen by observing how they are to be used. It is evident that the human factor of the instructor is important in developing good usage for software. Yet, the reinforcement principle still applies to software. The reinforcement is different. The reinforcement is not as direct, nor often as precise, but it can be more readily adapted to the individual student. It can be complex in that it stretches through a number of learning tasks, or it can be immediate for one small micro-input of instruction. It can be used for teaching a number of items that evade the hardware, such as self-control,

self-management, cooperation, and ethical behavior. It lends itself to a wide diversity of uses.

Software, as hardware, lends itself to "contingency management" in that the student can develop projects, additional research, and group tasks from the software. Study skills can easily be taught through software, and software can often be used as a prelude to hardware. The development of a "set" for hardware is often done through the use of software. In this initial stage, the length of the lesson and its difficulty can be adjusted to the level of the student so that students can use software lessons that develop the attitudes of self-management needed for using instructional technology. Many instructors of adult basic education attest to this.

Software can also reduce the need for teacher-direction in students. The reasoning may not be obvious at first, but consider the following. Thousands of adult basic education students are using poor or unproductive patterns of response in problem solving. Software provides a series of alternate paths to problem solving. The instructor allows the students to see what they have done, find out what the incorrect paths are, eliminate them, substitute other paths and provide feedback when the new paths are attempted. This kind of procedure can produce new learnings and learning strategies on the part of the student. It is simple; to change the present patterns of the student, the student must see new patterns for learning. Often software can produce a number of alternatives that allow the student to choose one that may help him to learn better.

This is not a system built on good intentions or self-chastisement. This is a desire to provide a systematic way in which the student can participate in the determination of the materials and learning paths to be followed. Software should never be used to provide the student with a pattern of self-resentment. It is not a correct answer that we are looking for, rather a correct path for learning. Good instructional software can produce the effect of self-confidence and creativity. It is essential to judge this factor in selection of materials. There is a difference between software designed to correct and punish, and software designed to lead to stronger self-management.

Often software is criticized because it produces too many different patterns for students to follow, and the instructor is left with a highly diversified group of students. This is a correct assessment. It is compounded by the problem that some authors assume that the development of attitudes is more important than learning task performance, thus causing "preachy" and ineffective types of software. The important fact of software is that it must move the student to the completion of an instructional task, and often much of it does not do this. It may be well to venture to say that most software used up to now has had little emphasis upon changing behavior or behavioral tasks, but has tried to provide changed attitudes, so that the instructor has had to provide the behavioral tasks to be done. This is a failure which hardware tried to remedy. Another difficulty of software is that it often has difficulty in following a path that leads to changed behavior. By its nature, it often confuses changed behavior with attempts to change behavior. Changing the kinds of lessons

to those that satisfy a need will produce changes in behavior that eventually produce changed attitudes.

Mager, in Preparing Instructional Objectives highlights just one problem when he points out that the instructional software must combine two things: diversity of paths and clear-cut behavioral goals. Of the two, it is evident that Mager places the behavioral goals as the most important priority for our attention. It is student behavior that we are affecting in using software. The concommitant benefit is that the student has different ways of reaching the goal. It is important to realize that affective behavior is greatly influenced by software, even more so than in hardware. Students like the feeling of choosing, and of having the instructor respond to their learning tasks. The inter-action with other students can also bring many positive affective responses. However, it is important that we realize that one of the greatest pitfalls in using software is that the reinforcement or response of the instructor must follow the student doing something. Giving of reward cannot preceed the student giving the correct response.

It is evident that one of the greatest drawbacks of instructional software is found in the lack of student behavioral response that often accompanies it. The student is allowed to be a plastic respondent to material and makes little decision as to its use. Poorly constructed or poorly utilized software can produce weak responses, guilt over incorrect attempts, and ineffective problem-solving behavior. All of these can be corrected by using excellent materials and well-trained instructors who are aware of the possibilities inherent in them.

In summary, it is wise to consider that software is primarily designed to provide instruction, and then changes attitudes as a result of task completion. It is not designed to produce quiet students or passive learners. It has to define the learning task clearly and suggest ways of doing it. When this is done, the student can then follow the materials to successful task completion.

Utilization of Hardware and Software

Learning Resources Center

The learning laboratory is a center for utilizing both hardware and software in which the student may engage in such activities as will lead him to an individual instructional goal. It is not necessary to stock a laboratory with only hardware. That smacks of "gadgetry." It is important that the learning goals be individualized and that different students follow different learning tracks to reach their goals.

Inherent in the learning laboratory is the thought that the material or programs are built on the principles of learning reinforcement. This differs from the regular classroom in that the method used is closely controlled in order to provide continuous reinforcement to the student. It is supposed that in the laboratory the student will learn more economically. He will move to the terminal goal more quickly and with a greater success

rate. Experience shows that students often increase their learnings at a much faster rate than in the normal "non-contingency" classroom. Also inherent in the laboratory is a minimum of unnatural reinforcements such as bonuses, grades, and instructor approval. The reinforcement comes in doing the work well.

B. F. Skinner can be thanked for providing the conceptualization of the learning laboratory in that he developed the basis for programmed instruction. He simply developed a method in which the rewards for instruction could be immediate by having the feedback supplied in response to completion of micro-tasks. The reinforcement is planned in advance and the student moves to the goal quickly. Anyone who has seen a learning laboratory will notice immediately that the students are performing a number of small tasks, yet there is a macro-objective in learning a large number of complicated tasks. There is no need to cite studies that show the rapid learning that takes place with the micro-inputs. It is of importance in corrections to remember that the inmates need immediate reinforcement and often large increases in the learning of skills and facts. Another aspect of the laboratory is the ability of one skilled instructor to handle more than a normal classload. Once the student is able to work on his own, the instructor is freed from lecturing or dividing the class into smaller segments, and thus neglecting many of the students.

Chapman and Schultz, in The Mott Basic Language Skills Program, Teachers Manual, state four principles that guided them to convert much of their earlier material to a programmed format. Students learn at their own rate; there is constant re-testing of skills; students can begin work at their own level; and there is positive reinforcement given immediately. These four principles lead to an increase in student motivation and the accompanying affective changes. It surely does not repeat the pattern of earlier years which are often painful to the student. It reduces anxiety as well as fear. Both the agressiveness of some students, and the fear of others, is diminished. It also reduces the tendency toward development of a syndrome of receiving unearned rewards. The students do not get rewarded for being obsequious or fawning. This is a factor that leads to much spurious learning in that the students often work for the reward of approval and not achievement. Rather, they are rewarded for producing, and therefore attitudes toward learning are greatly improved. Learning laboratories are places of achievement. The instructor is also motivated as he sees the students moving closer and more quickly toward their goals. The result is higher satisfaction on the part of the instructor. There are not many studies on the benefits that accrue to inmates in this area, but there is belief that transfer does apply and that what is working for most adults will work for inmates. It is a pity that few directors of corrections education view the learning laboratory as a viable instructional tool. It is even more tragic that guards and other minor correctional personnel view the learning laboratory as disruptive of their routine, and as a place in which inmates are "coddled."

Bloom (Taxonomy of Educational Objectives) speaks of a hierarchy of learning tasks. The learning laboratory should contain progressively more difficult lessons for the students to master. As they move through

the lessons they learn more complex skills and perform more complex tasks. This can be done through the principles employed in the laboratory: immediate feedback, small steps, active responses by the learner, and self-pacing. To these should be added knowledge of the terminal objectives.

There can be one danger in the learning laboratory and that danger is that the student may become addicted to the reinforcement in the programs. At some point the student should be "weaned" away from the reinforcements of the program and should learn to provide his own reinforcements. This is where "self-management" comes into play. The determination of the learning path and the lessons to be performed is then the responsibility of the learner. He then can begin to determine that his arithmetic is leading him to a goal, for he picks the goal, and with assistance, picks the path to get there. He is then a self-learner.

Materials and Media Centers

A materials and media center is another portion of the instructional technology utilized in successful adult basic education instruction. It provides a large source of audio-visual and supplemental materials usable for both "ontrack" learning and for student exploratory learnings. It is chiefly stocked with materials that accompany or supplement those used in the basic programs, whether they are in software or hardware form. Care should be used in developing a materials and media center to insure that the films, tapes, slides, photos, books, and displays are consonant with the materials used in the learning laboratory. Otherwise, there is a great waste of money. The purpose of the materials center is to provide further enrichment or teaching materials for the programmed materials. It is wise therefore to build the center slowly. The materials should also be housed in a manner that will allow for easy access and use. For replenishment and additions, some system should be used to check to see which materials are used most often. Materials that get a low frequency of use should be weeded-out. There should be a way in which the student can have access to the materials and not need permission from the instructor. The air of a sacrosanct library should be avoided at all costs.

The materials and media center can reduce the need students feel to hoard learning materials. If they are available for use at all times, they are available for more students and there is less "down time" in using them. Within a short period of time, students can be taught to use the materials when needed, then return them and leave them available for other students. A minimum of checking is then required. The learning center and the media center should avoid giving "brownie" points for utilizing media and materials. The purpose of the media center is not to get a high number of check-outs, but to provide a large supply of materials for instructor and student use.

Klein (Perception, Motives, and Personality) speaks of the need for experiencing as a factor in behavior modification. This is an essential part of the media center, for it should provide manipulative and simulation materials as well as visual materials. A good media center

should be stocked with exhibits, motor projects, games, films, and tape cartridges. It should provide as much realistic material as possible. This helps "lock-in" the learning that has taken place. The student can then experience his learnings in some situation as near to real life as possible. There are schools that utilize the media center as a place where the students can get a multi-media reinforcement for learning. These centers provide materials in visual, auditory, and often mechanical response form, tied together for review, exploration, or just plain "fun." If we consider that learning takes place in an environment, then we must consider how rich that environment is. The media center provides a means of enriching the environment. This is extremely important in corrections where the environment is meager and barren.

The media center is not to be used as an individualistic learning environment. To show a film in isolation is to provide weak stimulus for learning. To show the film as a part of exhibits, pictures, tapes, and manual projects is to provide a rich stimulus for learning.

It is essential to understand that the media center is to provide a new environment for learning. It is not a place to divert the student's attention from the primary tasks he is learning. Often there is great misunderstanding about the media center as a fancy collection of materials that somehow will attract the student's attention. Its purpose actually is to reinforce what he is learning in his primary learning track.

Media centers are not just places to be turned on or off at will. They are not places where the student can go from eleven o'clock till noon. The environment is constantly impinging on the student, and to provide an enrichment for one hour is to provide a spotty and often defeating enrichment. There are instances in which corrections officers have complained over the ability of the students to use the media center at times other than during recreation periods. Yet, it may be at precisely those times that the need for enrichment is greatest. How many persons have found that a great deal of learning is lost when they could not get to the library on a Sunday?

The media center often provides the only opportunity to vary the environment as the student is learning. It is a law of learning that the student must be able to respond to his learning needs as they arise. They cannot be deferred to another time.

Media centers have other difficulties in that they are often tied to rewards not related to learning. The "good boys" can use the media center. This negates the purposes of the center. The reward for using the center is learning, not approbation. There have been instances where students in a rebellious mood have destroyed much school property, but have left the media center intact. This is attestation to the type of attitude the students had toward the media center.

There have been numerous critics of media centers who point out that they consume much time and money. This may be a true criticism. Yet there has been little in the way of proving that non-enriched learnings are any cheaper in the end. The media center may assist the student to

reach his terminal goal more quickly and the savings in instructor costs, social costs, and student time have never been calculated. Also it may be that the instructors are threatened that the media center is replacing their expertise. Often this is true. It should be noted that the instructor is forced to adapt new patterns of teaching when a large and resourceful media center is nearby. The introduction of a media center with closed circuit TV can force an instructor to make drastic changes from the usual lecture/paper-and-pencil tests methods.

A final observation on media centers is due. It seems likely that there will be periods of confusion, disrupted schedules, loss of direction, and so on, when using such centers, but they justify themselves when they assist students in learning faster and more efficiently. It provides a means of reinforcing self-management behavior. This in itself is worth its costs and trouble. The student who can see learning as a multi-faceted thing is more valuable than one who has mastered a few learning tasks. In corrections there is an attempt to provide a new viewpoint to inmate education, and the media center is an excellent vehicle for introducing the new viewpoint. It provides a means for the student to test his learnings against a background of the outside world.

Other Uses of Hardware and Software

There are other uses of hardware and software in adult basic education. First, they are not miracle workders and they still require that the instructor does a good job of teaching. Yet, there are some uses not often associated with education that lend themselves to the utilization of these materials. One of them is to combine visual cues with motor tasks so that the student can learn a precise series of motor operations. This has particular usages in vocational and technical education.

There are diagrammed slide sequences that can be used in teaching trade education in which the student follows each slide as a step in the production of a garment. These slide presentations, when coupled with sound, allow the student to have an accurate path for his motor work in learning the steps of a complex process.

Again, slides and films can provide descriptions of materials to be used, and when coupled with the overhead projector, can allow the students to see fine and delicate operations on the screen. This allows a group of students to see what would have to be repeated singularly for each one otherwise.

Still another use of instructional software can be the comparison of incorrect attempts with correct attempts. Care must be exercised so that the student doesn't think that the incorrect attempt is correct, but this kind of comparison teaching has shown its merits.

Hardware can be modified, either within the hardware itself, or with software, to allow for student affective feedback. The development of group discussions, sessions, and role-play can follow from this feedback. The key to this is the desire to change the total behavior of the student. When these instructional tools are combined with discussion and

role-play, significant inputs for behavioral change can arise.

Summary

Instructional software and hardware is revolutionizing adult education. The model of the twenty immigrants sitting at the foot of the "nice American lady" who is teaching them to speak English through rote instruction is fast disappearing. The introduction of micro-input has brought instruction to the point where it can be measured. It now contains curriculum accountability. The question then can be raised: Is the curriculum sound, or is it not? If it is not, this can easily be spotted. When combined with a reinforcement schedule supplied by the author, the instructor knows what he is teaching. The guesswork is gone.

This paper is an attempt to go beyond the usual description of hardware and software used in adult education to discussing some of the philosophy behind the utilization of programmed materials especially as they relate to the basic theories of B. F. Skinner. To those who wish to have simple lists of materials and machines, this paper may not do justice, but for those who wish to examine the ever-growing field of these materials, the opportunity can be afforded by obtaining catalogs of recent materials or contacting distributors of such equipment.

What kinds of materials are best used with inmates? The answer to this is not clear, for inmates range from those who have few skills to those who have many, but it appears that a cardinal point in determining what technology to use with inmates is the rule of producing as much educational gain as possible in a short period of time. This would lead to software and instructional programs that are geared to short-term results. One example would be modular components.

What kinds of materials are available? The materials can easily be classified into four categories:

Hardware with software as an integral component.
Hardware with variable software.
Software utilizing the programmed principle.
Non-programmed software.

What are the advantages of using different types of materials? The advantages and disadvantages are most easily measured against program goals. Hardware controls inputs and reinforcements, but can be expensive. Software is flexible in inputs and reinforcements, but requires skilled instructors.

What are some of the expected outcomes of using instructional technology? There is an evident reduction in the need for instructor guidance and an increase in self-determined activity. There is a reduction in guilt and fear of punishment. There is a controlled curriculum input that is measurable.

What kinds of media are available for correctional institutions? Correctional institutions have limited usages of many materials and media. The nature of the corrections environment prevents widespread use of field trips, simulations, etc. Yet there is an unlimited ability to put some material to creative uses within a restricted setting.

References

Bloom, B. Taxonomy of educational objectives. New York: David McKay, 1956.

Chapman, B., & Schultz, L. Teaching adults to read. Chicago: Allied Education Council, 1965.

Chapman, B., & Schultz, L. Mott basic language skills program: Teacher's edition. Galien, Michigan: Allied Education Council, 1970.

Conte, J., & Grimes, G. Media and the culturally different learner. Washington: National Education Association, 1969.

Johnson, R., Vinson, W., & Dozier, R. Hardware for adult basic education. Adult Learning, 1967.

Klein, G. Perception, motives, and personality. New York: Knopf, 1970.

Lindskoog, L. Operation relevance. Los Angeles, University of California Extension, 1970.

Lobb, M. Practical aspects of team teaching. Palo Alto: Fearon Publishers, 1964.

Mager, R. Preparing instructional objectives. Palo Alto: Fearon Publishers, 1962.

Popham, J. Developing instructional products. Los Angeles: Southwest Research Laboratory, 1968.

Reynolds, R. Instructional technology. Adult Learning, 1969, 37-39.

HARDWARE AND SOFTWARE FOR ADULT BASIC EDUCATION

Boris Frank
University of Wisconsin Television Center
Madison, Wisconsin

Your use of instructional materials will depend to a great extent upon your own particular situation: the materials you have available or are apt to obtain, the setting in which you work, operational and physical changes you can realistically hope to implement, the budget you have to work with, the capacity and potential of your participants, your own strengths or weaknesses as a teacher and organizer of learning.

Rather than presenting a long and windy treatise on "Types and Uses of Instructional Materials," this paper will offer a few general statements concerning the role of instructional materials in the learning process and some basic reference and source points for further exploring the acquisition and use of such materials in adult basic education programs.

We can discuss specific uses of a variety of hardware and software systems; the relative advantages and disadvantages of helical scan TV, audio cassette units, bound text materials, learning centers, programmed institutions. As is true in almost any learning situation, use of audiovisual and multimedia materials and methods are only as good as the person using them.

> Poor systems used by highly skilled teacher can be effective and stimulating.
>
> Superior systems used by a poor teacher can be deadly dull and useless.
>
> Good systems used by good teachers can be some of the most effective methods of teaching we have yet devised.

Superior audiovisuals and materials cannot "save" the poorly prepared teacher. But a combination of a well prepared teacher using good materials can truly motivate and "turn on" most learners.

Do not expect materials, audiovisuals, media to solve all problems of learning. Look upon these instruments as tools in the process, not as cure-alls. A sound knowledge of these resources and an awareness of how they can be used effectively within the general learning framework can assist teachers in achieving their goal of providing a highly personal and individual format for each and every learner.

When dealing with the educationally disadvantaged there can be no hard and fast rules established as to which media, material, or system is "best." But there is one pitfall to be carefully avoided--the "all or nothing" approach. Too often we have a tendency to put all our eggs in one basket and to rely upon one technique or system to serve all participants. If we are truly going to satisfy individual differences and

provide for all types of learners, we must offer as many different systems of learning to our people as possible. One person may learn best without exposure to any technological system, while others might learn best from TV or teaching machines or computers.

It is desirable to have as many different learning systems available to participants as possible within the parameters of space and budget. Our library might include teaching machines, computer assisted units, helical scan TV record and playback systems, audio and video cassettes, overhead projectors, audio tape recorders, slide projectors, books and magazines, film strips, charts, posters, maps, newspapers, catalogs, phonographs, comic books, art materials; the greater the variety of systems and materials available, the better the chance of satisfying individual needs.

On the whole, our audience is interested in highly practical information. Abstract intellectualization and long-range planning with no specific target in mind can quickly turn our people off. They want solutions; immediately useful and practical information; answers.

When basic skill instruction can be placed in the context of living skill situations, in the context of coping with one's life and surroundings, the better the chance of continued involvement and advancement. Our people want to see how information acquired can be used. Learning to read or write or figure as ends in themselves seldom turn our people on. Media and audiovisuals and well-prepared practical printing materials related to living and coping needs can greatly assist the adult basic education teacher in reaching and turning on our participants.

It is important to remember that hardware is only as good as the software that accompanies it, and that hardware is of little value if it sits in the corner unused. Select hardware on the basis of the learning needs of your people, the quality of the software available, and the extent to which you can use the system. It is better to have simple, easily utilized systems that are truly <u>used</u> than to have complex and sophisticated systems that sit around unused.

In many cases hardware is already available to you. The first step in developing any useful materials system is to determine what is already inhouse. Resist the urge to buy something new before you are sure you are using to best advantage what is already available.

The learning setting should be as varied as the materials it houses. A good learning center is not just a formal area with tables, chairs, shelves, viewing rooms, and carrels. It should, whenever possible, include informal areas: a kitchen, a living room setting, very comfortable study areas with upholstered furniture groupings, small rooms with easy chairs and study areas for individual work. It can also include mobil units that can be taken <u>to</u> the learner. We need not always ask the learner to come to us.

It is often useful to develop a content organization system of specific use and value to your own program. The University of Wisconsin

RFD project developed a "Content Center" curriculum organization system centered around life coping skills. Reading, writing, and computational skill materials were cataloged as they related to these specific living skill areas:

I. CONTENT CENTER: ABOUT ME

Module A: UNDERSTANDING MYSELF
- Unit 1: Who Am I: Accepting a View of Myself
- Unit 2: What Am I: A Positive View of Myself
- Unit 3: What Affects Me: Heredity and Environment
- Unit 4: What I Believe: Developing Character

Module B: MY WELL BEING
- Unit 1: My Physical Health
- Unit 2: My Mental Health
- Unit 3: My Education: An Adequate Person is Well-Informed
- Unit 4: My Leisure and Recreation
- Unit 5: Maturing and Growing Old
  Growing Old Gracefully

Module C: BECOMING A BETTER PERSON
- Unit 1: I Am Changing: Thinking, Feeling, Acting
- Unit 2: I Am A Person: Dignity, Integrity, Self-Direction
- Unit 3: Motivation: The Will to Win
- Unit 4: I Can Make Things Change

II. CONTENT CENTER: ABOUT ME AND OTHERS

Module A: MY FAMILY
- Unit 1: Home Is For Family Living
- Unit 2: Understanding Feelings of Family Members
- Unit 3: Getting Along with One's Marriage Partner
- Unit 4: Guiding Children and Building Character
- Unit 5: Family Good Times

Module B: COMMUNICATING WITH OTHERS
- Unit 1: My Friends
- Unit 2: My Neighbors
- Unit 3: The Art of Listening
- Unit 4: Respecting Other People's Race, Ideas and Beliefs

Module C: WORKING WITH OTHER PEOPLE
- Unit 1: People I Deal With for Services
- Unit 2: People I Work With on the Job
- Unit 3: People I Work For

III. CONTENT CENTER: ABOUT ME AND MY MONEY
PART I: ABOUT MY HOME

Module A: MANAGING MY FAMILY'S MONEY
- Unit 1: My Income
- Unit 2: Family Spending Plan

Unit 3: Using My Credit Wisely
Unit 4: Family Security Plan

Module B: THE JOY OF GOOD FOOD
Unit 1: Introduction to the Joy of Good Food
Unit 2: A Choice: Casserole or Stew
Unit 3: Supper on the Table on Time
Unit 4: Wise Planning + Smart Shopping = Good Meals

Module C: BUYING GUIDES
Unit 1: How to Buy Wisely To Stretch Your Dollar
Unit 2: Smart Food Shopping
Unit 3: How to Buy Clothing,
Unit 4: How to Buy Furniture and Appliances
Unit 5: Satisfaction Guaranteed

Module D: HEALTH, SAFETY AND SANITATION
Unit 1: Emergency First Aid
Unit 2: Non-Emergency First Aid
Unit 3: Accident Prevention
Unit 4: Recognizing Symptoms of Illness
Unit 5: Home Sanitation

Module E: MAKING A HOUSE A HOME
Unit 1: A Home Is a Man's Castle
Unit 2: Taking Care of the Inside
Unit 3: How To Do It Yourself Repairs
Unit 4: The Home Workshop
Unit 5: Taking Care of the Outside

PART 2: ABOUT MY WORK

Module A: HOW TO LOOK FOR A JOB
Unit 1: Sources of Jobs (Laubach)
Unit 2: Letters and Forms (Laubach)
Unit 2A: It's Best To Telephone About a Job
Unit 3: Personal Interview (Laubach)
Unit 4: Important Job Facts (Laubach)
Unit 5: Summary for Job Hunters (Laubach)

Module B: HOW TO APPLY FOR THAT JOB
Unit 1: The Work Experience Record
Unit 2: How To Fill Out Application Forms (Dobbs-Dorman)
Unit 3: (Open, published materials)
Unit 4: (Open, published materials)
Unit 5: (Open, published materials)

Module C: HOW TO GET THE MOST FROM MY JOB
Unit 1: My Responsibilities to the Job
Unit 2: My Boss's Responsibilities to Me
Unit 3: Getting Ahead on the Job
Unit 4: Laws Protecting Workers
Unit 5: Self-Employment

IV. CONTENT CENTER: ME AND MY COMMUNITY

Module A: ME AND THE PEOPLE
- Unit 1: We The People, By The People, For The People
- Unit 2: The Declaration of Independence
- Unit 3: Our Constitution and What It Means (McGraw Hill)
- Unit 4: How We Organize to Do Business in America: The American Private Enterprise System (NEA)
- Unit 5: United States History (Follett)

Module B: MY GOVERNMENT: HOW IT WORKS
- Unit 1: In My Community (township, village, city, county)
- Unit 2: In My State
- Unit 3: In My Country
- Unit 4: In The World - United Nations, Other Nations

Module C: CITIZENSHIP IS TAKING PART IN DECISIONS
- Unit 1: My Rights as a Citizen - Civil, Human, Moral
- Unit 2: My Responsibilities As a Citizen
- Unit 3: Being An Informed Citizen (Facts, Fiction, Opinion, Propaganda)
- Unit 4: As I Live and Breathe: Population! Pollution! Conservation!

Module D: WHERE TO GO, WHO TO SEE, WHAT TO DO
- Unit 1: Welfare and Employment Services
- Unit 2: Medical and Health Services
- Unit 3: Legal Aid Services
- Unit 4: Leisure and Recreational Services

Of great concern to adult basic education practitioners is whether materials selected are adult in format and approach. While there are still some isolated cases of adults learning from and utilizing child-oriented materials--even Dick and Jane is still used by some to teach reading to adults--there are sufficient adult format materials on the market now to enable us to discard most child-oriented materials. We should, in selecting materials, constantly ask "Is this material adult-oriented?" "Is it appropriate for my particular group?" "Is it relevant to their needs?"

The following list of criteria for the evaluation of adult basic education materials is useful.

Criteria for the Evaluation and Selection of Adult Basic Education Materials

1. Is the subject matter of the material oriented to adult interests and experience?

2. Is the physical format, illustrations, typography, other graphic design of the material appropriate for an adult user?

3. Does the material deal with real life situations: homemaking, earning a living, sensible consumption, personal and social problems?

4. Does the material convey sound and worthwhile information which will encourage the user to try this method of information seeking again?

5. Does the material seek to produce positive effects, such as building a stronger self-image, increasing understanding, broadening horizons and stimulating continued learning and self-improvement?

6. Is the content of the material relevant to the reality perceptions, life style and social situation of the undereducated adult?

7. If the material has a strong urban or ethnic identification, can it be accepted by or adapted to a rural audience?

8. Is the concept development and general style of presentation of the material simple, clear, and direct?

9. How does the material fit into the developmental skills levels of an adult basic education program? Beginning? Intermediate? Advanced?

10. Is the reading performance level of the material specified or easily measured? Must a readability formula be applied?

11. Does the material allow entry by the learner at different levels of performance and sequential development from that point?

12. Can the material be related to other materials used in your program and effectively integrated with such other materials?

13. Does the material contain self-pacing devices that recognizes individual differences and allow for satisfaction from achievement by the learner?

14. Can the material be utilized to meet the particular needs of special students in special situations? Does it lend itself to individualized application?

15. Does the material include learning aids, such as teacher and student guides, workbooks and worksheets, and graphic matter which actually facilitate the process? Are these practical, properly maneuverable, and adapted to independent use at home?

16. What is the best application of the material? As a teaching resource, instructional content, supplementary reading, or a combination of these?

17. Can the material be incorporated intact into your program or does it require adaptation? How much and what kind of modification?

18. Is this material readily available at a reasonable cost?

Some of the most effective teaching materials are often those we think of least. One of the most successful "texts" in adult basic education is the Sears or Montgomery Ward catalog. Here, embodied in one book, are exercises in filling out forms, math, reading, comprehension, vocabulary, identification of information. And one of the best features of the book is that it is free and is constantly updated.

Other good materials are available from non-adult basic education sources. Co-op Extension offers many fine pamphlets and bulletins. Most rural weekly newspapers are written at a very low vocabulary and comprehension level, usually 4-6 grade equivalency. Comic books can help some people learn to read. Photoplay, Life, Sport, and other magazines can be useful. Almost any medium that will hold the interest of the participant and get the point across is fair game. Of course, you will find that different materials will appeal to different people.

Above all, offer a broad variety of materials. Have many books around, just available for the taking. Magazines, newspapers, materials of all kinds should be available for use at any time, on the participants' home ground. Encourage your people to take materials with them for use outside the learning center.

A good filing and retrieval system is essential if a broad variety of materials is used. The system should be simple and efficient.

The following card system was used by the RFD project. The information on the card was standard for all materials while the color of the card was varied depending on the content area: blue for money management, red for reading materials, green for community service information.

RFD RESOURCE BANK INDEX CONTENT MODULE OR UNIT:

TITLE_____ _____
AUTHOR_____ _____
PUBLISHER_____ DATE_____ SOURCE_____
SINGLE UNIT_____ TEXT SERIES_____ PAGES___ ___ ___ ___ COST_____
READING LEVEL: 0-3_____ 4-6_____ 7-8_____
FRAME OF REFERENCE: RURAL_____ URBAN_____ ETHNIC_____
TEACHER RESOURCE_____ INSTRUCTIONAL MATERIAL_____
SUPPLEMENTARY READING _____
ADAPTABILITY _____
ILLUSTRATION: B&W _____ COLOR _____
QUALITY: EXC _____ VG _____ G _____ FAIR _____ POOR _____

MEDIA PRESENTATION

SOFTWARE:

Hardbound _____ Soft cover _____
Prog. Mat. _____ Semi-Prog. _____
Pam. _____ Graphs _____ Charts _____
Periodical _____ Other _____

HARDWARE:

Slides _____ Film Strips _____
Film Loops 8mm _____ Film16mm ___
Audio Tapes _____ Video Tapes ___
Phono Record _____ Other _____

The National Multi-Media Materials Center for Adult Basic Education has been established at Montclair State College, New Jersey with a media center located at Federal City College, Washington, D. C. This center can be of value in locating and assessing the value of materials in a broad variety of fields. It is important to note that the center lists bibliographies as well as basic source materials.

Based on a card retrieval system and abstract service, a set of locator cards and abstracts of adult basic education materials is on file in the office of each State Director of Adult Education, in the office of each Adult Education Regional Program Officer, and at some selected universities. You can also write directly to the center to obtain catalogs and service information. Some sample reference cards follow.

001184
TITLE: RACHEL'S CHILD: FILMSTRIP
SERIES
TITLE: SOCIAL LIVING SKILLS: PARENT EDUCATION AND FAMILY LIFE
AUTHOR:
SOURCE: NEA Publications, Washington, D. C.
DATE: 1969C PAGES: PRICE:
CURRICULAR INFORMATION:
*Health Education, *ABE, *Family Life, *Filmstrip, Level II-III (Grades 5-8)
ADDITIONAL CURRICULAR INFORMATION:

READING LEVEL: not applicable
FORMAT: 35 mm filmstrip 53 frames
COMMENT: This unit is one of a set of 2 workbook masters, 1 filmstrip, 1 flipchart, 1 tape, and 4 teacher's manuals designed as a complete curriculum kit for use with undereducated adults. This film follows a young pregnant woman just beginning to learn about baby health care. It must be used in conjunction with the teacher's script and sound tapes. (BGS)

001101
SERIES
TITLE: SPECIFIC SKILL SERIES: GETTING THE MAIN IDEA
AUTHOR: Boning, Richard A.
SOURCE: Barnell Loft, Ltd., Long Island, New York
DATE: 1968, 1970 C
CURRICULAR INFORMATION:
*English, *ABE, *Reading Skills, *Reading Comprehension, Workbook, Level I-II (Grades 1-6)
ADDITIONAL CURRICULAR INFORMATION:

Social Studies, science
READING LEVEL: 1-6th grade (Fry)
FORMAT: Workbook - soft cover
COMMENT: This set of six workbooks comprises the Getting the Main Idea program of the Specific Skills Series, a structured reading program which may be used to achieve rapid results with children or adults, or as supplementary drill on an individualized basis. Getting the Main Idea concentrates on the ability to recognize the central thought in a short narrative. The six workbooks are lettered A through F, each representing its corresponding level from one to six. Books are designed for students who can handle difficult work on their particular level. Exercises involve choosing the correct main idea after reading each paragraph. Paragraphs usually offer surprising or interesting tidbits about nature, wildlife, history. Answer sheets (purchased separately) make workbooks non-consumable. There are introductions to the teacher. (CJ)

001170
TITLE: BIBLIOGRAPHY MATERIALS FOR THE ADULT ADMINISTRATOR AND TEACHER
AUTHOR:
SOURCE: National University Extension Association, Silver Spring, MD.
DATE: 1968 PAGES: 52 PRICE: $1.20
CURRICULAR INFORMATION:
*Counseling, *ABE, *Counselor Training, *Bibliography, Level I-III (Grades 1-8)
*Bibliography, *ABE, *Counseling, *Counselor Training, *Teaching Guide, Level I-III (Grades 1-8)
*ABE Program Development, *ABE, *Guidelines, *Bibliography, Level I-III (Grades 1-8)
*Bibliography, *ABE, *ABE Program Development, *Guidelines, *Teaching Guide, Level I-III (Grades 1-8)
*Bibliography, *ABE, *English as a Second Language, *Literacy Education, *Teaching Guide, Level I-III (Grades 1-8)
*English as a Second Language, *ABE, *Literacy Education, *Bibliography, Level I-III (Grades 1-8)
ADDITIONAL CURRICULAR INFORMATION:

READING LEVEL: 12th grade (Fry)
FORMAT: Teaching Guide - soft cover
COMMENT: This selected bibliography has been prepared for use by administrators and teachers of ABE programs. There are six major subject

headings: 1) programmed instruction; 2) educational technology; 3) admininstration; 4) teaching methods and materials; 5) understanding the ABE student and 6) Counseling and testing. (JR)

The following annotated and consolidated listing of adult basic education bibliographies may be useful as you consider acquisition of a general adult basic education library and materials center.

The bibliographies listed have often been compiled from the same sources. They contain overlapping categories and duplicate entries. However, they are included because they may offer access to needed materials not recorded elsewhere by reason of their special purpose, arrangement or date of publication. This is not a comprehensive compilation, it includes only selected bibliographies of adult basic education materials.

Adult Education Council of Greater Chicago. AN INVESTIGATION OF THE MATERIALS AND METHODS FOR THE INTRODUCTORY STATE OF ADULT LITERACY EDUCATION, by Anne Hayes, Nancy Lighthall and Dan Lupton. Springfield, Illnois, Office of Supt. of Public Instruction, 1964. 59 p. Mimeo.

An intensive analysis of adult literacy materials under three major rubrics: Professional Literature, Basal Materials, Supplementary Materials. Entries are carefully annotated to indicate application to the introductory level of reading achievement, defined as 0-2 grades. A summary discussion of the problems of selection and evaluation of literacy training materials may be useful.

American Library Association. Adult Services Division. Committee on Reading Improvement for Adults. BOOKS FOR ADULTS BEGINNING TO READ, REVISED 1967. (Reprint from THE BOOKLIST AND SUBSCRIPTION BOOKS BULLETIN, Dec. 1, 1967) Chicago, A.L.A. Adult Services Division, 1967. 12 p. Pa.

List is organized into two reading levels, elementary and intermediate, with entries arranged alphabetically by author. Not an extensive list, but it has been analyzed and annotated carefully to indicate subject matter and style appropriate to adult readers at these levels of proficiency. CAUTION: List includes children's materials considered suitable for adult new readers, but these items are identified.

Berdrow, John, comp. BIBLIOGRAPHY: CURRICULUM MATERIALS FOR ADULT BASIC EDUCATION. Springfield, Illinois, Office of Supt. of Public Instruction, Dept. of Adult Education, n.d. (Circular Series A-185) 37 p. Pa.

A curriculum materials guide intended mainly for ABE teachers and administrators. Arranged by the typical ABE program subject areas, first by materials for instructional use and then by materials for supplementary use. Films, filmstrips and other useful hardware are also listed.

Boston Public Library. Committee on Easy-To-Read Materials. MATERIALS FOR THE BEGINNING ADULT READER. Boston, Public Library, 1968. 16 p. Mimeo.

Arranged into three sections by reading grade levels: 1-3, 4-6, and 7-8. Each entry specifies the exact readability level and briefly summarizes content and its applicability. List identifies materials prepared for children.

Canada. Department of Regional Economic Expansion Experimental Projects Branch. ANNOTATED BIBLIOGRAPHY: ADULT BASIC EDUCATION. Preliminary draft copy. Ottawa, Canada. Dept. of Regional Economic Expansion. 1969

A recent, comprehensive compilation of ABE materials, organized into two major sections by the purpose of the item: 1) Instructional Materials and 2) Survey of the Literature of ABE Processes. The instructional materials section is arranged by its function: sequential systems, reading skill development, general knowledge and interest reading, phonics, math. The literature section includes any publication relating to ABE, including periodical articles, reference books and research reports, and ranges over the wide spectrum of ABE problems. Appendices contain author indexes to each section and lists of publishers and of the journals in the field.

Cleveland Public Library. Adult Education Dept. Reading Centers Project. SUGGESTED BOOKS FOR BEGINNING ADULT READERS. Cleveland, Public Library, 1967. 29 p. Pa.

Annotated book list based on experience in the library's Reading Center Project and tested with beginning adult readers. Entries are arranged by title in four separate sections which represent the four separate steps of graded reading difficulty used at the centers. These steps are fully described in the preface.

Dramond, Harriet and Phyllis Duturn. GUIDELINES FOR THE PREPARATION OF WRITTEN MATERIALS FOR THE UNDEREDUCATED ADULT. Upper Montclair, N. J. Adult Education Resource and Service Center, 1967.

This item might have value for content specialists.

Fader, Daniel N. "Reading List of 1000 Paperback Books", pp. 148-175 in: HOOKED ON BOOKS: PROGRAM AND PROOF by Daniel N. Fader and Elton B. NcNeil. New York, Berkely Pub. Corp., 1968.

This is an author, title, publisher, price listing only of books found to be most popular and actually read by adolescents in a special program to encourage reading by semi-literates in the schools. The list can be useful in selecting titles for adult new readers because it was based on criteria of ease of reading and comprehension plus high interest among undereducated readers. Items that are not appropriate for a mature reader can be excluded by the information contained in titles.

Ford, David and Eunice Nicholson, comp. ADULT BASIC READING INSTRUCTION IN THE UNITED STATES. Newark, Del., International Reading Assn., 1967. 28 p. Pa. (I.R.A. Annotated Bibliography No.15)

Selective list of materials to build a reading program and to guide the reading teacher. Arranged by sections on comprehensive reading programs, supplementary reading practice materials, materials for teaching the foreign-born, professional training publications. Brief annotations of the subject content and methods.

Harris, Larry A. Comp. GUIDE TO MATERIALS ON READING INSTRUCTION. Bloomington, Ind., ERIC, Clearinghouse on Retrieval of Information and Evaluation on Reading (CRIER), Univ. of Indiana, Sept. 1968. 248 p. Pa.

This compilation is arranged by publishers (78) in alphabetical order. Each entry is by title and classified by type of reading instruction program (basal/non-basal), setting of material, type of material (reader, workbook, etc.) type of binding, Grade Level (Readability and Interest) Skills Development.

Lander, Muriel Comp. BIBLIOGRAPHY OF FREE AND INEXPENSIVE MATERIALS FOR USE IN ADULT EDUCATION CLASSES. Vol. 1, Union, N.J., Adult Education Resource Center, NewarkState College, n.d. 8 p. Mimeo.

Intended for comprehensive use in Adult Basic Education, Skills, Training, High School Equivalency and GED classes and includes material at all levels of performance. Entries are arranged by title under 8 subject headings. Very brief annotations and no definite stipulation of the readability level of each item. Heavy on pamphlets and government publications.

Los Angeles Public Library. REPORT II OF LIBRARY SERVICES AND CONSTRUCTION ACT PROJECT NO. 2842, July 1 - Dec. 31, 1966. Los Angeles, Public Library, 1966. 45 p. Mimeo.

The appendices of this report included a booklist of controlled vocabulary - high interest titles for adult and YA readers. Annotated in part. Heavy concentration of urban, ethnic and Spanish language items.

Lundeen, Alma, Comp. "Books for Adult Beginners; Self-Improvement Through Reading" ILLINOIS LIBRARIES, Sept. 1964, pp. 565-597 (photocopy.)

A selected list of supplementary reading intended to enhance or stimulate a regular reading habit in the adult new reader. Selections are briefly annotated in recontent and are individually rated at three levels or reading performance, Beginning, Intermediate and Advanced. However, entries are arranged under a series of broad subject or form categories which could be useful for content development purposes, e.g. Biography, Communication, Conservation, Economics, Health & Hygiene, Hobbies, Home Arts, etc.

Michigan. Department of Education. State Library. ADULT BASIC EDUCATION PROGRAM. HIGH INTEREST-LOW DIFFICULTY COLLECTION: A SELECTED LIST ARRANGED BY READING LEVEL. Lansing, Mich. Michigan State Library, n.d. 31 p. 45 p. Mimeo.

Two separate booklists in nearprint form. The first list is arranged by reading performance levels 1-8 inclusive. Each entry is annotated carefully to show its utility. The second and longer list is arranged by subject headings ranging from Adventure and Exploration through Cars, History, to Weather. No annotation of these titles except that the reading level is stipulated in each case.

Milwaukee Public Library. ABOUT PEOPLE IN ABE BOOKS. Milwaukee, public Library 1967. 36 p. Mimeo.

Famous persons and celebrities listed by their popular names in alphabetical order with references to information about them in books held in the library's ABE collection. Paging and author/title of the source publication are cited in each entry. The Milwaukee Public Library periodically issues a computer printout of its titles acquired for the Adult New Reader collection.

National Book Committee, New York, N.Y. GUIDLINES FOR VISTAS TO USE WITH VISTA BOOK KITS. Washington, D.C. Volunteer information Service, VISTA - U.S. Office of Economic Opportunity. 80 p. Pa.

A short manual of instructions of VISTA volunteers in the application and use of packaged book kits prepared for their varied clientele. The manual contains simple author/title listings for each of the separate Adult and Young Adult book kits, with special units oriented to American Indians, mental institutions, migrant laborers, rural and urban residents, plus an annotated list of additional titles which might have relevance to any one of these units. This item might be very useful in developing a training unit for reader guidance efforts of teacher aides.

National University Extension Association, Washington, C.C. BIBLIOGRAPHY -MATERIALS FOR THE ADULT BASIC EDUCATION STUDENT. Prepared by U.S. Office of Education, Adult Education Branch, Washington, D.C. N.U.E.A. June 1968. 129 p. Pa.

This list is strictly confined to adult oriented materials. It is arranged under six inclusive categories: Communications Skills, Computation Skills, Social Studies, World of Work, Individual & Family Development, Materials for Spanish Speaking. The first three skills sections are divided into programmed and combination programmed-non-programmed media. A useful summary of programmed instruction techniques and a set of succintly stated criteria for selection of ABE materials are included. The annotations stress application to ABE instructional needs.

National University Extension Assn. Washington, D.C. EDUCATIONAL TECHNOLOGY: PREPARATION AND USE IN ADULT BASIC EDUCATION PROGRAMS. Prepared for the U.S. Office of Education, Adult Education Branch, Washington D.C. NUEA June, 1967. 86 p. Pa.

Manual to guide administrators and instructors on the application of new hardware in ABE learning situations. Covers general discussion of role and training technicians in use of the technologies and then gives a detailed description of several media: Video and Audio Tape Recording, Programmed Learning, Teaching Machines, CAI, etc., 8mm movie film and film loops, overhead projectors, telelectures, etc. A comprehensive bibliography covering various phases of educational technology concludes the presentation.

New Jersey. Library Association. Human Relations Committee. LIBRARY SERVICE TO THE DISADVANTAGED. A SELECTED LIST, REVISED, 1969. New Jersey State Library, Public and School Library Service Bureau, 185 W. State Street, Trenton, N.J. 08625.

Lists books, pamphlets and periodical articles on this subject. The list is divided into sections: 1) What has been done, 2) What can and needs to be done, 3) What can be used, and 4) To gain understanding. Annotated to indicate the relevance and utility of the material to this problem.

New York Public Library. EASY READING FOR ADULTS: THREE HUNDRED TITLES HELPFUL TO LIVING IN AMERICA. Chosen by a workshop group of the library. New York Public Library, 1954. 62 p. Pa.

An older compilation prepared before the surge of publication in this field which probably contains many citations that are out of print or obsolete. It is arranged into eight major sections by a loose classification of readability level of the materials: Picture Books, Readers, Very Easy, Easy, Fairly Easy, Standard, Fairly Difficult, Information & Reference. Entries are by author or title in each classification, but a subject index is added to the Reader (type) index. Must be used very sparingly but can be useful as a source of carefully evaluated titles for supplementary reading purposes which may not be found on more recent standard bibliographies.

Ohio State Library. BOOKS/JOBS PROJECT. Core List. Jan. 1968. BOOKS/JOBS PROJECT. Supplementary List. Mar. 1968 Columbus, Ohio State Library, 1968. 13 p. Mimeo.

A broad, but selective list of printed and audiovisual materials in the fields of human relations, vocational information and basic education. Arranged by author under those headings. Annotations briefly describe content and usually designate the proper reading level and also distinguishes background items suitable for professional training.

Otto, Wayne and David Ford. MATERIALS FOR TEACHING ADULTS TO READ. Working Paper No. 2. Madison, Wis., University of Wisconsin-Research and Development Center for Learning and Re-education, Feb. 1966. 46 p. Pa.

Results of an evaluation survey of ABE materials intended to develop reading skills. Materials included are those which cover the initial stages of acquiring reading skill, the "mechanics" and the "decoding" tasks needed to establish an ability to attack materials independently. A set of criteria to apply to the evaluation process and a

detailed checklist of 50 analytical and descriptive items is applied to the four lists of materials included: Basic Reading Programs for Adults, Supplementary Skill Builders, Supplementary Reading Easy Materials, U.S. Govt. Printing Office Publications, Materials for Foreign Born.

Philadelphia. The Free Library. READER DEVELOPMENT PROGRAM. BIBLIOGRAPHY. Philadelphia, The Free Library, Dec. 1968.

A series of listings of the library's holdings of materials at the 8th grade reading level or below. Each list is devoted to a separate subject category: Community, Citizenship, Family Life, Jobs, Reading, Writing and Arithmetic (combined and individual lists,) Science, The World and Its Peoples (3 subordinate lists). Entries are arranged by title on each list along with short content notes and citation of readability level.

Smith, Edwin H. and Weldon G. Bradtmueiller, comp. A SELECTED ANNOTATED BIBLIOGRAPHY OF INSTRUCTIONAL LITERACY MATERIALS FOR ADULT BASIC EDUCATION. Tallahassee, Fla. Florida State Univ., Department of Education, Div. of VTA Education, May 1966.

This is a carefully annotated selection of ABE rpinted materials with emphasis on their instructional values. Arranged into three stages of ABE development: Introductory (1-3), Elementary (4-6), Intermediate (7-9). Two sets of criteria, general and specific, are presented along with the selections which assist the user of the lists.

Smith, Jeannette, Comp. BOOKS FOR NEW READERS: A BIBLIOGRAPHY. Syracuse, N.Y. New Readers Press 1964. 64 p. Pa.

The Laubach Literacy System list presented in four parts: Two adult reading courses based on the Laubach streamlined English series, a New Readers Library of supplementary reading suggestions, and a list of ABE publishers. The New Readers Library lists are arranged under 14 broad subject headings and are briefly annotated for content. Reading level is indicated in each entry and these materials are concentrated on the 1-4 levels.

Stoffle, Carla J. "LIBRARY SERVICE TO THE DISADVANTAGED: A COMPREHENSIVE ANNOTATED BIBLIOGRAPHY. Parts I and II." LIBRARY JOURNAL, 94: 141-152 Jan. 15, 1969: 94: 507-514, Feb. 1, 1969.

Bibliography covers 1964-1968 period. Available in reprint from R. R. Bowker. Pub. Co. on order.

Summers, Edward G. Comp. MATERIALS FOR ADULT BASIC EDUCATION: AN ANNOTATED BIBLIOGRAPHY. Bloomington, Ind., Univ. of Indiana, School of Education, 1967. 23 p. Mimeo. (Occasional Papers in Reading, Vol. 1, March 1967)

This bibliography is divided into four sections of instructional materials, graded at three levels of performance: beginning, intermediate and advanced, plus a section on professional literature references. Entries in the instructional materials sections lean heavily on the text series and do not incorporate much supplementary reading.

Utah, State Board of Education. Utah Adult Education Services. ADULT BASIC EDUCATION INSTRUCTIONAL MATERIALS GUIDE. 1969.

A comprehensive guide to a broad variety of ABE materials including audiovisual instructional units.

Watt Lois B. and Sidney B. Murphy. Comp. ABE, A BIBLIOGRAPHY FROM THE EDUCATIONAL MATERIALS CENTER. U.S. Dept. of HEW, Office of Education, Bur. of Research, Washington, D.C. USGPO/Sup. Docs, 14 p. Pa.

An abbreviated, selective bibliography largely devoted to the instructional texts series in combined and eight single curriculum areas. Minimal annotation but full bibliographic description. Single curricular fields are: English Language and Literature, Guidance Services, Health, Industrial Arts and Vocational Education, Mathematics, Religion, Science and Social Studies.

Wyoming, Department of Education. Division of Vocational-Technical Education, Adult Basic Education. ADULT BASIC EDUCATION: A BIBLIOGRAPHY OF MATERIALS. Reproduction of a bibliography prepared by Kalamazoo, Michigan Public Library Adult Reading Center, Marion Spencer, ed. Cheyenne, Wyoming Dept. of Education, n.d. 164 p. Pa.

An annotated bibliography of curriculum materials, machines, equipment and professional guidance literature designed for ABE instructors and students. Arranged into 38 sections by curricular subject area, media form, program function. An author, title and publisher index to contents is provided. Useful because of the comprehensive range of its coverage.

There are a number of other publications you should be familiar with as you develop multimedia programs:

Audio Visual Instruction: Media and Methods by Brown,
Lewis, and Harcleroad
McGraw Hill
New York, New York

Audio Visual Marketplace
Bowker Publications
P. O. Box 2017
Ann Arbor, Michigan 48106

Audio Visual Methods in Teaching by Edgar Dale
Dryden Press
New York, New York

Developing Multi Media Libraries by Warren B. Hicks
R. R. Bowker Co.
New York, New York

Educational Broadcasting Magazine
825 S. Barrington Avenue
Los Angeles, California 90049

Educational and Industrial Television Magazine
607 Main Street
Ridgefield, Connecticut 06877

Educational/Instructional Broadcasting Magazine
647 N. Sepulveda Boulevard
Los Angeles, California 90049

Educational Television Magazine
607 Main Street
Ridgefield, Connecticut 06877

Standards for School Media Program
National Education Association
Washington, D. C.

Teaching and Media: A Systematic Approach by Gerlach and Ely
Prentice Hall
Englewood Cliffs, New Jersey

The Teacher and Overhead Projection by Morton J. Schultz
Prentice Hall
Englewood Cliffs, New Jersey

The National Audio Visual Association
Evanston, Illinois
They publish an extensive Audio Visual directory.

It would be an almost impossible task to list here all of the materials that might be used by an adult basic education program. The list could almost be endless. The important point is to know the source of good bibliographies and to know where to get adequate information about materials that may be of value. I have found the following bibliography to be of special value in selecting materials:

The RFD bibliography. Available from RFD, P. O. Box 5421, Madison, Wisconsin.

Annotated with limited judgments made regarding usefulness of materials in relation to RFD project specifically. While these judgments may not be especially relevant to your own situation, there may be some value in reading them and using them once you have some idea of their broad context.

HARDWARE AND SOFTWARE FOR ADULT BASIC EDUCATION

Stephen S. Udvari
The University of Wisconsin
Madison, Wisconsin

Toward an Instructional Technology

Instructional technology is failing to make any significant impact on the nation's schools concludes the Commission on Instructional Technology (CIT, 1970) in its massive federally sponsored study entitled To Improve Learning. The report, however, adds a cautionary note, "examining the impact of modern technology on instruction in 1969 is like examining the impact of the automobile on American life in 1908 when the Model T first came on the market (p. 19)." Therefore, although the United States is experiencing a knowledge explosion and technological revolution, we, nevertheless, are merely at the brink of an instructional technology for education. To assume that everyone understands the nature and use of instructional technology in an educational program because they have operated a slide projector or turned on a TV set is pure folly.

What then is instructional technology? What do administrators and teachers need to know about it? Why is it important that they understand new communication theories? What is the so-called "knowledge explosion?" Where is the communication revolution taking place? These are only few of the questions that those who would regard themselves as serious facilitators of learning need to come to grips with.

Since instructional technology is a complex process, and since it requires judicious use in its application to instruction, a definition is in order. Instructional technology is the "hardware" and "software" that distinguishes machine devices from program content and what today largely supplements the two primary media of instruction: the teacher and the textbook. The Commission (CIT, 1970) in its report offers the two following definitions:

1. "...the media born of the communications revolution which can be used for instructional purposes alongside the teacher, textbook, and blackboard..."

2. "...a systematic way of designing, carrying out, and evaluating the total process of learning and teaching in terms of specific objectives, based on research in human learning and communication, and employing a combination of human and nonhuman resources to bring about more effective instruction (p. 19)."

Institutional administrators, professional educators, and program practitioners need to become acutely aware of the enormous potential of

instructional technology, for the application of technology to education is the single most important advance since the invention of the book. They need to gain a better knowledge of the basic principles of communication relative to "who, say what, in which channel (media), to whom, and with what effect (Lasswell, 1968, p. 27)." These elements cannot be adopted or adapted as single entities, rather they must be integrated into the curriculum.

> The curriculum design process is a system of relationships between the learner (his needs, his individual differences, his self-directed purposes), the teacher (his personality, his methods, his strategies), and the total supporting resources of institutions (goals, objectives, concepts, content, print media, machine devices, technology systems, environment, administrative and supportive services and so forth) (Udvari, 1969, p. 157).

Since the center of the learning process is the learner himself, the value of any adjunctive technology must be measured by the extent to which it enhances the learning act. The new communication revolution has produced a great diversity of electronic media that has become commonplace. People are being bombarded by sights and sounds of such things as television, movies, slides, radios, phonographs, recorders, stereos, and telephones more of their waking hours than by any other activity including school. Consequently, the way students learn outside of school differs radically from the way they learn inside school. This includes adults as well. There are those purists who deny that any effective learning takes place outside the formal educational environment. The television program "Sesame Street" is a good example of effective learning outside the classroom. Preliminary tests in Maine, New York, and Tennessee have shown that poor students were making achievement gains two and one-half times as great as a control group of youngsters who did not watch the program. Researchers and educators need to become more sensitive to the new mass media techniques and their overpowering effect on the learner and the learning act.

The old didactic approach of a textbook in one hand and a piece of chalk in the other are archaic tools for instruction. New innovations in educational technology are moving toward a diagnostic-prescriptive approach in a learning laboratory setting. This approach is no longer the illusion of science-fiction writers. This approach is a reality now. The methods presently available include both software and hardware materials. In terms of software there are a host of packaged materials such as individualized reading prescriptions, adult basal series, multiple level kits, programmed workbooks, and correlated worktests. While on the otherhand, hardware materials are available in terms of still picture projection devices, motion picture projection devices, audio-tape and recording devices, videotape and recording devices, reading and tachistoscopic devices, teaching machines, computer assisted instruction and learning laboratory systems. The only problem that remains is how to use this new technology effectively.

Hardware Used in Teaching Educationally Disadvantaged

Title III of the National Defense Education Act provided federal funds to help elementary and secondary schools take advantage of advanced communication technology. Knowledge about how to apply the new technology was gravely lacking. Administrators and teachers attempted simply to lash the new technology to old curricula as one would lash a pack to a horse's back. The burden was too great for the untrained practitioners and overworked curriculum to handle the strain. As a consequence, fragile, unreliable, untested, and expensive devices that had inadequate software backup materials often were set off in closets, only to be trotted out for an occasional PTA show-and-tell. This is also what has happened with many audio-visual materials employed in adult basic education. Many local directors in an effort to prevent year-end funds from reverting to the funding source splurge large sums on audio-visual devices that go unused.

The reasons most often given for failure of instructional technology to produce results are three-fold: 1) indifference or apathy on the part of administrators, 2) poor and inadequate programs for the machines, and 3) lack of teacher knowledge about processes and skill in using the equipment.

Still Picture Projection Devices

Still picture projection devices include 35mm slides, filmstrips, opaque graphics, and overhead transparency. Some models of slide and filmstrip projectors are designed with phonograph or audiotape recorder attachments. For the most part these pieces of equipment are relatively inexpensive. Even the most amateurish slide presentation, when developed by learners, can be a satisfying experience. The most inexpensive "instamatic" cameras can be used to create slides.

With the Kodak Ektagraphic Visualmaker kit the teacher or students can photocopy pictures, drawings, maps, charts and so forth and make excellent slide presentations. With a little more work, the teacher can create his own auto-tutorial model. All that in addition to the 35mm slide projector is the cassette recorder with the audio program. The unit costs about one hundred dollars and includes a camera, two copy stands and reflectors.

Most teachers are reluctant to become involved in preparing visuals such as charts, graphs, maps, diagrams, and so forth. However, most office copiers can be used to produce overhead transparencies from almost any print matter in a few seconds. The cost is quite reasonable, about twenty-five cents each. Colored diazos and special marking pens can be used to make more elaborate transparencies and add interest. An overhead projector has greater flexibility than a chalkboard since it permits the user to face his audience. The advantages of transparencies are they can be reused and reviewed at any time eliminating time and effort in redoing the whole lesson.

A recent development in filmstrip projectors shows promise for individualized study use at a low cost. The unit incorporates a synchronized filmstrip viewer and a cassette recorder. The unit is about four inches wide, nine inches high and twelve inches wide. Such a unit can be carried as easily as a textbook. Programs for such a unit can be created easily by the teacher or media specialist.

The National Information Center of Educational Media (1968) has developed an index of 35mm educational filmstrips with a fairly inclusive listing on a wide range of subjects.

Motion Picture Projection Devices

Motion picture devices are by design and function more expensive than still projected equipment. The two most commonly used types in educational settings are the sixteen millimeter (16mm) and the eight millimeter (8mm). Obviously the 16mm sound projector is more expensive. The advantage of the 8mm and super 8mm motion picture equipment is its cost and versatility. The instructor and students can produce their own mini-documentaries or single concept films in the classroom. The filming activity can embody many learning relationships such as writing scripts, developing objectives, improving speech and poise, and developing organizational and evaluation skills. An exciting innovation in the 8mm movie projector is the "film loop" cartridge. The film loop cartridge is much like a cassette in that it requires no threading and can be operated by the most inexperienced student. You simply pop in a film cartridge and the movie starts. There are two varieties of 8mm film loop projectors: 1) the standard projector-to-screen model, and 2) the portable integrated audio-visual unit. The portable model is similar in size to a six-inch television set. The cost is as low as $50 to $75.

Teacher and student-made loops are easy to create and are great motivators since they personalize and localize instruction. About 3,000 commerical film loops are now available. Some of the films are integrated into system packages. The National Information Center for Education (1967) has developed an index of 16mm films on a wide range of subjects. Another useful resource for films is the National Audi-Visual Association (1970) membership directory of dealers, film libraries and companies.

Audiotapes and Recorder Devices

Basically there are two types of audiotape recorders: 1) the reel to reel, and 2) the cassette. Although both types of recorders are portable, the cassette type has compactability and simplicity of operation in its favor. Furthermore cassettes are easier to store, less expensive, and easier to handle. The development of the cassette recorder has opened up invariable possibilities for individualizing instruction. In the not too distant future, the student will be able to take the recorder home with his books. The cassette recorder has great possibilities for adult

independent home study use. It has equal value for individuals in restricted and custodial care situations. There is possibility for delayed dialogue on the tape. One side of cassette tape can be used for instruction and the flipside can be used by the student for feedback or evaluation.

The National Center for Audio Tapes (1970-72) has an exhaustive listing of audiotapes on a wide range of subjects for colleges, secondary schools, and elementary schools.

The telephone is an often overlooked tool for instruction. A telephone can effect instantaneous two-way communications. It can be used to introduce instruction or receive delayed responses from materials sent by mail. The amplified telephone conference call can link together many different individuals in different locations. While on the other hand it brings specialized resource personnel into a classroom for group audiences at a cost of ten dollars per month.

The amplified telephone linkage is ideal for bringing information to individuals or groups who are under some sort of custodial restrictions. Many times custodial institutions are limited by security restrictions and cannot utilize the wealth of available resource people. The amplified telephone could provide a linkage with the real world without breaching security requirements.

Videotape and Recorder Devices

The video tape recorder, VTR as it is commonly called, is fast becoming the most exciting tool for education. Its total immediacy cannot be duplicated by any other piece of hardware. VTR provides opportunity for self-evaluation. There isn't anything as sobering as seeing oneself on television. VTR is ideally suited for role playing experiences. Teachers can record an entire physical demonstration or experiment and replay it on a monitor giving all students a front-row seat. As yet, the potential of VTR has not been fully realized.

There are three different sizes of VTR equipment. The size is determined by the width of the recording tape, one-half inch, one inch, and two inch studio tape. One major disadvantage of VTR's today is that tapes recorded on one brand or model cannot be played back on another brand or model. However, this inconsistency is being remedied by making all VTR's produced in Japan compatible. Black and white units, consisting of recorder, camera, tripod and monitor, can be purchased for a little over one thousand dollars. Advances in television technology are moving at a rapid pace. The color cassette VTR was just recently introduced. Effective use of this instructional tool will require total planning by both the instructor and learners. In this way learners will have greater voice in contributing to the curriculum development process.

Reading and Tachistoscopic Devices

Reading machines are highly specialized instructional tools. They operate by projecting printed words, phrases and paragraphs on a screen. Their basic function is to assist readers in word recognition, pacing, phrasing, phrase grouping, skimming, and reading speed improvement. The tachistoscopic is actually an image timing device. It can be a specially designed unit, or it can be a component device attached to a slide or filmstrip projector. Another type of reading machine is the language master. This unit utilizes a strip of magnetic tape that carris a prescribed sound, word or group of words. The learner can read the word, can hear how it sounds, and he car record his mimicing the same sounds.

Teaching Machines and Auto-Tutor Devices

Basically teaching machines are either manually operated or machine operated. Manually operated varieties generally utilize printed programs of a linear variety. The programs may be single sheets or continuous rolls. The learner manually advances the program to the next frame and makes a response. On the next advance, the correct answer is given.

Many auto-tutors are highly sophisticated and ingenious devices. Some machines are single system, that is they utilize only one device to channel the program. Others are multisystems or integrated systems. Some devices may simply employ slides or filmstrips with or without an audio track. Other systems may employ film loops, TV, audio tracks and response options. The response options may be written, mechanically registered or oral. The response can be set in two modes: 1) "learning mode," which will not permit the machine to advance until the correct answer is given, or 2) "test mode," which allows the machine to advance regardless of the answer given. The program system may be linear, multiple choice, constructed response or branching. The machine also provides correcting, totalling and instantaneous feedback or readout. Far too often these machines and systems have inadequate, limited and poorly constructed "software." The more options a machine has the greater is the maintenance and shutdown time.

Some Useful Resource Information

A comprehensive directory of the audio-visual industry called Audiovisual Market Place: A Multimedia Guide (Weber, 1971). It is a valuable resource index, since it includes AV producers and distributors, equipment, services and organizations, films, film loops, filmstrips, slides, tapes, transparencies, and maps and globes.

For the past sixteen years the National Audio-Visual Association (Ryan, 1970) has produced an audio-visual equipment directory that has no equal, since it goes beyond the usual listing and provides illustrations, description of function, accessories and cost.

A Guide to Educational Media (Rufsvold and Guss, 1971) is a compilation of directories, catalogs, bibliographies, listings, guides and index covering films, filmstrips, kinescopes, phonodiscs, phonotapes, programmed instructional materials, slides, transparencies, videotapes, and free materials.

ERIC Clearinghouse on the New Educational Media at Stanford University provides several useful listings and studies in the following: the computer, radio and television broadcasting, audio and videotape recorders, 8mm film loops, integrated multi-media systems, and dial access information storage and retrieval systems.

Advantages and Disadvantages of Hardware

Research (Warren, 1970) shows that learners tend to remember about 30 percent of the information that is orally transmitted; that retention is almost twice as great when oral and visual means are used. When oral and visual means are combined with an opportunity to discuss the information with other learners 90 percent of the information is retained (p. 13).

The basic advantages for the use of audio-visual devices in instruction are:

1. Provides more productive use of the teacher/learner time commitment.

2. Provides for individual differences in learning abilities.

3. Permits the extension of the scope and power of instruction by permitting self-pacing, eliminating already learned materials, and shortening the time for teaching basic concepts.

4. Bridges the gap between school, home, community and the world by making learning more immediate and relevant.

5. Gives instruction a more scientific base for evaluating growth and provides for immediate and systematic feedback.

6. Provides equal opportunity in sharing advantages of the best institutions and richest community resources.

Some of the major disadvantages of audio-visual devices in instructional are:

1. Dehumanizes
   (Many adults resent machines since the machine was responsible for making their jobs obsolets.)

2. Requires high cost
   Factors that contribute to high cost are:

a. developing and testing high quality software programs.

b. providing time for teacher training in understanding learning relationships and developing skills in hardware use.

c. employing media specialists and teacher aids (CIT, p. 237)

d. maintaining equipment.

3. Poor accompanying programs
Programs are made compatible to machines. Not enough programs developed to justify purchase of equipment.

Mediated instruction is the union of "software" (the activity, materials, and process for teaching, learning and evaluation to be communicated by the hardware) and "hardware" (the equipment and processes used to communicate the software).

Software for Adult Basic Education

Until about five years ago most publishers or commercial materials carried only a token listing of learning materials for adult basic education. What content software that were listed were overworked elementary school materials. Sadly to say, many of the materials were used outrightly with an occasional notation reading, "Also useful for adult basic education." With the emphasis on truth in packaging the label should have read, "Caution, harmful when used with adult learners." There is no wish to discredit commercial publishers for their profit motive of catering to the more lucrative and stable market of elementary and secondary education. However, adult basic education and adult continuing education will be around for a long time. It's about time that greater attention is paid to this neglected area. Adult basic educators need to articulate their specific needs to publishers.

In many cases it will take the initiative of innovative practitioners to develop their own materials, localizing them to suit specific learner needs and objectives. Such materials, depending on their quality and relevance to meet the needs of a wide audience, are sought by publishers for national distribution. Diamond and Dutwin (1967) developed a useful booklet of Guidelines for the Preparation of Written Materials for the Undereducated Adult. The guidelines also include a formula for finding the readability level of books and other print materials.

Perhaps what is needed most in adult basic education today is the family dialogue. The most obvious problem in adult education today is

CONTINUED

6 OF 7

the wide gulf in the dialogue process between the researcher and the theorist and between the researcher and the practitioner. One reason for the gulf is that professional and experienced educators are too busy meeting practical programmatic requirements. Their knowledge and theories are generally intuitive. They create innovations by acting on hunches whose validity is untested. Consequently, innovations in adult education take many years to be identified by theorists, tested by researchers and disseminated as valid theory, methods and techniques among practitioners. Thelen (1970, p. 27) provides a lucid exposition of this dialogue process in his paper called "The Educational Trialogue."

The field of adult basic education is experiencing a revolution. The most basic battle that must be won is a practical definition of adult basic education. Such a definition is preliminary to the undertaking of any adult basic education program. Far too often adult basic education educators are forced into a position of expedience by continuing to use instructional alternatives that do not work well but which have continued because they fit a concept of the literacy education model and because their patterns have been established and they have become traditional.

The traditional definition of adult basic education stresses literacy as the central theme. What is proposed here is a more practical definition that does not limit the scope of adult basic education but rather expands it.

> *Adult basic education is a transactional process of inquiry and action in the continuing stream of life-long education. Its purpose is to provide experiences for developing coping skills and strategies to improve the quality of life of adults who are functioning at a level of performance and participation that does not permit their skillful use of available alternatives and their total involvement in today's complex society (Udvari, 1972).*

Heretofore, we have unwittingly overlooked, or worse, minimized the contribution of adult education to deal with social change. Traditionally, there has been over-emphasis on method of education and degree of learner involvement instead of focusing on social issues and problems. More often than not, administrators of adult education programs embark on a program of motivating individuals to participate in some variation of the traditional sequential unit system that is irrelevant than dealing with the broader problems of conflicts and driving forces within the adult learner's life frame.

One of the primary reasons for poor participation in adult basic education programs is adults find little relevance in what the programs have to offer. Practitioners of adult basic education have observed one major idiosyncrasy of under-educated and disadvantaged adults; they attend educational activities peripherally. That is, they want to participate in programs when their desire is at a peak and when what is being taught speaks to their particular interest or need. Furthermore, they

want to participate at their own timetable: come when they can, leave when they want or when their needs have been met and return anytime they feel the urge to know. Consequently, the undereducated and disadvantaged adult views his own learning needs as discontinuous. Moreover, adults bring varied and complete learning problems to the learning setting since they have different experiences, different responsibilities and commitments, different views of relevance and different realities to which to cling.

It is now well documented that adult instruction is different from other areas of education. Miller (1964) indicates this difference in three ways: 1) its heterogeneity - adults themselves are quite different and they bring varied and complete learning problems tothe instructional setting; 2) its structure - adults possess a vast complex of prior experiences by which each new experience is judged; and 3) the maturity of the learner - adults are relatively independent persons and their maturity is indicated by the acceptance of responsibility. To meet these kinds of needs, program designs must consider and incorporate the variables of flexibility, availability, and applicability of the educational delivery system to adult learning needs.

For adult basic education to be the dynamic force it has the potential of becoming, it must provide timely and relevant strategies for adults to apply to their daily problem-solving situations. Unfortunately, such relevant subjects as basic social skills, laws for the laymen, nutrition, buying guides, getting along with people, guiding children, or simply knowing where to go, who to see and what to do to avail oneself of the available alternatives are not readily available from commercial publishers.

The Rural Family Development project at the University of Wisconsin has developed a "life coping skill program" (Udvari, 1970). RFD's major objectives are to help adults move from a position of non-involvement to one of involvement, and from a status of dependent learners to that of independent learners. To accomplish these objectives, RFD employs a three-component system of television, home study and home visitation. The learner is provided with information from which he makes judgments in arriving at action strategies of where to go, who to see and what to do. Although RFD is not a literacy program per se, it unique three track branching system permits adults to gain communication and computation skills while dealing with relevant coping skill materials to improve the quality of their lives. On the following page is the curriculum or "menu" from which the learner selects at random, building his own curriculum and his own encyclopedia of life coping skills.

There are a host of materials that are still needed to fill the ever-growing demands by adult learners.

Some New Types of Materials That are Urgently Needed

1. Materials at a low readability level, yet highly relevant to adult purposes, for use in reading skill development.

RFD

CONTENT CENTER LISTINGS

I CONTENT CENTER: ABOUT ME

Module A: UNDERSTANDING MYSELF
Unit 1: Who Am I: Accepting a View of Myself
Unit 2: Who Am I: A Positive View of Myself
Unit 3: What Affects Me: Heredity and Environment
Unit 4: What I Believe: Developing Character

Module B: MY WELL BEING
Unit 1: My Physical Health
Unit 2: My Mental Health
Unit 3: My Education
Unit 4: My Leisure and Recreation
Unit 5: Maturing and Growing Old Gracefully

Module C: BECOMING A BETTER PERSON
Unit 1: I Am Changing: How Change Affects Me
Unit 2: I Am a Person: Dignity, Integrity
Unit 3: Motivation: Self-Direction
Unit 4: I Can Make Things Change

II CONTENT CENTER: ABOUT ME AND OTHERS

Module A: MY FAMILY
Unit 1: Home is for Family Living
Unit 2: Getting Along with One's Marriage Partner
Unit 3: Understanding Feelings of Family Members
Unit 4: Guiding Children and Building Character
Unit 5: Family Good Times

Module B: COMMUNICATING WITH OTHERS
Unit 1: My Friends
Unit 2: My Neighbors
Unit 3: The Art of Listening
Unit 4: Respecting Other People's Ideas and Beliefs

Module C: WORKING WITH OTHER PEOPLE
Unit 1: People I Deal with for Services
Unit 2: People I Work with on the Job
Unit 3: People I Work for

III CONTENT CENTER: ABOUT ME AND MY MONEY

PART I: ABOUT MY HOME

Module A: MANAGING MY FAMILY'S MONEY
Unit 1: My Income
Unit 2: Family Spending Plan
Unit 3: Using My Credit Wisely
Unit 4: Family Security Plan

Module B: THE JOY OF GOOD FOOD
Unit 1: A Choice: Casserole or Stew
Unit 2: Supper on the Table on Time
Unit 3: Meals for a Day
Unit 4: Wise Planning + Smart Shopping = Good Meals

Module C: BUYING GUIDES
Unit 1: How to Buy Wisely
Unit 2: Smart Food Shopping
Unit 3: How to Buy Clothing
Unit 4: Buying Home Furnishings and Appliances
Unit 5: Satisfaction Guaranteed

Module D: HEALTH, SAFETY AND SANITATION
Unit 1: Emergency First Aid
Unit 2: Home First Aid
Unit 3: Home Safety Plan
Unit 4: Knowing Signs of Illness
Unit 5: Home Sanitation

Module E: MAKING A HOUSE A HOME
Unit 1: A Man's Home is His Castle
Unit 2: Taking Care of the Inside
Unit 3: Taking Care of the Outside
Unit 4: How to Do-It-Yourself Repairs

PART II: ABOUT MY WORK

Module A: HOW TO LOOK FOR A JOB
Unit 1: Sources of Jobs
Unit 2: Letters and Forms
Unit 3: Personal Interview
Unit 4: Important Job Facts
Unit 5: Summary for Job Hunters

Module B: HOW TO APPLY FOR THAT JOB
Unit 1:
Unit 2:
Unit 3: *Not available*
Unit 4:

Module C: HOW TO GET THE MOST FROM MY JOB
Unit 1: My Responsibilities to the Job
Unit 2: My Boss's Responsibilities to Me
Unit 3: Getting Ahead on the Job
Unit 4: Laws Protecting Workers

IV CONTENT CENTER: ME AND MY COMMUNITY

Module A: ME AND THE PEOPLE
Unit 1: Of The People, By The People, For The People
Unit 2: The Declaration of Independence
Unit 3: Our Constitution and What it Means
Unit 4: How We Organize to do Business in America

Module B: MY GOVERNMENT, HOW IT WORKS
Unit 1: In My Community
Unit 2: In My State
Unit 3: In My Country
Unit 4: In the World

Module C: CITIZENSHIP IS TAKING PART IN DECISIONS
Unit 1: My rights as a Citizen
Unit 2: My Responsibilities as a Citizen
Unit 3: Being an Informed Citizen
Unit 4: Population! Pollution! Conservation!

Module D: WHERE TO GO, WHO TO SEE, WHAT TO DO
Unit 1: Welfare and Employment Services
Unit 2: Medical and Health Services
Unit 3: Legal Aid Services
Unit 4: Leisure and Recreational Services

2. Integrated materials designed to teach decoding and encoding skills in reference to specific coping strategies.

3. Low readability level materials developed to enhance critical and creative thinking abilities for problem-solving relationships.

4. Vocational and technical materials written on an independent instructional level for upgrading employment skills and for opening opportunities for new careers and upward mobility.

5. Instruments designed for informal testing for placement and growth assessment, and instruments for self-diagnosing to enhance independent study.

No single publisher can be expected to meet all the criteria for effective software materials for adults. As often is the case, one publisher may specialize in reading materials, another in mathematics, and still another in life-coping materials. Consequently, materials should be closely evaluated in terms of how well they meet the specific objectives and purposes of the learner. Neff (1969) has developed a list of criteria for evaluating reading materials that might be useful for this purpose.

Many state directors of adult basic education have undertaken projects to evaluate existing adult basic education content materials produced by commercial publishers. Some evaluations include a readability designation in terms of grade level equivalency. One such evaluation is the Adult Basic Education Instructional Materials Guide (Utah, 1969). The authors emphasize the fact that the guide is a suggested list of some materials that may be obtained for more effective instruction of adult basic education. The guide includes: 1) a listing of adult basic education materials presently available by curriculum area, 2) names and addresses of publishers and agencies supplying adult basic education materials, 3) suggested grade level use of materials, 4) adult basic education practitioners' evaluation of the material, 5) purchase cost per unit, 6) rental cost per unit, 6) rental cost per unit, 7) information whether the materials are programmed, basal and/or enrichment, 8) whether the materials were films, filmstrips, transparencies or slides, the showing time or number of items in a package, and whether they were color or black and white.

An excellent annotated bibliography of adult basic education materials was developed by the federally funded Center for Adult Basic Education, Evaluation and Learning (CABEL, 1970). A more sophisticated version of this bibliography has been developed by the National Multimedia Cneter for Adult Basic Education (Montclair State College, 1971). Each citation in the annotated bibliography is on individual five-by-eight index cards.

On the following page is a list of criteria for implementing the instructional process. The same criteria can be applied to determing the whole range of instructional technology.

CRITERIA FOR IMPLEMENTING THE INSTRUCTIONAL PROCESS (Udvari,69)

ABILITY LEVEL	What is the range of ability or degree of maturation for each learner?
PSYCHOMOTOR CAPABILITIES	Are the learners capable of manipulating the materials? What is their psychomotor ability?
INTEREST STIMULATION	Will the material and activity stimulate the learner's interest and increas his attention span?
ACTIVITY RELATIONSHIPS	Is the activity in the realm of the individual's active knowledge realm? Is the activity related to present living experiences of the learner, and is it socially significant?
CHALLENGE	Is it hard enough to challenge yet easy enough to insure some degree of success?
ACTIVITY FLEXIBILITY	Is the activity flexible enough to allow for unforseen constraints. Does it provide for individual differences, giving the learner the feeling that the program was designed especially for him?
MOTIVATION	Will the activity lead to more worthy things, fostering an inquiring and investigative attitude?
PROCESS DEVELOPMENT	Will the activity develop relationships leading to organization of experiences by locating information, assimilating, comparing, evaluating and concluding?
CONCEPT FORMULATION	Will the learning experience embody concepts relative to "growing & developing," "decision making," and interacting" which are vital for physical, mental and social maturity?
TIMELINESS	Does the activity give promise of outcomes relatively valuable in life today?
COORDINATION/ INTEGRATION	Will there be a correlation and integration with the home, community, state, nation and world?
CONDUCIVE ENVIRONMENT	Is the learning environment conducive for wholesome release of free expression and creative exploration?
HEALTH, SAFETY AND WELFARE	Have considerations been made relative to the health, welfare, and safety of the learner?
BEHAVIOR MANAGEMENT	Will behavioral management considerations contribute to the education rather than adjudication of learners?
METHODS AND MEDIA	Are methods and media considerations included in the teaching-learning processes?

Utilization of Hardware/Software

The utilization of hardware and software is the learning process in action. Effective individualized learning materials do not necessarily require a special place to perform the act. However, for the sake of meditating individual differences among many learners, specialized centers have been designed. These centers go by many names, such as learning resource center, instructional media center, learning laboratory, multi-media center, educational development laboratories, and so on.

Essentially a center for individualized learning experiences is a school. Not just any kind of school. It is a unique school that is a self-contained learning environment that provides a variety of arrangements for learning through some form of individualized or programmed instruction.

One major arrangement for learning is flexible scheduling. Since the center is built around the idea of voluntary enrollment, it only stands to reason that learners participate at their own timetable: come when they can, leave when they want, return anytime they feel the urge to know (the teachable moment), and quit when their needs have been met.

Aside from the facilitator (teacher) and learners there are three major components of a center:

1. The learning environment, including such things as non-graded classrooms, continuous programs, experience stations, tutorial or personalized interaction, and human welfare considerations.

2. The program or software, including such things as books, progressive skill development materials (basal series), multiple level kits, programmed texts and workbooks, and correlated worktests, diagnostic and prescriptive tests (pretest, curriculum-embedded, and post-test).

3. The mediation or hardware, including all types of devices: manual and automated, still and motion visuals, instruct and response audios, teaching machines and auto-tutors, single and integrated mediation systems, linear and branching programs, and information retrieval systems and computer assisted instruction.

One major disadvantage of an adult learning center is that most of them are literacy skill oriented, specifically teaching the "3-R's" from grades one through eight. In this same regard, there are few mediated programs designed for life-coping skill development. Moreover, there are few mediated programs specifically designed for adult basic education in general. The "3-R's" in adult basic education should be ROLE, RELATIONSHIPS, and RESPONSIBILITY.

Some of the advantages of learning centers are:

- flexible scheduling
- individualized instruction
- self-instructional systems
- self-pacing
- diagnosing and self-prescribing
- immediate feedback
- re-usable programs

The computer (Johnson, 1970) looms as potentially the most significant of all the products of the technological revolution because of the range of tasks it is capable of performing. It can facilitate research, keep records, monitor performance, and assist in the instructional process (p. 95). North Carolina State University has experimented with computer assisted instruction (CAI) and individualized program instruction (IPI) in their Learning Laboratory. Sherron (1969) provides an excellent survey of instructional systems research and suggests a CAI research design for undereducated adults.

Suppes (1967) and his staff at Stanford University have attempted to build a program for individualized instruction through three levels of student-computer interaction. The first level is drill and practice and is used to supplement the regular curriculum taught by teachers. The second level is a tutorial system used to develop skill in a given concept. The third level, still in the development stage, is the dialogue system. In other words, we will be able to talk with the computer. The time is not too distant for computer sharing from a home telephone.

Several comprehensive guides have been developed on how to establish and maintain a successful learning center (University of Texas, 1971; Superintendent of Schools, White Plains, 1969). A step-by-step outline is provided on the administration, function, and operation of a learning center. Also included are outlines of goals and objective, personnel needs, funding, recruitment, evaluation, and program recommendations for software and hardware.

Summary and Conclusions

The uniqueness of man is his ability to extend himself. The new emerging instructional technology has the potential to extend man's facility and capacity for qualitative and quantitative learning. It is, therefore, vital that facilitators of learning acquire new insights into process relationships and the dynamics of technology. The new insights will enable facilitators to:

1. Design satisfying learning experiences relevant to individual and/or group purposes.

2. Define and expand their role as facilitators with respect to the relationship between the learner, the instructional technology system, and the content to be learned.

3. Become competent in the skillful use and application of instructional technology to the learning experience and the needs of individual learners.

Instructional materials prepared for use in secured and nonsecured settings must be especially well designed and thoroughly tested, since both the facilitators of learning and the custodial agents cannot afford the problem of illogical, irrelevant, demeaning, and frustrating programs. Far too often harassed administrators of educational programs are unwittingly put into the position of expedience in accepting unproven instructional materials which are offered as a panacea. The use of instructional technology does not guarantee success in the learning experience. Any instructional system is only as good as the individual employing it.

Adult basic education objectives and programs developed for correctional institutions should be the same as those for adult learners in the open society. The global objective of education in correctional institutions is to assist norm violators to become productive and contributing citizens. This can be accomplished by developing relevant educational programs that speak to the learner's individual purposes and that employs adjunctive technology to enhance and expand the learning and what is to be learned.

The most vital consideration for the use of instructional technology is that the content (software) for a machine based program is more important than is the reliability and versatility of the machine (hardware). And finally, different methods work best with different learners. No single book, series, package/kit, machine based program, or integrated system is best for all, since some learners may learn best through traditional means.

References

Cabel, N. Adult basic education bibliography: Final report. Washington: U. S. Office of Education, 1970.

Camp, J. H. The learning laboratory. Raleigh; Department of Education and North Carolina State University, 1967.

Commission on Instructional Technology (CIT). To improve learning: A report to the President and the Congress of the United States. Washington: Committee on Education and Labor, House of Representatives, 1970.

Diamond, H., & Dutwin, P. Guidelines for the preparation of written materials for the undereducated adult. Montclair, N. J.: Adult Education Resource and Service Center, Montclair State College, 1967.

Johnson, E. I. Technology in education. In R. Smith, G. Aker, & J. Kidd (Eds.), Handbook on adult education. New York: The Macmillan Company, 1970.

Laswell, H. D. The structure and function of communication in society. In L. Bryson (Ed.), Communication of ideas. New York: Harper and Brothers, 1948.

Miller, H. L. Teaching and learning in adult education. New York: Macmillan, 1964.

Montclair State College. Annotated bibliography for adult basic education: Supplementary report. Washington: National Multimedia Center for Adult Basic Education, 1971.

National Information Center of Educational Media. Index of 16mm films. New York: McGraw Hill, 1967.

National Information Center of Educational Media. Index to 35mm educational filmstrips. New York: McGraw Hill, 1968.

Neff, M. C. Methods and materials for adult learners. In N. C. Shaw (Ed.), Administration of continuing education: A guide for administrators. Washington, D. C.: National Association for Public School Adult Education, 1969.

O'Connor, M. L. (Ed.). National adult basic education bibliography. Compiled by Center for Adult Education, Evaluation and Learning. Montclair: National Multimedia Center for ABE, Montclair State College, 1970.

Rufsvold, M. I., & Guss, C. Guides to educational media (3rd ed.) Chicago: American Library Association, 1971.

Ryan, K. A. The audio-visual equipment directory (16th ed.) Fairfax, Virginia: The National Audio-Visual Association, 1970.

Sherron, R. H. The use of modern educational technology for instruction of undereducated adults: Research possibilities. Raleigh: North Carolina State University, 1969.

Superintendent of Schools. A guide for establishing a learning laboratory. New York: White Plains Board of Education, 1969.

Suppes, P. On using computers to individualize instruction. In D. Bushnell & D. Allen (Eds.), The computer and American education. New York: John Wiley & Sons, Inc., 1967.

Udvari, S. D. Educational CONFIRM analysis: An introduction to a new approach in the curriculum design process. Madison: The Board of Regents, the University of Wisconsin, 1969.

Udvari, S. S. New curriculum designs for the culturally unique. Paper presented to the Cherry Hill Conference on Curricular-Instructional Materials and Related Media for the Disadvantaged Adult in the 1970's, Cherry Hill, New Jersey, February 4, 5, 6, 1970.

Udvari, S. S. Applying research innovations and ideas. In C. Klevins (Ed.), Materials and methods in adult education. Canoga Park, California: Klevens Publishers, 1972.

University of Texas. How to establish a learning center. Austin: Extension Teaching and Field Service Bureau, Division of Extension, 1971.

Utah State Board of Education. Adult basic education materials guide. Boise: State Board of Education, 1969.

Warren, V. B. (Ed.). The second treasury of techniques for teaching adults. Washington: The National Association for Public Continuing and Adult Education, 1970.

Weber, O. S. (Ed.). Audio-visual market place: A multimedia guide. New York: R. R. Bowker Co., 1971.

HARDWARE AND SOFTWARE FOR ADULT BASIC EDUCATION IN CORRECTIONS

Will Antell
Minnesota Department of Education
St. Paul, Minnesota

Foreword

The author is an American Indian, born and raised on an Indian Reservation in Minnesota. The first eighteen years of his life were spent on the White Earth Indian Reservation in the northern part of Minnesota. He attended public schools on and off the Reservation. This experience has been invaluable. Most Americans cannot understand the complexities of living in two worlds, or life styles which eventually come into conflict.

During the past three years he conducted an experimental adult basic education program entitled "Opportunities Unlimited for Minnesota Indians - Adult Basic Education". This included programs in two correctional institutions in Minnesota, and those experiences have generated significant conclusions on reaching the incarcerated Indiana population.

Finally, his experience as a member of the Adult Corrections Commission which paroles, discharges, and continues incarcerated men and women in all adult correctional institutions has afforded him the opportunity to talk with thousands of inmates.

Brief Overview

This paper will draw upon a variety of personal experiences. It is not intended to satisfy the highly academic who will judge it on the merits of sound research techniques. Rather, it will provide those close to the scene some alternatives for improving educational experiences for men and women who have temporarily lost their freedom. No doubt, it will be provocative and for many will only be another mechanism to do nothing. However, there is hope and it is in this spirit the paper is submitted.

The central theme of the paper will focus on "Flexibility for Diversification." The presentation is separated into four parts. The first is devoted to a brief overview of correctional institutions and educational programs. The second suggests a model for curriculum development. The third offers delivery systems which can be utilized with the aforementioned curriculum for internal or external use, and the final part is the summary.

An examination of inmate population will immediately illustrate variations in the following groups: racial or ethnic, religious, socioeconomic background, intelligence, skills, interest, education, and difference in felonies committed. Given these circumstances, it is obvious the

innovator must come forth with plans to meet the needs of all. It is a delight to introduce some innovations which are long overdue.

Dr. David Fogel, Commissioner of Corrections in Minnesota, has consistently stated "Correctional Institutions must be part of the total community." Yet, most are still isolated and considered another world by both those inside and outside the walls. Can rehabilitation really occur when expectations are so high when the incarcerated regains his freedom? Total penal reform cannot be realized by one specialized group. It must be accomplished by involving the total community. Educators would be grossly negligent if they missed this vital opportunity to use their imagination and expertise in participating in such a humanitarian task. Man, in a variety of settings can expound on the virtues of knowledge. Alone, it can be worthy and self-satisfying to a large segment of society. Obviously, it has led to productive and meaningful lives to millions of Americans. On the other hand, countless citizens of this great nation have been paralyzed into oblivion. They are illiterate or do not possess the skills to maintain a decent life. Combining knowledge with, and utilization of, appropriate skills, no doubt, is the goal of all men. Without question our success speaks for itself . . . at least if we value technological development, scientific achievement, etc. This nation as a whole may have succeeded. This issue will be decided by the historians and future generations.

An examination of adult basic education in correctional institutions raises an elementary question. What will an individual be equipped to utilize when he reaches the equivalent of an eighth grade education? Obviously the acquisitions of basic skills at this level is not an end in itself. No one can be convinced adult basic education is worthy unless changes are made. As a beginner, let's throw out the term adult basic education. No more rhetoric. Action! Let us call it "Cooperative Basic Education." The client and counselor (teacher) can cooperatively outline a sequence of activities where both know where they are going and how they will get there. In no way do they stop after they have reached an eighth grade level. There should be no program if that is the desired outcome. In planning programs, both the client and instructional staff must clearly understand some elementary considerations.

Model for Curriculum Development

A fair distinction in the educational enterprise may be to differentiate between curriculum and instruction. Such a distinction may suggest that curriculum includes those things that students (or in our context clients) learn, and the activities over content that are used to engage students. Instruction may include the artful application of teaching skill to bring clients to the goals of the curriculum. In these remarks, the contention is that software may include a precisely drawn curriculum; while hardware may include the technical pedagogical skills that direct and encourage clients through a sequence of instructional activities toward the goals of that curriculum.

The hardware can be applied, and will be effective, only to the extent that there exists carefully defined and written curriculum. Whether a client is to interface with a cathode ray tube, or a piece of paper, that equipment (the hardware) is useful and justified only to the extent that any learning the client experiences as a result of that inter-action be related to goals of the curriculum. Also, there must be carefully and accurately defined expectations for the outcome of that inter-action.

There are some critical dimensions of curriculum development which are necessary to a sound instructional program in any setting. In the setting of the penal institution, where the clients are adult, many illiterate or nearly illiterate, the dimensions of curriculum are even more critical.

A central issue in this setting is that the curriculum be ordered to provide for flexibility, individual placement and individual pacing; in a word, individualized instruction. I am aware of the dangers of building my case on what is fast becoming, if not already, a hackneyed cliche on the educational scene, namely individualized instruction. Nonetheless, I challenge you to consider with me some genuine aspects of individualized instruction, and the implications for serving inmates at the nation's prisons.

Criterion Referenced Curriculum

The individualized instruction program must be built from a criterion referenced curriculum. The curriculum must be defined as what clients will learn. It is no longer tolerable to think of a cooperative education program in terms of worn-out topics from the "Seven Cardinal Principles of Education" (or however many there were!). The curriculum must be defined as competencies in mathematics, communication, language-arts, natural sciences, and the social sciences. For example, a communication curriculum must begin by describing as skills, what is involved in communication, and what a person "can do who is a skilled communicator."

A dimension of communication is reading. Reading involves decoding skills, comprehension, vocabulary knowledge. Each of these must be defined as "what people do." The phrase is "behavioral objective." Depending upon which side of that issue you may fall, reading (or any skill and learning) is something people do, and it must be described in that way. A curriculum cannot be adequate when it is a listing of topics, or a description of what teachers do. The curriculum must be described as what the clients will learn, and how it can be determined that students have attained those learnings. The curriculum must be described as performance criteria: descriptions of student performance related to the content of the curriculum, hence criterion referenced curriculum.

Some comment about the typical content in a cooperative education program is appropriate. Generally the predictable topics are included with mathematics, communication, natural sciences, and social sciences. We need to be certain that the social sciences offer an accurate portrait of

society, to include realistic presentation of the American social order in the sense of showing accurately the place of all members of that social order. The communications curriculum must include skills well beyond reading. Clients must attain a high level competency in securing and dealing with information. The curriculum must include skills well beyond reading. Clients must attain a high level competency in securing information from listening and reading. A communication curriculum must equip clients with skill and confidence in communication in a one-by-one; vis-a-vis conversation; in small group settings and confidence in talking before groups.

Identifying and Sequencing Instructional Activities

The building stones of a curriculum are the attainment of many skills that lead to the final competency of the curriculum. This requires a complete identification of all requisite skills leading to the final curriculum goal, and that materials and activities be selected that will bring about each requisite skill. When requisites are identified, they are placed in sequence so that a learning required for one skill precedes the activity associated with that skill. Sequenced activities must provide clients with all skills required for the curriculum goal. Activities must be provided in an array as to thoroughly reinforce skills. When a sequence of activities is completed, a total curriculum will be described as a sequence of activities leading to a final competency. Each activity will require a skill or knowledge from preceding activities, and each activity will have some clearly defined and observable outcome. When curriculum activities are sequenced in this way, we are ready to consider an instructional program, with flexibility, to serve every client at a level consistent with the client's ability.

Placement Strategy

When a curriculum is described as student performance criteria, and the instructional activities of the curriculum are sequenced, the instructional program must offer an effective strategy to get clients working on instructional tasks. Placement strategy involves an observation of client performance. The work that a client can do is compared with the performance criteria on an instructional activity to determine the student's beginning point. Information science people speak of "plugging the student into" the sequence of instructional tasks. For example, if we define the mathematics curriculum as a sequence of two hundred unique and sequential skills, and the student is able to perform the first twenty-five to criteria, his instruction begins with task number twenty-six.

Progress Monitoring

Once a client is placed in the instructional program, his progress must be monitored to note his success in attaining skills called for in the sequenced tasks, and to provide counsel as the client experiences

difficulty with some of the tasks. Essentially, monitoring involves a continuous information feed-back of two kinds of information:

(a) Quantity: How much or how many instructional activities the student is doing and

(b) Quality: Is the student's performance up to criteria in the tasks that are completed.

It is in this progress monitoring aspect that there is possibility for intervention by culturally sensitive counselors, i.e., teachers, and by technological support to record client responses to instructional stimuli. In cooperative education as well as any instructional program, clients will engage in activities called for only to the extent that the consequences to their doing so hold some satisfaction to the client. The culturally sensitive counselor can offer reinforcement in the form of support or interpretation at points of difficulty. It should be noted that an individualized instructional program does not preclude or negate the role of an interested person in a "teacher-counselor role."

The individualized instruction program begins with a clearly defined sequence of objectives, places a learner in this sequence at a level consistent with his existing skill, and then offers positive reinforcement that is directly related to that persons Cultural Orientation and total personality makeup. It is positive reinforcement that captures and holds the client's interest. Positive reinforcement provides satisfaction for successful completion of instructional tasks and is able to keep the student working over difficult tasks. Persons genuinely knowledgeable and sensitive to the client's culture or ethnic make-up are best suited to intervene and support in this way.

An important part of success, however, rests with the accumulation and interpretation of information about client progress. Here is where technology (computer science) may hold great promise. One counselor is able to relate productively to many clients if the counselor has access to recent and summarized information about student work on instructional tasks. Armed with such information, the counselor can help the client deal with tasks where the student is experiencing difficulty, or encourage the client to keep working subsequent to successfully completed tasks.

The strongest and most useful impact of teachers in the instructional program, is through the positive reinforcement an interested teacher can provide to clients. Positive reinforcement is applied through interactions with clients, not through interactions between the teacher and the clients' paperwork. Psychologists suggest that there is some reinforcing quality in completing a task "correctly." Social reinforcement, however, is more powerful! The computor technology can do the analysis of client responses to instructional tasks (paper work), providing performance criteria within the curriculum have been clearly spelled out.

Individualized instruction need not be a cold, impersonal instructional approach with students working for long hours in isolation, as

critics of individualized instruction purport. Individualized instruction, when accurately carried out, means an instructional program that is sufficiently flexible to serve the uniqueness of every individual in the instructional program. The instructional tasks provide sequenced activities to bring that individual to the competencies of the curriculum. The role of the teacher in an individualized instructional approach involves generally two functions:

(1) Diagnosis: Identifying the skill/knowledge level of the client in order to accurately place the client in the sequence of instructional tasks; and

(2) Reinforcement: Provide positive social reinforcement for the client to keep the client working in the sequence and assist with difficulties the client experiences.

The second function of the teacher is often extended to include some dimension for small group interaction between teacher and client. I stress interaction, as contrasted to "teaching" in the traditional sense which usually involves a teacher "talking at" students. The more traditional orientation or teacher role is one of dispensing information to clients. With the invention of the printing press, TV, the central role of the teacher should no longer be "talking" or lecturing at clients. The teacher's role that involves interaction with clients is one in which the teacher serves as expeditor or as impetus for interaction over curriculum content as clients have a common information base. This activity is particularly relevant in the social sciences. In the social sciences clients can extend insight from common information bases as they interact over issues, ideas, and aspects of the social milieu.

Mastery

A fundamental notion to the criterion referenced curriculum is that the curriculum is defined as what clients learn. Mastery suggests that the major concern is for client mastery of curriculum goals. Mastery means the attainment of learnings. Mastery does not depend on time as in a traditional course. The cooperative education curriculum is not a "course of study" that "teachers---teach," that clients "take" for a prescribed time period of a semester, quarter or year. The client has completed the course when he has mastered the skills or knowledge of the curriculum; the time dimension is a function of that client's uniqueness in dealing with the activities. Heaven knows most adults in penal institutions have one thing in great quantity, namely time.

Delivery Systems

Now that certain strategies have been suggested, let us now look at some delivery systems. All curricula have diverse opportunities for

implementation. Individualized instruction for mastery can be delivered by radio, television, video tape, and recordings. Learning experiences basically revolve around the teacher and client; however, hardware can expedite and broaden the opportunities. However, to utilize the media in this manner, careful consideration must be accorded to the development of an overall strategy which can provide worthy cooperative learning experiences.

The strategy in developing curriculum (software) outlined earlier must focus on issues which are important to the client. Learning experiences of man can no longer be relegated totally to decisions by the teacher. Education must be meaningful and productive. This is especially important for incarcerated men and women. They must be involved in this process. Make them feel learning is for them, not what others perceive their needs to be.

It must be acknowledged the aforementioned discussion will relate primarily to internal use. This obviously means correctional institutions will have to re-establish their priorities. The shift from strong custody practices to rehabilitation has obviously begun. However, the over-reaction to clinical observations and practices has once again placed educational training to a secondary status. Resources, staff and time must be provided adequately. What has been suggested may be costly, but if society is committed, and I believe they are, resources will be provided and applied.

The vast array of resources outside the walls must be utilized. It is time to use them. Several goals can be achieved if men and women would be permitted to leave the institution. They could learn a trade, pursue cooperative learning experiences, be gradually phased back into society. And more important, it would require community involvement and support. Incarcerated men and women should be allowed to attend other public institutions away from the correctional institution. Why not let them attend the public school system, vocational schools, colleges or universities? Can we utilize on-the-job training for the incarcerated no matter what the achievement level? We must experiment with programs outside the walls. No doubt the screening process will have to be carefully implemented, because all felons should not be afforded this opportunity outside the institution. The media with carefully planned curriculum can accomplish the task for serious offender. What incarcerated individuals need is understanding and respect. The large numbers of men and women who I have talked to as a parole board member, have convinced me that their over-riding fear is not being respected and understood. Many have admitted to their illiteracy. However, the methods and procedures of upgrading their basic skills has left them cold and unmotivated.

The media in a variety of forms can provide exciting and meaningful experiences to the client. Every correctional institution should have well established and up-to-date library or media centers. That is not to suggest material which is traditionally selected by a librarian, but media they are interested in. Best seller novels, and current literature which is popular reading, will, no doubt, motivate better reading

and interpretive skills. The diversified interests of all groups can be accommodated if they have access to materials reinforcing their pride and dignity. All mankind has a desire to search for identity, and it behooves the institution to respond accordingly. The library should not be confined to one location. Mini-libraries or resource centers should be spread throughout the institution where it can be readily utilized.

Summary

In these few remarks, I have attempted to describe an approach to the cooperative education curriculum serving inmates. I have suggested that the curriculum of this program must be defined as skills and knowledge that clients attain, and those attainments are reached by way of sequenced instructional tasks, building one by one to the final competencies of the curricula.

The role of technology is to serve as information summarizing for teachers, to provide summaries of client responses, both in quantity of work that clients do and in quality of work completed. The "hardware" can only serve the "software." The computer can summarize and report only on those programs it holds, and can report client programs against performance criteria that is programmed into the machine. It is for the role of the teacher to offer positive reinforcement, culturally sensitive, to each client. Positive reinforcement for work completed to criteria, and positive reinforcement that will keep students working over difficult tasks. The cooperative education program I espouse is a criterion-reinforced curriculum for mastery. A curriculum that is described as criteria for client performance, and built with sequenced tasks that allow for mastery by all clients, without regard for artificial and arbitrary time blocks for completion of work. The curriculum is built to accommodate the uniqueness of every client.

Delivery systems, whether inside or outside must be flexible. If the institution cannot provide worthy educational experiences internally, business, industry and educational institutions externally must be utilized to meet the growing demands for the incarcerated man.

We must explore ways and means to apply these dimensions to the cooperative educational needs of men and women in correctional institutions. It is not so much to request and consider these concepts as a beginning, but rather, as a continuation of an overwhelming responsibility. We must remember that we can speak of cooperative education with the tongues of men and angels, but if we do not affect a realistic approach that will benefit these adults, we are sounding brass and tinkling cymbals.

HARDWARE AND SOFTWARE FOR ADULT BASIC EDUCATION IN CORRECTIONS

John M. McKee
Rehabilitation Research Foundation
Elmore, Alabama

Educators for years have talked a game of individualized learning-now they're doing something about it! Previously they didn't know the rules of the game; they didn't have the instructional materials and equipment to accomplish it; and they lacked administrative and financial support for innovative changes in the way people acquire basic education skills.

Potentially effective "hardware" (teaching machines, multimedia instructional equipment) and "software" (paperbound texts and visuals) have been around for better than ten years, but only in the past three years have we learned how to maximize their use and how to evaluate them. Adult educators have now arrived at some definite criteria for the use and assessment of hardware and software in adult basic education programs.

The process by which educators developed a feasible way to systematically employ the hardware and software followed a series of sequential steps. A most significant and fundamental task was that of establishing behavioral objectives for an adult basic education program which required a clear statement as to what the student should be able to do as a result of having been taught. Accomplishing this task led directly to an individualized assessment of the learner's deficiencies. The next step involved selecting materials and devising learning-management strategies that remedied these deficiencies. The final job was to devise ways of evaluating learner progress and achievement. To so quickly sum up the various stages of development-from establishing behavioral objectives to devising ways of evaluating learner progress-oversimplifies the extensive work that has gone into developing what is rapidly becoming a truly authentic learning system.

A learning system, in its best form, is a highly structured way of accomplishing a broad educational objective for all who are processed through it. Frequently called an individually prescribed instructional system--or IPI--its principal objective is to pinpoint and correct academic deficiencies as determined, usually, by a normative diagnostic test. The system contains built-in controls over its operation, e.g., criterion-referenced tests, recording of individual and group performance, and systematic motivational procedures. The student's performance is almost continuously monitored, thereby allowing a learning manager to make periodic checks on an individual learner at any time. In addition to providing desirable individual evaluation, such feedback provides the learning manager corrective information for the overall system's improvement and further development.

The heart of the IPI System is the instructional materials--the software with which the learner interacts. To achieve maximum learning

effectiveness, instructional products should lend themselves to individualization by allowing self-pacing by the student, active responding, frequent and immediate feedback on learning progress, and sequential arrangement of the subject matter into optimum learning steps.

Programmed instructional products best meet these criteria (McKee, 1971). Conventional textbooks, in contrast, hardly permit individualization, rather they promote a less effective method of teaching which often becomes a lock-step process. Moreover, to accomplish the objectives of individualized instruction using conventional textbooks, considerable tutorial assistance must be provided to the student. This fact does not, however, preclude the use of good non-programmed materials; there are gaps in programmed materials, e.g., in current events, that can only be filled by other means.

Except for some gaps in special areas, programmed instructional products are overwhelmingly available on the commercial market. The Hendershot bibliography (1968) lists hundreds of programs in dozens of subject areas, and more are pouring off the press daily. The problem facing the adult basic educator is one of selection. This task is time-consuming, complicated, and expensive and can be best performed by those learning centers which are sensitive to the need for evaluation-by-tryout. Catalogs and listings, even of national clearinghouse, offer little by way of critical evaluation of the materials they list so this task usually goes unattended. Some federal agencies, such as the U. S. Office of Education, and some universities which collect educational materials, periodically release evaluation reports frequently recorded on checklist forms containing useful but insufficient data. Nor are state departments of education of great help. Frequently they approve materials without the benefit of tryout and adequate sampling of materials available often times within the constraints of politics and the pressures of product salesmen. Meanwhile, instructional products continue to be published at an ever-increasing rate.

Hopeless? Not quite. Administrators of adult basic education programs can be equipped to recognize and reject products that cannot fit into an individualized program. They can use a number of available resources, such as catalog listings, evaluation reports, clearinghouses, regional and state learning centers, and Area Manpower Institutes for Development of Staff. The adult education director should also subscribe to certain publications that can help him to stay abreast of advances in instructional products. Notable among such journals and magazines are "Educational Technology, Training in Business and Industry", and the NSPI Newsletter. A listing of resources and publications in adult basic education is attached to this paper.

Toward Better Software

Many programmed instructional products are dull and colorless. They seem to be written by people whose only concern is to break all content down into "small steps" --no matter that the student is crushed by the

monotony of it all. Such programmed texts are replete with simpleminded "copy frames" (Markle, 1969) requiring the learner of English usage to respond merely with the missing noun, verb, or adjective of the statement. Some programmers even have a "system" for "holing" a sentence, leaving out a noun first, then a verb, and finally an adjective or adverb.

While such programs can teach fairly effectively, learning adult education skills can be enhanced considerably by the extensive use of graphics, humor, color, and variety of style. When instructional materials are prepared with the effective use of these features, motivation or reinforcement becomes intrinsic, encouraging less dependence upon extrinsic or "synthetic" reinforcers. Most unimaginative programs follow a "linear frame" format and may contain thousands of sequenced statements with one or more blanks to be filled in by the student, usually on a separate sheet of paper. Shorter linear programs, requiring less than two hours to finish, are far better than the lengthy ones in that they give the student a quicker sense of task completion and thus prevent the overwhelming feeling that there is no end in sight.

While linear programs constitute perhaps over 80 percent of all available programmed texts, a superior format is becoming increasingly common on the market. It combines the best features of the linear structure, e.g., prompting of responses, fading of cues, and shaping of the repertoire; liberally employs graphics and other forms of art work; and contains student validation data. Some of these types of programs, e.g., those of the Rehabilitation Research Foundation, follow the "Mathetical" system of behavioral analysis (Gilbert, 1962) and are characterized by branching, discrimination and generalization training, and the requirement of student-constructed responses.

Vast numbers of programmed instructional products only require the student to discriminate between the correctness of one statement or word and another. These multiple choice discriminations are characteristics of intrinsic branching programs and many teaching machine programs which require the student to push one of several buttons for the correct responses. Since this format is rigidly locked in no allowance can be made for constructed responses, even though they may be obviously needed.

In summary, there are an increasing number of good software programmed texts appearing on the commercial market. Some have been prepared using behavior science principles. Some are flexible enough to permit individualization of instruction. The lengthy programs of the past are being replaced by shorter ones that permit a quick sense of task completion. Some programs of quality generate high interest, even excitement, in learning. Most programmers have so thoroughly mastered the process of establishing behavioral objectives that this operation can be hidden. More variable style, the use of color, and improved layout are common the the better programs.

Instructional Hardware

During the middle '60's teaching machines flourished. Since 1968 there has been a steady decline, except for computers, in their purchase and use. Many are sitting in storage closets. New personnel taking over programs are surprised to discover them and ask why they aren't being put to use.

The answer is known by anyone having lived through this era. First, machines were constructed by engineers and sold by manufacturers who knew little about how people learned. These entrepreneurs merely want to cash in on the "educational revolution." When educators asked the salesmen how many programs existed for them, beyond the demonstration one, they quickly learned to say, "The best thing about this machine is that you can write your own programs-fill in the instructional gaps as 'you' see them." A few more machines were sold by this gimmicky statement. Then the user discovered how expensive and how punishing it was to "Write your own." At that point, machines, programmed instruction, and the education revolution were shelved, and a wave of cynicism set in. At this time, too, software production came close to shutting down. Programming firms that had started up one month folded the next. They discovered programs were too expensive to develop, validate, and market. The educator was also experiencing difficulty in getting students to complete programs; a motivational problem that wasn't to be solved until people like Homme (1968) made their contribution.

The simple truth of the matter was that teaching machines were recognized for what they really were: expensive page turners that cost entirely too much to start with and later to keep in repair. If they could track and record student responses and progress, they might replace a clerk charged with that responsibility.

During this period, the super teaching machine--the computer--was being tried out in a number of experimental-demonstration projects throughout the nation. The enormous expense of computer-assisted instruction (CAI) prevented its widespread use. Moreover, as was the case with the early teaching machines, the programs that went into the computer were of a short, demonstrational sort. And when more programs were written, they were not exchangeable between one make of computer and another.

But the cost of CAI has come down. For example, a terminal computer can now be purchased for less than $2,000, and this terminal can be put on line with one or more other computers at a cost between $200 and $600 per month. But then there is always a maintenance bill due quarterly.

CAI has particular value for special instructional purposes. For example, computers have great value in the training of physicians for they can simulate medical cases which the student may never encounter in the clinics or hospital where he receives his practicum training. But with regard to CAI in prison educational programs, it is something not to expect, or even ask for.

What Hardware is Appropriate for Adult Basic Education?

If you have functioning teaching machines and programs for them, use them. Students will learn. There is nothing intrinisically "bad" about these machines. They don't "mechanize" the student or teacher or the learning process. Nor do they promote "dehumanization," certainly not to the extent that lock-step, talk-down instruction is likely to.

An area where hardware is all-but-required in adult basic education is in the teaching of reading. Visual aids, tape recorders, pacers, and tachistoscopes are essential if the extensive use of tutors is to be avoided. Even in the best reading labs, tutorial instruction and close monitoring will be necessary, but equipment can save considerable expense and time matters of great importance to correctional adult basic education programs.

The Integration of Hardware and Software into an Adult Basic Education System

Equipment and software programs are but two--albeit crucial--instructional contingencies in an individualized adult basic education system. Other important contingencies concern the individualization process, pinpoint diagnosing of deficiencies, for example, and the maintenance of a high level of accurate, responding behavior, generally called motivated behavior.

Contingency Management Techniques

The contingent relationship between the materials and equipment, the response to them, and the consequences that follow is a special domain of educational technology called "contingency management" (Homme et al., 1968a, Clements & McKee, 1968).

Contingency management is defined as the systematic arrangement of reinforcing consequences of behavior, the objective of which, when applied to educational settings, is to achieve increased student performance. A contingency manager attempts to produce better student performance by establishing clear and dependable relationships between educational behavior, e.g., rate of learning and accuracy of responding, and the immediate results of that behavior.

Contingency Contracting. One contingency-management technique that has been successfully employed in many settings, including corrections, is the "performance" or "contingency contract." A contingency contract is a clear, specific, and fair statement of the expectancies of two parties--the student and the learning manager. It is a statement of contingencies, namely, "If you do this, you will get this." It is a statement of work to be performed, usually in a given period of time. The contract can be viewed as a stimulus leading to a response followed by a

consequence. Thus, it has the power to control behavior and at the same time to reinforce it. Reinforcement occurs upon task completion and the reporting by the student and manager (on the contract) of the fact that the task has been completed.

The contingency contract (see attached sample) may permit the learning manager to administer "points" contingent upon contract performance and completion. These points have a "cash-in" value, backup reinforcers, for money or privileges.

A contract is broken down into small segments or units to be mastered or achieved. Each unit has a value in its own right and can be viewed as a subcontract. The completion of the unit also provides a sense of "task completion" to the student--a powerful reinforcer in itself. When the conditions of the contract are not met, there may be negative consequences, else responsibility and commitment will not be taught or taken seriously.

Progress Plotters. Another contingency-management technique is the progress plotter, an example of which is the Efficiency Quotient (E. Q.) graph (attached) developed by the Experimental Manpower Laboratory for Corrections at Draper Correctional Center. The E. Q. is derived by dividing the number of module tests passed by the number taken, times 100. This percentage, obtained for the sum tests of each contract, is then plotted on graph paper. The E. Q. not only provides a quick reference for performance, but the student can also be reinforced by maintaining the line on the graph--the "efficiency line"--at a certain level, say, at the 85 percent point.

The above contingency-management procedures are but a couple examples of many more procedures which are available or that can be devised. The essential point here is that an effective and efficient IPI System has built into it some systematic approach to contingency management. All three variables require thoughtful handling. Thus, careful selection of stimulus materials and equipment, of the response mode (rate, accuracy, duration) and of reinforcing consequences (money or privileges earned, progress feedback procedures), all must be dealt with in a systematic fashion for effective learning. Less attention need be given to providing "synthetic" or extrinsic reinforcers if the IPI System is well structured and the materials themselves are intrinsically motivating, that is, if they are interesting and stimulating and meet a need of the learner which is obvious to him. A student in a vocational class in bricklaying, for example, readily seeks the skill in basic math which allows him to determine such things as how many bricks and how much time will be required for him to complete a job.

Still, the use of synthetic reinforcers may be necessary. Remember the fact that, for offenders, basic education was an early source of repeated failure and punishment--a condition they sought to relieve by avoiding school. So, it is frequently necessary to provide extrinsic reinforcers in order to generate motivation or interest. As a matter of fact, the offender may never "like" to learn adult basic education skills,

but the use of contingency-management techniques will at least get him "through" the material he must acquire.

Though a particular learner may never really "like" to learn, it is, of course, true that the more powerful the reinforcer the more work that will be generated. One experiment (de Risi, 1971) being conducted now seeks to link parole with points earned in basic education and with other contingencies as well. Correctional educators should find it very interesting to see how performance-contingent parole, incorporating basic education, is achieved. The significant fact here, of course, is that a step has been taken into one of the most crucial problems of corrections--creating a clear, realistic, and functional relationship between what takes place "inside" prison and what goes on "outside." This problem faces adult basic education programs in corrections as much as any other kind of in-prison training program.

Adult Basic Education Should Not Exist in a Vacuum

More often than not, adult basic education is taught without any attempt to relate it to the vocational goals of adults--whether they are inmates in a prison or students in "free-world" adult basic education programs. Yet, adult basic education classes flourish at night in high schools in every community in the nation. If the truth be known, most free-world students attend these classes for two basic reasons: to get a GED certificate and to overcome feelings of inferiority for having dropped out of school. These reasons are not strong enough in themselves for inmates to attend prison classes for long. They recognize the "phoniness" and unrelatedness of the requirement of the GED certificate to get and maintain a job, but they seek a GED because they are trapped like their free-world counterparts.

The regretful thing about the whole matter is that adult basic education programs, because their instructors come from the middle-class, college-striving culture, know little about the world of work and have little work exprience other than teaching. And it is for these reasons that they can't very well relate basic education skills to buying and selling, working as an auto mechanic, or applying measurement to construction work.

This same criticism holds for many prison educators throughout the country, for they teach the rules of grammar as if they were the end-all, percentages and decimals with few examples of real-life applications, and science that will never be applied. So what is the important objective in prison adult basic education programs, honestly? A GED certificate is a "meal ticket," a "piece of paper society says you ought to have," a symbol of accomplishment. It's phony all right.

And what role do adult basic education materials and equipment play in this "Mickey Mouse" game? The publishers and machine makers reinforce the rule makers. Everybody is on the bandwagon to promote the GED as the sine qua non of all good, honest, free people, as a rite of passage to many fine things of society.

How can integration of life goals and occupation training be incorporated into the curriculum of a basic education learning center? Two steps are required. First, a task analysis of the occupation must be done, which process will reveal what basic education skills are required for which occupation. The second step involves two operations, namely, curriculum development and individualizing the instruction for each student according to the occupation he is either training for or interested in. These tasks are onerous, time-consuming, and quite technical. The need is not of course limited to correctional training; the need is nationwide for nearly all adult basic education programs.

Many adult basic education instructors work fairly closely with vocational trainers on this matter. They confer with each other in both general and specific ways with regard to meeting the basic education needs of the occupation and the specific deficiencies of individual students. This is good, but it doesn't go far enough. A national, well-funded effort is required. The logical group to sponsor such an endeavor is the federal government, perhaps the U. S. Office of Education. The sooner the better.

Summary and Conclusion

Little attention was deliberately given to consideration of the prisoner as a special type of learner with peculiar styles of learning or as one requiring unusual instructional materials and equipment. To have done other wise would have, I believe, furthered the notion that the offender is different from the rest of the human population and that lawful "contingencies of reinforcement" (Skinner, 1968) simply do not apply. Such is happily not the case.

Certainly an IPI System in adult basic education must be tailored to a special situation, such as a correctional setting, and certainly reinforces will, in some respects, differ from those available in free-society settings. But an important fact to remember when we are discussing current adult basic education programs is that they, as well as nearly all other in-prison training programs, are not static, rather the entire complex of training programs is moving toward the long-range goal of bringing the two worlds of prison and free society together. As prisons and the activities that go on in them begin to more and more simulate the general nature of free, human society, then will prison life and prison training begin to shed its artifice and begin to approach its goal of preparing men for functional, independent, and productive lives beyond "the walls."

References

Clements, C. B., & McKee, J. M. Programmed instruction for institutionalized offenders: Contingency management and performance contract. Psychological Reports, 1968, 22, 957-64.

De Risi, W. Performance contingent parole: Behavior modification system for juvenile offenders. In M. A. Milan (Chm.), Modification of criminal and delinquent behavior by operant conditioning procedures: A new dimension to corrections. Symposium presented at the meeting of the American Psychological Association, Washington, D. C., September 1971.

Gilbert, T. F. Mathetics: The technology of education. Journal of Mathetics, 1962, 1, 7-73.

Hendershot, C. Programmed learning: A bibliography of programs and presentation devices (4th ed.). Bay City, Mich., 1967-68.

Homme, L. E., & Tosti, D. T. Contingency management and motivation. National Society for Programmed Instruction Journal, 1965, 4(7), 14-16.

Homme, L. E., & Csanyi, A. P. Contingency contracting-a system for motivation management in education. Albuquerque: Behavior Systems Division, Westinghouse Corporation, 1968.

Markle, S. M. Good frames and bad-a grammar of frame writing (2nd ed.). New York: John Wiley & Sons, 1969.

McKee, J. M. Materials and technology of adult basic education for corrections. NSPI Journal, 1971, X(5), 8-12.

McKee, J. M. Contingency management in a correctional institution. Educational Technology, 1971, 11(4), 51-54.

Skinner, B. F. The technology of teaching. New York: Appleton-Century-Crofts, 1968.

List of Resources for Adult Basic Education

Catalogs and Guides

Hendershot, C. H. Programmed learning, a bibliography of programs and presentation devices. Bay City, Mich.: Carl H. Hendershot (Supplemented).

The catalog come in two volumes. The various available programmed instructional materials are listed by subject in one volume and by publisher in the other. Each volume also gives the approximate number of hours required for completion, the number of frames in the program, the grade level, list prices, and "other information" for each entry.

The catalog is intended to encourage selective and proper use of programmed learning or programmed instruction. The listings do not

constitute a recommendation regarding quality or adherence to principles of programming.

Automated education handbook. Detroit: Automated Education Center (Supplemented).

A basic reference book in eight sections, headed as follows: (1) General, (2) Programmed Instruction, (3) Language Laboratories, (4) Computerized Educational Technology, (5) Administrative, (6) Curricular Considerations, (7) University Computer Centers, and (8) Appendices.

The "Automated Education Letter," published monthly, contains information on the latest developments in the field, new devices and machines, new instructional techniques and materials, conference and conventions to be held in the near future, and programs that have instituted new techniques, media, and methods of instruction. (A service of Automated Education Handbook.)

Programmed instruction guide. Newburyport, Mass: Entelek Incorporated (Supplemented).

The guide gives "recommendations for reporting the effectiveness of programmed instruction materials," a list of bibliographies of programmed teaching material, a list of periodicals, a list of publishers, a list of program devices, a coded index of programs, and a "data bank."

Journals and Publications

Newsletter and quarterly of the National Society for Programmed Instruction. Washington, D. C.: Catholic University.

Reports the use and development of programmed instruction in business, industry, the governmental services, and all levels of education.

Educational technology. Englewood Cliffs, N. J.: Educational Technology Publications, Inc.

Articles on new materials and techniques oriented to schools, industry, and higher education.

Training in business and industry. New York: Gellert Publishing Corp.

Articles on training practices, techniques, materials and equipment. Includes articles on programmed instruction.

Educate. New York: Gellert Publishing Corp.

A magazine for America's educational leaders. Articles on new materials, educational media, and instructional developments-including programmed instruction.

Audio-visual communications review. Washington, D. C.: Department of Audio-Visual Instruction. National Education Association.

Articles and reviews of publications of interest to those using programmed instruction. Vol. 14, No. 1, Spring, 1966, was devoted to programming.

Audio-visual instruction. Washington, D. C.: Department of Audio-Visual Instruction. National Education Association.

A wide range of articles with information regarding educational media, materials, techniques, and instructional developments.

Research in Education. Washington, D. C.: National Center for Educational Communication, Office of Education, U. S. Department of Health, Education, and Welfare.

A monthly abstract journal announcing recently completed research and research-related reports in the field of education.

Agencies and Organizations

Adult Education Association of U.S.A.
1225 19 Street, Northwest
Washington, D. C. 20036

Area Manpower Institute for Development of Staff (AMIDS)
One located in each of the following cities: Montgomery, Ala., Washington, D. C., Providence, R. I., Detroit, Mich., Portland, Ore., Los Angeles, Calif., Oklahoma City, Okla.

AMIDS provides technical assistance and staff development.

ERIC Clearinghouse on Adult Education
Syracuse University
Syracuse, New York 13210

ERIC Clearinghouse on Educational Media and Technology
Stanford University
Stanford, California 94305

Division of Adult Education
U. S. Office of Education
Department of Health, Education, and Welfare
Washington, D. C.

Experimental Manpower Laboratory for Corrections
Rehabilitation Research Foundation
Elmore, Alabama 36025

Northwest Regional Educational Laboratory
500 Lindsay Building
710 Second Avenue, Southwest
Portland, Oregon 97204

U. S. Bureau of Prisons
HOLC Building
101 Indiana Avenue, Northwest
Washington, D. C. 20001

CONTINGENCY CONTRACT

Name ______________ Date Started ______________ Contract No. ______________

Date Completed ______________

Module No.	Name of Course	Frames or Pages		Point Value		Test Score	Form
		Beginning	Ending				
					1.		
					2.		
					3.		
					1.		
					2.		
					3.		
					1.		
					2.		
					3.		
					1.		
					2.		
					3.		
					1.		
					2.		
					3.		
					1.		
					2.		
					3.		
					1.		
					2.		
					3.		
					1.		
					2.		
					3.		
					1.		
					2.		
					3.		
					1.		
					2.		
					3.		

Possible Points ______

Points Earned ______

Signed: ______________________

Student

____

Manager

EFFICIENCY QUOTIENT

Name: _____

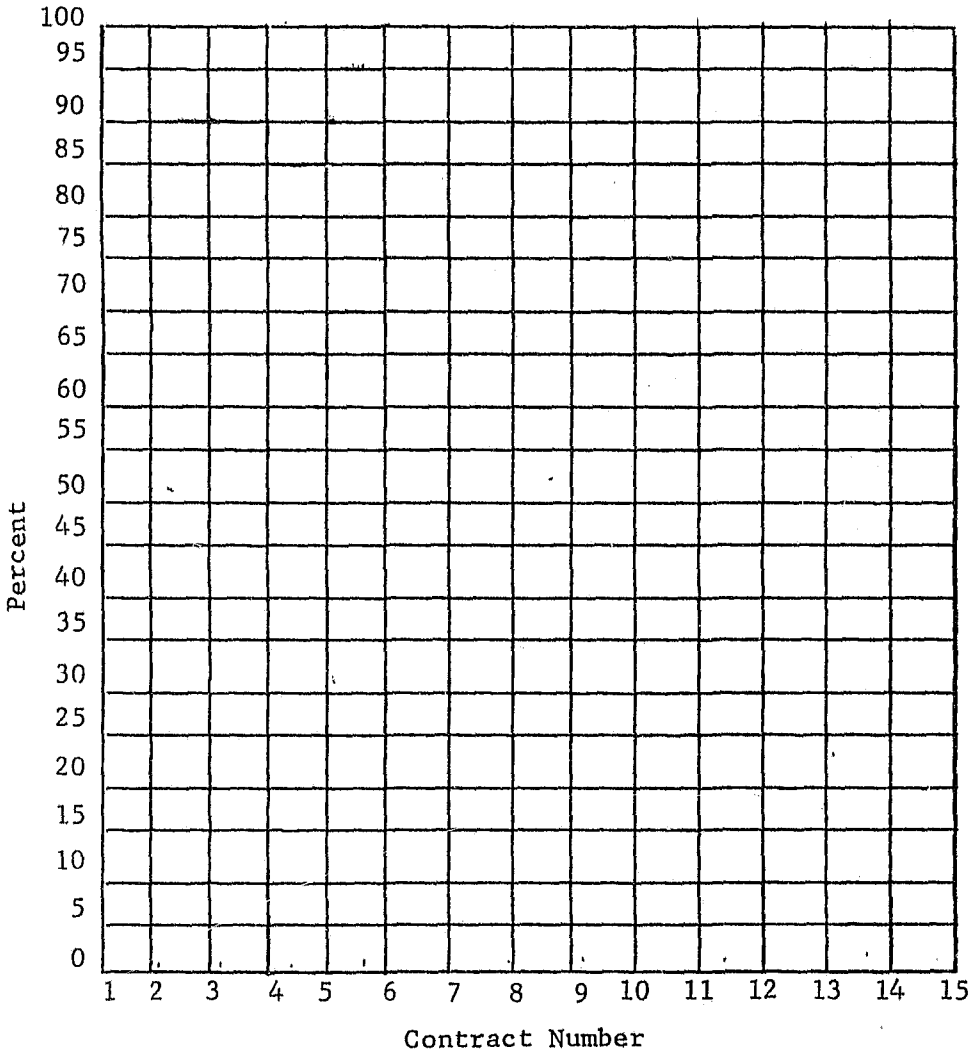

$$\text{Efficiency Quotient} = \frac{\text{Test Passed}}{\text{Test Taken}} \times 100$$

HARDWARE AND SOFTWARE SYSTEMS FOR ADULT BASIC EDUCATION

C. Donald Weinberg
Mercer County Community College
Trenton, New Jersey

In 1968, a survey of research in learning systems, entitled Towards A Significant Difference (U.S.O.E., 1968), examined all research in methods of instruction, and cut across all academic areas. It concluded that method of instruction did not affect either quality or the quantity of learning in any discipline. Methods chosen included standard classroom presentations, contract education and programmed instruction, each liberally interlaced with a variety of technology. This study, and an earlier study at the University of Michigan have been used as a basis for regarding learning innovation as an indication of sincerity on the part of education, but as an effort with only "local" implications at best.

There are two fallacies inherent in both studies:

1. Neither has examined content. It may have been that whatever the method of instruction or the technology used, the content itself was of such a nature that it *a priori* prohibited learning.

2. Percentages of successful learners remained stable, but the populations educated may have varied. If a book method of instruction were altered to television information on an experimental basis, the size of the groups of successful learners may appear to be the same in each case. However, the "visual learner" who could not learn via the book was being educated by television, but the "book learner" was now failing.

These studies are invaluable, however, not for the fact of their ostensible results, but because they have given direction to future effort.

The Educational System

Basically a system is a group of procedures and strategies used to achieve a given end. It essentially is the result of careful consideration, and is an amalgamation of the best methods capable of achieving a "part objective." In education, "systems," unfortunately, has generally come to mean self-paced instruction of one sort or another. The only alternatives here are that the learner can control the rate at which he wishes to proceed as well as the number of times he may repeat.

Self-paced instruction is not a true system; it is rather a single method, albeit one which permits a certain degree of latitude. Since it has been demonstrated, at Purdue, among others, that rather than appealing to the less motivated student, the highly motivated student takes advantage of self-pacing. At Purdue in the Basic Biology course, the average "A" student spent 3.8 hours in the learning laboratory; the "B" student, 3.2 hours; the "C" student, 2.7 hours; the "D" student, 2.1 hours; and the "F" student, 1.5 hours. It seems that this strategy alone does not resolve the problem of the under-achiever--the most likely candidate for adult basic education.

The Linear Program

One variety, and an improvement, of self-paced learning is the linear concept of programmed instruction. It is based on the Skinner theory of Stimulus-Response-Reinforcement: the stimulus is the question; the response the answer; and the reinforcement, the correct answer--whether it corrects or confirms the student's answer. When the program is properly written, each frame, an individual question, gives such small increments in learning that success is almost guaranteed. Errors can be corrected just by going back to a few previous frames and repeating.

On the surface, it would appear that the program would be a panacea. However, studies here have shown that the program is effective for both the low and high ends of the learning curve, but tends to be less effective towards the center. It also tends to be effective with the most basic or most rote kinds of learning, as it does not permit consideration of non-included alternatives.

The Branched Program

The Branched Program is self-paced with small increments, and is also based on the Stimulus-Response-Reinforcement concept. However, it adds in two areas:

1. Pacing. There generally are key questions which when answered correctly, enable the student to skip a part of the program and go on to the next key question.

2. Reinforcement. When questions are incorrectly answered, the student is diagnosed according to the nature of his error and referred to a "sub-program" specific to his <u>type</u> of error. Here the student might have four different incorrect responses, each of which can be dealt with as a separate conceptual reorientation.

The Branched Program has an advantage in that the student is enabled to skip whole areas of strength (linear programming assumes just go faster) and points up areas of weakness. Weak areas are not dealt with by simply supplying a correction to be memorized, but by providing the

rationale and the specific detail necessary for reinforcement required in areas of greater analytical content.

The disadvantage of this method is simply its size and logistical difficulty. The less able student is discouraged by a considerable manipulative task. The average and bright student, however, appears to do well.

Individually Prescribed Instruction (I.P.I.)

Individually Prescribed Instruction is a true system. It combines learning packages and a diagnostic placement and follow-up testing procedure. A student is initially tested to determine aptitude and ability levels. A reasonable set of interim goals are established and an initial package is prescribed for him with weighted-learning emphasis.

After each package is "completed" a new prescription is organized based on a posttest/pretest combination. This procedure is repeated until the interim objectives are reached. At this point the student may be retested on his ability and interest level, or an incremented set of interim goals may be established and a new learning prescription given.

The difficulties with this system are in the areas of test validation, and the assembling and creation of learning packages. Implementation depends on a strong file of institutional research from which the diagnostics are developed. In the absence of this, initial diagnostics must be in the category of educated guesses with refinement contingent upon experience resulting in on-going test modification.

The learning packages generally are an amalgam of semi-satisfactory, off-the-shelf materials and rough, locally produced materials. In the absence of the software to "fill" the prescriptions, the system bogs down on the drawing board.

Computer Managed Instruction - (C.M.I.)

Computer Management is a form of I.P.I. in which all the testing, diagnostic and prescription functions are done by a computer. While this requires the student to interact with a computer for testing purposes, all learning packages are non-computerized and external.

Computer Assisted Instruction - (C.A.I.)

Computer Assisted Instruction is conducted totally within the computer. The computer tests, diagnoses and prescribes as in C.M.I. In addition, all learning material is presented by the computer at a connected terminal.

Games

The purpose of the instructional game is to simulate the functional framework of a learning objective. The students act within the rules of the game making analytical decisions and winning or losing on the basis of these decisions. A simple example of a game would be a Monopoly type game for real estate majors, made somewhat more complex. There are games in Social Studies, Environmental Studies, Business, and are at all skill levels. Games may, or may not be computer-based and can involve single students or seminar size groups. In one Marketing game, teams from several colleges compete nationally.

The benefits of the game stem from the fact that it closely simulates the operating situation, giving an immediate application for learning. The student is able to practice in weak areas to gain insight into reasoning, and thereby gain in confidence and in understanding.

Terminal Equipment Systems for Self-Pacing Use

The learning carrel is a single unit, but is a system in that it may incorporate several modes of instruction. Basically, the carrel is a drawerless desk for a single student having frontal and lateral visual barriers. Usually all the barriers extend 18 inches high, the lateral ones extending 6 inches beyond the work surface as well. The terms "wet" and "dry" have been used to designate carrels with and without power, or other audio-visual equipment. "Wet" includes anything from an electrical outlet on up.

The variety and degrees of wetness are almost infinite, however, common variations include:

1. Audio cassette record/playback units

2. Synchronized audio-slide units with projection modules

3. Film loop, slide or film strip with rear projection modules

4. Television monitors for closed circuit playback

5. Dial Access audio and/or video terminals. Dial Access refers to a telephone-type system for calling (accessing) audio and/or video programs.

6. Computer terminal. Such terminals may be teletype or may include television retrieval on a special monitor (C.R.T. - Cathode Ray Tube).

Equipment Systems for Small Group Use

Terminals for individual and small group use may be similar. Small group systems should be designed for peer interaction as well as program interaction. Small seminar rooms should be used, as visual and audio barriers may be required. Materials for interpersonal use should be included on the most basic level; larger screens for all visual projection equipment. "Local use" equipment such as audio tape, ½ inch video tape or video cassette can be used for record/replay or role analysis and game situations.

Large Group Terminals

This terminal may include all sorts of projection and reception equipment, but no facilities for interaction in the standard sense. This, however, does not mean that there can be no communication or pacing. A response system here will provide a feedback and measurement device.

A response system provides a multiple button terminal at each student position. A question is posed, the student presses an appropriate button, his answer may be recorded individually and a combination of a group "percentage correct," "percentage incorrect," and "percentage not answering" measurements printed out. This enables the faculty member to keep track of student learning while still preserving the lecture format. Where responses are poor, the faculty member can repeat and reemphasize. Moreover, if enough student responses are recorded, prescriptions can be developed strictly from responses within the lecture format. Self-pacing can be attempted in that study time between lectures can be open-ended by having open learning labs.

Reinforcement during the lecture is also possible by having the correct answer flashed once all responses have been recorded. This is particularly important in that it stays within the Stimulus-Response-Reinforcement mode.

In order for software to be most effective selection of materials within individual areas should be the result of a rigorous process. Basically the following can serve as guidelines:

1. All print material must be on an appropriate level of vocabulary as to both grade level and social category. This is particularly important in both vocational areas and in life skills/social studies.

2. Materials should be paced, or pacable, to the appropriate speed of perception.

3. All materials are "field tested" by the publishers. Results of the field tests as they relate to access within the various categories sampled <u>are available and should be studied</u>.

4. Mode of instruction should be evaluated in terms of its applicability to both student and subject. For example, texts on manual skills should be highly visual rather than textual. In "hands-on" situations, audio-taped instruction with slides would seem appropriate. The purpose here is to allow the student to manipulate/analyze/interact with the subject matter rather than just learn it.

5. Mode of instruction and evaluation should not encourage learning the subject matter. For instance, courses which currently require extensive writing may inhibit learning, whereas a project method would both serve the purpose of instruction and attract the student.

6. The basis of improvement of instruction is the meeting of local needs, and the elimination of non-pertinent inclusions. All prospective texts and films should be rated and acquired on the basis of the absence of extraneous content. Permission to modify should be requested in writing as a condition of purchase.

7. Many audio-instructional packages are duplicated "in-house" in violation of the copy right laws. Where many duplicates of a single program are required, unlimited "in-house" duplication rights should become a condition of purchase.

Methods of Selecting Hardware

The variety of hardware is almost limitless. Most machines, however, fall into general categories with each manufacturer claiming that his modification is the ultimate. In general, whatever type of machine is decided upon, there are four general rules that apply:

1. Ease of service - is the machine constructed so as to make service quick and simple? Is the construction modular and plug-in, allowing simple removal and replacement of components?

2. Availability of parts - is there a nearby dealer with parts, or are parts only available from a central location?

3. Durability - is the machine constructed for heavy use, or is it a home machine put on the educational market?

4. Ease of operation - can this machine be used by an untrained operator, or does it require special training?

Types of machines are another matter.

1. Tape recorders. The cassette tape recorder is the most practical. While portable models offer transportability, auto-instructional machines should be A.C. and heavy duty. A mix of slide synchronizers, standard types, and playbacks, only should be considered. Foot-pedal operated ones are recommended for self-paced laboratories where hands-on use is required.

2. 8mm loop machines. The availability of the single concept, 2-4 minute silent, film cartridge has made several of these machines mandatory.

3. Film strip projectors. Audio cassette, sound film strip projectors give good versatility, and are both durable and simple to operate.

4. Slide projectors. Remote control carousel type synchronizable slide projectors offer the greatest versatility and can double as silent filmstrip projectors as well.

5. Overhead projectors. This tool is virtually replacing the blackboard. Some are available with glare-elimination, thus easing the burden of looking directly onto the writing surface.

6. 16mm projectors. A self-threading model offers the greatest reliability and the greatest ease of operation.

7. Video-tape. Half-inch compact machines with viewfinder cameras and a monitor can be purchased for under $1,400. Most Japanese brands are similar and offer interchangeability of tapes; a feature not available on the one inch or two inch format. Unfortunately there is very little in the way of pre-recorded half-inch tape, and the machines must be considered "local use."

Basic Production Equipment

Basic production equipment should consist of a thermal transparency maker, a carbon base dry copier for books, a slide maker, and a duplicating machine. A supply of audio cassettes and video tape should be available as well.

Reference

U. S. Office of Education. Towards a significant difference. Washington: U. S. Office of Education, 1968.

DEVELOPMENT AND USE OF TESTS IN THE INSTRUCTIONAL PROCESS

William H. Pahrman
Oregon State Correctional Institution
Salem, Oregon

Introduction

Since the beginning of civilization man has been tested in one way or another, thus we are certainly not creating a unique idea when we speak of testing in an adult basic education in corrections program. There are, however, certain criteria which we can develop in our testing programs. Some forms of achievement are relatively easy to test. An example is the 100-yard dash man on the track team whose results can be easily determined by the use of a stop watch. It is not this simple in the area of adult basic education in corrections.

We must realize the terms measurement and evaluation are not synonymous and should not and can not be used interchangeably. There is a relationship and it should be recognized. Measurement is the process of determining the amount of behavioral change in relation to the goals and objectives of both the learner and the program (Ryan, 1970). The measurement process yields quantitative information by which the learner and the program can be evaluated.

On the other hand, evaluation is the process by which measurement data are compared to a standard expressed in the stated goals and objectives. Therefore, the results of these comparisons are used to place a value on the progress of the individual, and to determine the effectiveness of the program.

It is essential that a thorough understanding of the relationship between programmed behavioral objectives, program planning, implementation of the program, and program measurement, is essential for an effective program evaluation (Ryan, 1970).

Measurement

Measuring changes which take place in the learner, although not an easy task to accomplish, should be done with as much objectivity and reliability as is possible so conclusions reached about the growth of the learner can be stated with a reasonable degree of assurance. Therefore, it is important that appropriate measuring devices and instruments be used. Reliability and validity are equally essential because it does little good to have a highly reliable instrument if it measures the wrong thing. Ryan (1970) takes the stand that:

> Without measurement of outcome there is no way of determining the amount of behavioral change which has occurred. The cycle

begins with a statement of behavioral objectives. Planned intervention is introduced for the purpose of achieving these objectives. Measurement determines the extent to which there has been change in the amount and degree of skill, intensity and direction of feeling, as a result of the hypothesized teaching plan. Measurement yields quantified data, which forms the basis for determining the worth and value of the teaching act, the educational system or sub-system.

The utilization of measurement techniques in adult basic education in corrections models, rests with the assumptions that:

1. Adult basic education in corrections should employ techniques of measurement used in other education environments.

2. The system of measurement of adult basic education in corrections needs revitalizing.

3. Measurement precedes evaluation and follows hypothesis testing.

4. Measurement must be related to prerequisites and behavioral objectives.

5. The purpose of measurement is not to test learners out of programs.

6. Measurement instruments from the public realm could become effective tools in the correctional setting when revised in accordance with existing conditions.

7. It is necessary to choose instruments which are suitable to the purpose intended.

8. Timing and presentation influence the reliability of the test results.

9. What is to be measured must be measurable.

10. Behavioral objectives must be written in measurable terms (Ryan, 1970).

The reasons for measurements in adult basic education in corrections are:

1. To obtain the quantified data necessary for evaluation in terms of prerequisites in behavioral objectives.

2. To provide the information needed as a basis for evaluation.

3. To determine the extent to which there has been change of behavior, and direction of feeling as a result of the teaching plan.

4. To determine the degree of the change in interest, attitude, value, and behavior.

Techniques for Measurement

There are many ways to measure, ranging from the very informal to the very formal; that is, personal observation to standardized tests. It is important to remember, however, to select an instrument that will produce the specific data required to make meaningful evaluations. Objective tests are generally preferred over selective types. Standardized tests may be administered to groups or individually depending upon the situation for which they can be used. Standardized tests are those for which norms have been established and include achievement tests, performance tests, personality inventories, aptitude tests, interest inventories, mental ability tests, questionnaires, diagnostic tests, and follow-up tests.

Likewise non-standardized tests may be administered either individually or in a group. Informal tests may be produced by teachers, interviewers, researchers, or administrators. Informal tests may be designed to measure cognitive, effective or psychomotor outcome, and may include achievement, performance, interviewing rating scales, and follow-up instruments. The performance tests may be administered through observation of a performed task against an accepted model or may be a written test designed to measure the knowledge level acquired by the learner. A follow-up test may be observation of behavioral changes, study of recidivism or actual on-the-job observation of use of knowledge and skill, or detail studies of the measurable behavior of learners in achieving the goals and objectives included in his institutional program. The selection of any measuring instrument must not be on the basis of personal preference. The instrument should be selected which will best measure the behavior to be evaluated. The instrument selected should be culturally free and produce reliable and valid results.

Timing of Measurement

Tests to determine extent to which adult basic education in corrections objectives have been achieved should be taken at five points in time:

1. Before the learner is enrolled in an adult basic education in corrections learning project.

2. At the time he begins the project,

3. During the project.

4. At the end of the project.

5. After a time interval following the completion of the project (Ryan, 1970).

In other words we are talking about:

1. Prerequisite tests

2. Pretests

3. Supportive-tests

4. Posttests

5. Follow-up

Prerequisite Test

Prerequisite tests in adult basic education in corrections would be a battery of standardized tests and interviews performed shortly after the offender arrives at the institution. The data from these measurements are used as a guide into adult basic education. Mager (1967) states that it is important to determine whether learners can perform as assumed they can. A test should be performed based on the prerequisite administered to each learner when he enters a course. The resulting data should be used to assign learners to remedial instruction or admit them to the course and revise the objective to include the missing skill.

At the Oregon State Correctional Institution each new commitment within the first two weeks after arrival at the Institution is administered a Metropolitan Achievement Test, (Elementary, Intermediate, or Advanced Battery, depending on his stated grade attained) to determine his academic level at the time of commitment. Furthermore, he is administered a GATB Test, an interest inventory list to determine his capabilities and needs. The Psychological Services administers an Otis Quick Score or Kent EGY Test to determine the IQ of the resident. The results, along with recommendations of the Educational Department and Psychological Services is collected by the Unit Teams and is utilized to determine the best program for the resident. For instance, not all the residents are in need of educational help, however, it may be determined that Psychological Services could better serve him while in the institution.

In a recent study performed at the Oregon State Correctional Institution using 220 new commitments from June 1971 through January 1972, it was determined that roughly one-third of the residents we are now receiving in the Institution have attained a high school diploma or a Certificate of Equivalency prior to commitment. This is somewhat higher than it has been in recent years. Five, six, seven years ago it was not

unusual to find less than 10 percent of the resident population who had attained a high school diploma or Certificate of Equivalency.

Pretest

The pretest is administered to the student when he enrolls in the class and before given any instruction. Quite simply, it is designed to find out how much he knows. This may be a standardized achievement test, reading readiness test, teacher-made test, or performance test. The course objectives provide the basis for constructing the pretest. The educational program should be so designed to determine the extent to which individual learners have progressed toward these objectives before training starts.

The pretest, as well as any test, should not be threatening to the learner. The learner should be made aware of the purpose of the test and realize he cannot fail. It should be the responsibility of the person administrating the test to be aware that the experience is not threatening and does not produce feelings of failure to the resident. We are all aware that persons who are incarcerated in correctional facilities have been confronted with failure all their lives. We should not compound that feeling of frustration and failure by intimidating the learner at the time of testing.

Supportive Tests

Swyhart (1970) presented a strong case in favor of supportive tests by stressing the importance of continuous measurement of the learner progress after he actually became involved in the program. A series of tests should be administered at intervals in the program to evaluate whether the learner has been responsive, or that the prescribed course of study was properly selected and what changes, if any, need to be made to improve on his educational development. For the most part, the supportive tests will be alternate forms of the prerequisite tests given prior to enrollment. The results of the first test are not always valid and other tests need to be taken to support the original findings. The process of continuous testing and re-testing will normally give an overall picture of each learner's progress, and at the same time allow the instructors and administrators the opportunity to measure the effectiveness of the instructional process.

At Oregon State Correctional Institution, after a resident has been in the Institution for approximately six weeks and all pertinent information and program recommendations have been collected by the Unit Team, composed of two Case Managers and a Correctional Corporal, he meets with the Unit Team to outline a program plan which appears most suitable to his needs. For example, the resident may be assigned to full time school for three months or until he attains an 8.0 grade level as determined by a standardized test. The teacher is made aware of the resident's needs and through programmed instruction, observation, and teacher-made tests

determines when the resident is at an 8.0 grade level and recommends retesting. The Unit Team programs the resident into programs on a priority basis and generally academic and/or vocational education rate high priority.

Posttests

It is quite obvious that a posttest is used to determine how well the student's performance at the end of the instruction coincides with the performance called for in the objectives. The object is not to see how well the student retains what he happened to be told during the course, the difference is what is important. The purpose of the posttest is not to measure learners against each other, it is much more meaningful to compare the learner's progress against established behavioral objectives. Tests should not be prepared, selected or used which pass or fail learners. Posttests are given at the end of the adult basic education program.

At Oregon State Correctional Institution posttests are given after the designated length of time given to determine to achieve a certain goal. The posttest used at the Oregon State Correctional Institution is an alternate form with the pretest and is designed to measure behavioral objectives attained and to show how close the student is to the predefined objectives. The results of the two tests should be compared to indicate or determine the amount of change which has taken place, if any.

Follow-up Tests

Follow-up testing is extremely important, but in corrections it is probably the most difficult to accomplish. The follow-up test is designed to be given several months after the learning experience is terminated and is desired to measure long term effects. If the learner remains in the Institution, it is of course relatively easy to administer. But many leave via parole, discharge, work release, educational release, and are extremely difficult to contact, particularly those residents who are on parole or discharge. If the resident is placed on work release program where he is able to spend part of his day in the general community, he would be available for follow-up testing. Assignments to educational release, manpower development training programs, Newgate Programs, facilitates follow-ups. However, the resident who leaves the Institution by straight discharge is much more difficult to post-test because in most instances we lose contact with them. However, by the use of questionnaires, personal interviews, and telephone interviews much posttest information can be gathered.

From the year 1964 to 1968, while engaged in a program at the Oregon State Penitentiary, teaching with functional illiterates, we did do follow-up testing with those inmates who remained in the Institution. This particular program was the initial teaching alphabet program and we did use a pretest, a posttest, and wherever possible follow-up with

a test. Since many of the men in the program were serving lengthy sentences, we were easily able to do a follow-up test six months or a year after completion of the program. We were of the opinion that our results were above our expectations. It is more difficult to achieve these results at Oregon State Correctionsl Institution as we have our residents a relatively short time. However, when possible we do administer follow-up tests.

References

Dickman, J. Programmed learning: What it is and what it does. The Journal of Correctional Education, Summer 1967.

Mager, R. Developing attitudes toward learning. Belmont, California: Fearon Publishers, 1968.

Mager, R. Preparing instructional objectives. Belmont, California: Fearon Publishers, 1962.

Mager, R., & Beach, K. Developing vocational instruction. Belmont, California: Fearon Publishers, 1967.

Michaels, W., & Kearns, M. Measuring educational achievement. New York: McGraw-Hill, 1950.

Pahrman, W. i/t/a means I teach adults. The Journal of Correctional Education, Fall 1966.

Ryan, T. A. (Ed.). Model of adult basic education in corrections (Experimental edition). Honolulu: Education Research and Development Center, University of Hawaii, 1970.

DEVELOPMENT AND USE OF TESTS IN ADULT BASIC EDUCATION IN CORRECTIONS

Frank C. Zimmerman
Arkansas Intermediate Reformatory
Tucker, Arkansas

Research (DuBose, 1970) in penology and psychological factors in motivational drives in inmate population plus inventions have caused dynamic alterations in programmed learning and tutorial approaches to teaching. Cultural and social values have changed; with the changes, a new philosophy of basic education has emerged. These changes emphasize the necessity to adjust and control these new conditions. Through basic education can come the development of human resources to match what seems an avalanche of needs brought to the surface in a violent-prone society.

Types of Offenders

Perhaps it would be well to discuss the types of offenders as advanced by the President's Commission on Administration of Justice (1967). According to the Commission, "classification systems have had quite different purposes." Some are immediately relevant to corrections, either in determining treatment or enabling more efficient and effective management of offenders in institutions. Some have less immediate implication, seeking out causes or explanations for criminal behavior that may bear on correctional treatment ultimately, but are not framed in those terms directly. While there are many overlapping areas among the different typologies, there seems to be considerable agreement about the validity, as a preliminary grouping, of the following major types of offender.

The Prosocial Offender

Most offenders of this type are viewed as "normal" individuals, identifying with legitimate values and rejecting the norms of delinquent subcultures. These offenses usually grow out of extraordinary pressures. They are most frequently convicted of crimes of violence, such as homicide or assault, or naively executed property offenses, such as forgery.

The Antisocial Offender

This type of offender identifies with a delinquent subculture if he resides in an area which has such a subculture or exhibits a generally delinquent orientation by rejecting conventional norms and values. He is usually described as "primitive," "under-inhibited," "impulsive," "hostile," "negativistic," or "alienated." It is generally agreed that he does not see himself as delinquent or criminal, but rather as a victim

of an unreasonable and hostile world. His history often includes patterns of family helplessness, indifference, or inability to meet the needs of children, absence of adequate adult role models, truancy in school, and inadequate performance in most social spheres.

It is generally agreed that the antisocial offender should be provided an environment with clear, consistent social demands, and also an environment in which concern for his welfare and interests is regularly communicated to him. Methods of group treatment are recommended in order to increase the offender's social insight and skill. In the last analysis, however, this offender's value system must be changed. The attempt to get him to identify with a strong and adequate adult role model is an important part of most treatment programs designed for this group. Treatment also aims at enlarging the cultural horizon of the antisocial offender, redefining his contacts with peers, and broadening and revising his self-conception.

The Pseudosocial Manipulator

This type of offender is described as not having adopted conventional standards, as being guilt-free, self-satisfied, power-oriented, non-trusting, emotionally insulated, and cynical. Personal histories reveal distrustful and angry families in which members are involved in competitive and mutually exploitive patterns of interaction, parents who feel deprived and who expect the children to meet their dependency needs, parental over-indulgence, alternating with frustration and inconsistent patterns of affection and rejection.

Many diverse recommendations are made for handling this type of offender. Some recommend long term psychotherapy. Others encourage the offender to redirect his manipulative skill in a socially acceptable manner. In general, the investigators give a rather discouraging picture of prospects for successful treatment.

The Asocial Offender

Another type of offender is one who acts out his primitive impulses, is extremely hostile, insecure and negativistic, and demands immediate gratification. An important characteristic is his incapacity of identifying with others. This distinguishes the asocial from the antisocial type who, although committed to delinquent values, is often described as being loyal to peers, proud and capable of identifying with others.

The asocial offender requires elementary training in human relations. The most striking characteristic of this group is an inability to relate to a therapist or to the social world around them. Most investigators recommend simple social settings offering support, patience and acceptance of the offender, with only minimal demands of his extremely limited skills and adaptability.

These types are presented, not to be academic, but to show some of the complexities in a systematic approach to adult basic education in corrections so as to avoid as many of the educational pitfalls as possible. An important pitfall to be avoided is the misplacement of the offender. Proper diagnostic testing will help to avoid placing the learner in the wrong class, reinforcing his self-belief that he is unable to learn, or placing him too low, causing him to want to drop out from sheer boredom.

Types of Tests

Of the many tests that were considered for this paper, the following are selected for discussion.

Kahn Test of Symbol Arrangement (KTSA)

The Kahn Test (Kahn, 1953) is a new approach to psychological testing revealing personality dynamics, mental health developmental levels, and extent of cerebral competence. The technique identifies the nature of the testee's cultural-symbolic thinking by analyzing his performance with the sixteen symbolic objects pretested experimentally. Administration of the tests takes approximately fifteen minutes. The scoring time is three or four minutes for those with some experience. This includes time to obtain the testee's symbol pattern and to draw his psychography on the Individual Record Sheet furnished with the test. Any individual symbol pattern can easily be compared with symbol patterns typical of a large variety of normal and clinical groups of adults and children. While permitting free projection, the test can also be relatively scored. Test performance has both verbal and manipulative aspects so that persons who are verbally blocked or unresponsive still give meaningful motor responses.

Uses. The test appeals to all age levels because of its challenging performance tasks with colored plastic objects having interesting and easily recognized shapes. It has proven successful in differentially identifying normals, neurotics, schizophrenics, and patients having organic brain pathology. Psychologists in schools and children's clinics find it effective in discriminating between emotionally disturbed and normal children. A percent of loss formula giving an estimate of decline of efficiency due to emotional stress, or loss due to brain damage is available. Visual comparison of aspects of rating performance yields an indication of prognosis of psychotherapy. Vocational counselors use the test to determine vocational interests relatively uncontaminated by environmental influences. In schools, hospitals, and correctional institutions the psychologist can use the signs of future adjustment level of aspiration and malingering which the test provides. The final test rate of symbol sorting reveals the relative emphasis the testee places on survival, identification, emotional expression, and guilt projection.

Reliability. Test-retest method of ascertaining reliability yielded a reliability factor of .95 on twenty-five cases of an unselected male group, retested after six months. Another group, including untreated hospitalized mental patients, was retested after periods of ten to two hundred and ten days and a retesting coefficient of .66 was obtained. An interscorer correlation of .97 was obtained for two scorers who had independently scored ten test records. This study was later repeated with twenty-five new records and two scorers who had not participated in any previous reliability studies. The correlation between the two sets of scores was .99.

Validity. Fourteen validity studies are abstracted in the new clinical manual which accompanies the test materials. Details of cross validation of the organic brain pathology score are available in the literature. Cross validation of the test as a screening device was carried out with the aid of recognized specialists in the field of statistics and applied mathematics. Other validity studies report the differentiation of schizophrenics from psychotics whose illness was caused by cortical lesions of various types. In one study fifty-nine types were found to be capable of differentiating a nonpsychotic from a psychotic group at better than the .01 level of confidence. In another study involving blind sorting by symbol pattern alone, only three normals and three neurotics were misclassified as psychotics out of a total of two hundred and ninety, of whom one hundred and fourteen were non-psychotics.

Full Range Picture Vocabulary (FRPV) Test

Ammons & Ammons (1954) describe the FRPV as an easy to use, highly reliable and valid individual test of intelligence based on verbal comprehension, taking only five to ten minutes to administer, with norms for chronological age two through adult level. There are two forms--A and B. No reading or writing is required of testee.

This test is used for (a) intelligence testing when time is restricted; (b) evaluation of stability of testee's personality and environment in terms of pass-fail scatter, a rapport is established because the testee finds it intrinsically amusing; (c) screening of large populations where paper and pencil would be of doubtful validity; (d) testing the physically handicapped (e.g., speech cases, cerebral palsy) where physical activity by testee is difficult, will give a good estimate of functioning; (e) testing aphasics, as a part of a regular test battery with one form at the start and one at the end; (f) to estimate attitude changes during testing in experiments where subjects are tested twice or more (there are two parallel closely-equivalent forms); (g) to obtain an estimate of intelligence quickly and unobtusively; (h) testing small children ages two to eight who find the test easy and interesting; (i) as an informal interviewing and projective testing procedure with the testee telling stories about "interesting" pictures where incorrect answers were given, which did not seem warranted by the general level of responding.

There are sixteen cards on each of which there appear four cartoon-like line drawings. The examiner has an answer sheet on which the words

to be used with each card appear. Testee is asked for which one of the four drawings best represents the particular word, and responds by pointing or by somehow indicating "yes" or "no" as the examiner points to each drawing. Thus the test can be given to anyone able to signal "yes" or "no" in any way interpretable, and able to hear or to read words.

Each response is checked right or wrong as testing proceeds. The examiner can total "rights" plus easier items within thirty seconds after testing is completed to obtain the score. Mental ages for two through sixteen and adult percentiles are read directly from a simplified table on the back of the answer sheet. Sample answer sheets for Form A and B come with the test as do sheets showing correct answers.

The Full Range Picture Vocabulary Test is uniformly high, ranging for various groups from .86 to .99, with a median of .93 and can, of course, be raised even higher by giving both forms of the test. The following estimates of reliability have been reported: .91 for one hundred and two black adults, Form A with Form B-12; .87 for sixty-one mildly to severely disturbed child clinic cases, Form B-16; .86 for eighty Spanish-Americans, Form A with Form B-11; .95 for fifty-two children, odd-even 5; .93 for one hundred and twenty preschool children, Form A with Form B-7; .99 for three hundred and sixty school children, Form A with Form B-8; .92 for seventy-one farm children; .93 for one hundred and twenty adults, Form A with Form B-9.

The validity is satisfactorily high. Estimates are attenuated by failure to take the curvilinearity of the relationship to the criterion into consideration in computation. The test does not discriminate well at below the two-year level, or at the superior adult level. As with all other tests, the correlation of FRPV scores with validity criteria is lowered by the less-than-perfect reliability of these criteria, and tends to be lower in the case of clinical as compared to normal groups. Validity is of course even higher when both forms are administered. The following estimates of validity have been reported: .76 with Stanford Binet for sixty male mental defectives; .91 and .82 with VIBS for one hundred and two black adults; .82 with WISC for sixty-one mildly to severely disturbed child clinic cases; .78 with Leiter International Performance Scale for fifty cerebral palsied; .84 with Raven Progressive Matrices for fifty cerebral palsied; .48 and .57 with WISC for sixty-one mildly disturbed cases.

Quite possibly some interesting research might be an extension of the test to the superior adult level; effects of cultural background on pattern of items passed and failed; restandardization in Spanish, French, German; extension of the test to levels below two years; relation between this measure or verbal comprehension and measures of verbal production; comparison of speed of recognition on this test and speed of visual perception; change of provability and/or latency of correct response as a function of difficulty level of words where subject is forced to guess; development of methods for objective use as a projective test; and development of group forms of the test.

Science Research Association (SRA) Tests

Science Research Association (1947) states that knowing the student's ability to learn is essential to a sound program of education and guidance. Learning ability is related to all human pursuits--school courses, careers, leisure activities. This ability is known as general intelligence, sometimes called the ability to learn, to solve problems, to foresee and plan, and to think quickly and creatively.

The SRA Verbal and Non-Verbal Forms have been developed through many years of research to furnish an objective index of student intelligence. They are short, quickly scored tests of general intelligence for use with all types of students from illiterate to genius.

Wide Range Achievement Test, 1946

The chief obstacle to a broad diagnostic program has always been the lack of achievement tests suitable for individual clinical work (Jastak, 1946). Despite the availability of a large number of achievement scales the writer knows of no test which would fulfill the criteria of a good clinical test. The most important requirements of such a test are low cost, individual standardization, ease and economy of administration, suitability of contents, relevance of the functions studied, comparability of the results over the entire range of skills in question.

The Wide Range Achievement Test was constructed with these factors in mind. Its contents are limited to the three basic subjects of reading, spelling, and arithmetic around which most school studies revolve. In all three skills the range tested extends from kindergarten to college. The word pronunciation test was selected as the most appropriate diagnostic tool of reading for several psychological reasons gleaned from individual studies of thousands of inferior readers. Reading disability is practically always a deficiency in the mechanics and not of comprehension. In fact, one of the most accurate definitions of the non-reader is that in reading he functions below the level of his general intelligence.

After determining the level of comprehension by means of intelligence tests, the examiner is not interested in how well the learner can comprehend, but in how well he can read. The paragraph and picture reading tests introduce elements into the test situation which may give an entirely erroneous view of the learner's reading ability. The average non-reader is an expert in guessing from context and from pictures. He may answer many questions correctly without actually being able to read the paragraph or the legend underneath the picture. In the word reading test his skill is assayed without the interference of context and comprehension. The test is, in this author's experience, one of the most reliable and valid tests of reading as a motor skill. Besides, its administration and scoring hardly ever consume more than five minutes. Its correlation with the New Standford Word Reading Test is .84 (389 cases of the 7th and 8th grades).

The spelling and arithmetic tests were given to 4,052 students. Approximately 1,500 of them took the tests individually and the remainder were given to class groups. The reading tests were administered individually to 1,429 students from kindergarten up to senior year in college.

Few psychological studies are complete without school achievement tests. Recent clinical experiences indicate that a thorough examination of a learner's personality should include not only several intelligence tests, but also tests of the school fundamentals. The correlation between intelligence and school achievement is moderately positive, but not as high as was believed years ago. This finding is consistent with the view that failure in school and in life adjustments may be caused by many other factors besides lack of intelligence. Thus it happens that a child of average or even superior intelligence may have great difficulties in learning to read or to figure, while a child of inferior intelligence may become relatively proficient in both reading and arithmetic. The administration of reliable school tests should determine to what extent the learner fails to work up to the level of his capacity in any of the basic subjects.

Another important aim of the school examination should be the study of discrepancies in the organization of learning abilities. Whereas some learners are uniformly well developed in all school functions, others show wide discrepancies between the accomplishments in the various subjects. A child of eleven whose intelligence and grade placement are normal may have sixth grade achievement in arithmetic and only second grade achievement in spelling. In some children the reverse is true. The discovery of such wide differences is important for the understanding of the child's personality and his school problems and for the institution of proper remedial programs. These discrepancies are oftentimes the only clue to an objective explanation of learning failures and conduct disorders. They reveal difficulties which the intelligence tests sometimes fail to unearth.

School test results are extremely revealing even in the study of psychotic adults. It may be sufficient to note that the high reading and low arithmetic scores tend to occur in abnormal mental states of a developmental nature and long standing as in neurosis and schizophrenia; while high arithmetic and low reading ability are more frequent in acquired psychosis due to alcoholism and syphilitic infection. A similar tendency seems to prevail in children. The neurotic and disorganized child is usually more proficient in reading than in arithmetic. If neurotic tendencies and special reading handicap occur together, the child may function far below the level of his true capacity in all school subjects. It must be remembered, however, that failure in arithmetic and failure in reading in the same learner may be caused by entirely independent factors.

For these and other reasons it has been the policy of our program to use school achievement tests on as many learners as possible. The additional time and energy spent on case studies is well repaid by a fuller understanding of the patient's problems viewed from a longitudinal and cross-sectional angle.

Wide Range Achievement Test, 1965

The Wide Range Achievement Test (Jastak & Jastak, 1965) was first standardized in 1936 as a convenient tool for the study of the basic school subjects of reading, spelling, and arithmetic computation. It was designed as an adjunct to tests of intelligence and behavior adjustment. The WRAT apparently satisfied an important need, as its use became widespread both here and abroad in a relatively short time.

The method of measuring the basic subjects was advisedly chosen to achieve the following ends: (1) to study the sensory-motor skills involved in learning to read, spell, write, and figure, (2) to provide simple and homogeneous content, (3) to avoid duplication and overlapping with tests of comprehension, judgment, reasoning, and generalization studied by means other than reading, spelling, and arithmetic, (4) to free diagnostic inferences from common confusions due to operational semantics, and (5) to permit validity analysis by the method of internal consistency.

Description of the Tests - Two Levels

The 1936 and 1946 editions of the WRAT had only one scale of achievement ranging from kindergarten to college in each of the three subjects. The 1965 version retains the same three subtests. Each subtest is divided into two levels, I and II. Level I is designed for use with children between the ages of five years zero months, and eleven years eleven months. Level II is intended for persons from twelve years zero months to adulthood. The revised edition consisting of two levels takes less time to administer although the number of items within each level is increased. Altogether, the three subtests take between twenty and thirty minutes to administer. The three subtests at both levels are:

1. Reading - recognizing and naming letters and pronouncing words.

2. Spelling - copying marks resembling letters, writing the name, and writing single words to dictation.

3. Arithmetic - counting, reading number symbols, solving oral problems, and performing written computations.

It should always be remembered that the validity of a test is determined by the needs of the administrator who is diagnosing the needs of the learner/offender.

One of the most popular diagnosing tests is the Wide Range Achievement Test (Jastak & Jastak, 1965). This is widely used in schools with students whose ages vary from five to twenty.

However, the test that is most used in Adult Basic Education in the Wide Range Achievement Test (Jastak, 1946). Most of these schools have

experimented with newer tests, then returned to the old 1946 model WRAT. This test divides the learners into three levels to such an extent that the starting textbooks are assigned. This, of course, simplifies the instructor's task during the learner's first school day, and it aids the administrator in keeping the tutorial rather than the class recitation concepts in the school. Thus, a student may enter school at any time rather than wait for a new semester to begin.

Another advantage of the WRAT is that it may be used in conjunction with other tests, self-made, and standardized. One of the foremost southern schools, the Learning Center of the University of Texas in Austin, uses a school-made questionnaire to complement the WRAT. This reinforces the validity of the test.

There is a trend among educators to refer to a test by any name but "test." This does not deceive the testee, in fact, it tends to make him suspicious.

In administering the WRAT, the best approach is to explain to the testee that this is an aid to the instructor in starting him in the proper book and that it is important to the testee that he must get no help that would cause him to start school on a higher level than he can achieve. On the other hand, he must do his best or he will be bored by the simplicity of his schoolwork. The principal emphasis must be placed upon the fact that it is impossible for him to fail.

It must be remembered that this new offender is apprehensive and sometimes antagonistic. A good instructor will counteract this feeling by holding an oral question and answer session for a few minutes before starting the test. A suggested question to the group might be "Do you understand how to become eligible for parole?" or "Have your mailing privileges been explained to you?"

No matter what test is used, it cannot be overemphasized that each testee must do his own work.

References

Ammons, R., & Ammons, H. Full-range picture vocabulary test (FRPV). Columbia: University of Missouri, 1954.

Dubose, J. H. Use of tests in adult basic education. In T. A. Ryan (Ed.), Collection of papers prepared for 1970 national seminars. Honolulu: Education Research and Development Center, University of Hawaii, 1970.

Jastak, J. Wide-range achievement test. Wilmington: G. L. Story Co., 1946.

Jastak, J. Wide-range achievement test. Wilmington: G. L. Story Co., 1965.

Kahn, T. C. Kahn test of symbol arrangement (KTSA). Columbia: University of Missouri, 1953.

President's Commission on Law Enforcement and Administracion of Justice. The challenge of crime in a free society. Washington: U. S. Government Printing Office, 1967.

Science Research Associates, Inc. SRA verbal and non-verbal forms. Chicago: Science Research Associates, Inc., 1947.

THE NEXT STEP

Paula A. Tennant
U. S. Board of Parole, Youth Division
Washington, D. C.

Today is graduation. You have completed an intensive seminar on educational programs and have defined and delineated a specific course of action for implementing this knowledge in your own institution. You have devised this program at some expense to yourselves in terms of energy and effort. Presumably, it is the best you can produce and as such has been approved by your instructors. The next and crucial step is to take these models back to your institutions and devise implementation strategies. You must convince your supervisors, co-workers, and inmates of the value of what you have developed here. You must, in effect, become a salesman and your program is the product that you will need to sell. All of us are exposed to a deluge of salesmanship through TV, newspapers, radio, and other media of public information. As a result, the precise act of selling or buying tends to be lost in the emotional appeals that surround the offered product. But even the best products in the world cannot be sold without appeal. And the most elaborate appeal will not sell a product unless it is directed toward an individual who is responsive to the appeal.

You may not have been aware of the fact that you went through a series of definable steps before being sold your latest washer, lawnmower, or car. You may have thought that the purchase was based on need or cost or what your neighbor had. While these factors and many others enter into sales action, progressing from just consideration of a product up to the decision to buy consists of precise definable steps which can be learned and practiced by anyone who wishes to sell a product or an idea.

Selling your product, the program you devised, will be the most important result of this seminar and it represents a vital test of your own career. Let's slow down the process of salesmanship and take a look at the steps which can result in success or failure depending on your understanding and use of essential elements.

These are the elements involved in every sale:

1. The product
2. The appeal
3. The decision

Each of these has a direct relation to the participants involved in the sale. You hopefully believe in and are committed to (1) the product, the buyer is the one you are trying to win over by (2) the appeal, and both you and the buyer will share in (3) the decision.

Looking first at the product, what is the most important consideration? The answer is, identification. The product must be imbued with substantial identification and one peculiar to itself; one that sets it apart from any like or similar product. Does this program you have developed have that characteristic? Does it have it for you; will it have it for the people to whom you will be selling it--or is it just an already known product with a slight change?

A visible, constant, repetitive thrust is needed to produce identification impact. It could be achieved by a name, title, or slogan, by the color or physical set-up of the program brochure, or by the time slot into which the program is fitted. You may be limited in number or kinds of modes you can use to identify your product and for that reason you may have to make total use of the few available to you.

Next, what kind of tests has your product been subjected to? Did you try it out on your instructor - participants in the seminar, or had you tested your approach on other buyers before you came to the seminar? Are there statistics to support the test results or are the results derived from empirical knowledge?

The tests which support your theory must be stated in concise and clear form. Statistics are impressive but they should be kept to a minimum and only those which directly prove a point should be cited. Subjective tests might be reported by quotations of responses of persons who have been exposed to the program in one form or another.

Another question to ask yourself is, are you convinced that your program is the best in the market? If you aren't, how do you expect to sell it to your supervisors, co-workers, and to the inmate? Your own conviction of the degree of excellence must be emphatic. In short, first you must sell yourself on its excellence and its primary place in the market.

If you are convinced, as you should be, that your program is the best in the market, you should be prepared to show wherein it excels other products. This excellence should be carried through your total presentation. Two or three points of excellence will afford convincing proof of your program's place as "best" in the market.

Does it have highly desirable and unique qualities? What are these qualities? How are they recognized? What has gone into your product that is not only recognized as highly desirable in an education program but also is different and special in the plan you propose? Is it addressed to a specific problem or is it a new overall approach? What have you built into your program that is unique?

The recognized and accepted basis for your program should be acknowledged but vary the manner in which you build on this recognized principal, veer from it, enlarge it, reject portions of it or approach it from a new angle. The unique quality must be emphasized. The innovations may be physical, approached by sight, hearing or touch. They may consist of

writing, reading, singing, acting or pantomime. But whatever, the innovations must be thoroughly emphasized.

Where does your product stand in the field of educational programming? Will it have status--promotable to a position of prestige--or will it be lost in the morass of monotonous mediocracy?

The area in the field of educational programming that is covered by your product need not be large, but its reputation in that area must be excellent. By reducing the scope of your program you can increase its intensity. Status is easier to achieve in a limited area, and prestige more naturally results when there is a sharp and controlled thrust.

Do you expect that your product will develop a reputation for excellence or had you not considered that a product's reputation is applicable to your program? How do you intend to promote its reputation? Had you considered that any promotion was necessary?

The Chinese have a saying that one picture is worth a thousand words. You must develop a picture of your program that will convey a positive "thousand words." Remembering that one negative statement or attitude can undo much of the normal good reputation that would flow from your program, you must produce and promote a reputation which will override the casual, careless, and caustic indifference of an uncommitted approach to reputation.

These six criteria concern you and the product you have worked so diligently to produce, i.e., identification, testing, place in the market, highly desirable and unique qualities, status and reputation.

If you think these criteria were just dreamed up to make a speech for the graduation of this seminar, I ask that you take a second look at them in light of some well known commercial products, for instance, a rent-a-car company whose slogan is to the effect that they try harder because they are number two.

The second element that needs your attention is product appeal and it concerns the buyer. There must be created in the buyer a desire for your product, an appeal that to him has a peculiar meaning. While the appeal must extend to a large number of people, each buyer must have a point of individual identification to himself. To him it is a special appeal, quite over and above what it means to any other person. It is a dominant, central fact in his consideration, this appeal that is directed and meaningful only to him.

Once the buyer discovers this appeal he then has other needs to satisfy. Prestige among other products is one. He wants to be able to compare this highly desirable product with others and to discover that there is a special prestige to be gained by selection of this product over any other.

Products are multi-faceted and the buyer is interested in the number of dimensions that the product has. This product of yours is an educational tool, but the prospective buyer is also interested in the other uses it may have. He will consider the possibility for successful use of the product in the same areas. The product's ability to be used in more than the obvious areas of employment, promotion, and association will also influence the buyer. A product with a high degree of usefulness is preferred over one that has only the conventional uses, for instance, a program leading only to obtaining a G.E.D.

Its usefulness or multi-dimensions leads directly to its position in competition with other products. The very fact of competition provides both a stimulation and frustration to the buyer. With several products all competing for attention, each will receive less attention than if only two products were competing. Unimportant and inconsequential facts may appear out of proportion. Emotional or transient appeals may outweigh more permanent and long lasting values. Competition itself which should be merely a process by which to achieve product consideration, can take on undue significance and affect the outcome of the sale all out of proportion to its importance. Your buyers will have many products competing for their attention, only a few of which will be in the field of education.

An additional important consideration is the longevity of the product. Education has seen a myriad of programs come and go, all holding out high hopes of spectacular achievement. Experimentation has been the name of the game but there has been a paucity of enduring successful results. If your product is just one more in this aimless meandering, do not expect impressive long term appeal--your product does not deserve it and will not command it.

The third element in the sale process is the decision, and it involves both you and the buyer. How does this occur? What is the moment of truth or the instant of commitment that achieves the sale?

It is very difficult to explore the substantive state of mind which exists at the moment of decision but one example has stayed with me for many years. I first read it about 30 years ago in a book on salesmanship by an author whose name I have long since forgotten. The process of a sale was likened to a small stream wandering through a meadow. There were grasses and rocks interfering with its free flow and the surface carried leaves floating and swirling as it moved along. The author likened the stream to the mind itself, each leaf as an idea (product) which floats through the mind, the grasses, rocks and other leaves as distractions or diversions which the mind is constantly encountering. Can you see the leaf-idea falling into the stream, swirling, caught in the grasses, checked by the rocks, bumping into other leaves and finally floating free, moving toward the center of the stream where the current is swiftest.

Only when it reaches this mid-point is it really free and in command of its progress. This for the leaf-idea is the instant of commitment, free from the grasses or distraction and the current of uncertainty. And it will last but for an instant, the approaching rocks and grasses and other floating leaves will soon engulf our leaf-idea and almost certainly it will never again achieve its instant dominant position, free flowing in the center of the stream. The leaf will lose its moment of truth and the fleeting instant of decision will be again engulfed with the myriad thoughts and ideas that constantly pass through the buyer's mind concerning the whole spectrum of events that comprise his day-to-day life pattern. The sale is lost--the product unbought.

Are you a salesman? Finding out is the next step.

EVALUATING

THE TOTAL SYSTEM

(7.0)

Introduction

> To determine effectiveness of an adult basic education in corrections project, it is necessary to know the kind of changes desired, the means by which the changes will be brought about, and the signs by which such changes will be recognized. These areas of knowledge constitute the essence of evaluation. T. A. Ryan

The seventh and last function in the Adult Basic Education in Corrections Model is perhaps the most important function of all. An accurate and complete evaluation of the total system is necessary to indicate program strengths, weaknesses, successes, and failures, and thereby indicate areas of needed change, readjustment, or refinement.

Ryan, in "Strategies for Evaluating Adult Basic Education in Corrections," defines evaluation, then proceeds to enumerate and discuss nine principles of evaluation which, when implemented, achieve effective evaluation. Lee, in "Evaluation of Adult Basic Education in Correctional Institutions," discusses 10 assumptions underlying an evaluation plan for educational programs in corrections. Lee discusses the applicability of the Program Planning and Budgeting Systems (PPBS) to the evaluation of an adult basic education program, then presents suggested procedures and criteria for evaluating an adult basic education in corrections program.

> Evaluation is the key to the design and implementation of viable, dynamic systems which will accomplish the mission of corrections--redirection of the offender into socially productive and civically responsible avenues. (Ryan, et al., 1975, p. 216).

Reference

Ryan, T. A., Clark, D., Hatrak, R., Hinders, D., Keeney, J., Oresic, J., Orrell, J., Sessions, A., Streed, J., & Wells, H. G. Model of adult basic education in corrections. Honolulu: University of Hawaii, 1975.

STRATEGIES FOR EVALUATING ADULT BASIC EDUCATION IN CORRECTIONS

T. A. Ryan
University of Hawaii
Honolulu, Hawaii

This paper defines evaluation, and presents basic principles of evaluation. It is addressed to those having responsibilities for evaluation of adult basic education in corrections.

Definition of Evaluation

Accurate assessment of educational outcomes is essential for sound planning and effective stimulation of growth in our educational structure. Assessment has always been an integral aspect of curriculum development and is especially critical in a time of awakened public concern, massive federal commitment and widespread professional reappraisal of our educational endeavors (Association for Supervision and Curriculum Development, 1965).

The evaluation process is concerned with judging worth or appraising value. Any object, action or information is capable of being appraised. A piece of property can be judged in dollars and cents. A human being can be judged by virtues and vices. An idea can be judged by its goodness and creativeness. A training program can be judged in terms of intended and unintended outcomes. An underlying principle which guides evaluation is that worth or value can be attributed to an object, action, or information, and the placing of value on objects, action, or information is done in relation to standards.

Suchman (1968) considers evaluation as a circular process, stemming from and returning to values. The process starts with formation of values, and results determine definition or redefinition of values. Formation of values is a judgmental process which involves deciding what is desirable, what would "good for mankind," and/or "what one would like to see happen." One could decide that "it is good for man to live a long time," or "it is good for man to be gainfully employed," or "it is good to live with one another in peace and harmony, without strife, riot, or violence."

In the correctional setting, adult basic education, through its projects and activities, attempts to bring about changes in the behaviors of offenders, changes in their knowledge, interests, understandings, attitudes, appreciation, and skills.

Evaluation of adult basic education in corrections is the process of determining the extent those changes are accomplished in light of the procedures and places for bringing the changes about. If planned-for

changes in offenders occur with expected frequency, considering the investment of resources, the decision-maker can place a high degree of confidence in his decisions and plans for adult basic education. On the other hand, if planned-for changes occur infrequently or unplanned for changes occur very often, there is need for the decision-maker to reorganize or modify his plans to assure the desired success levels.

The effects of adult basic education in corrections can be and should be assessed. The unique and significant factor about the formal educative process in corrections is that the learning environments and experiences are deliberately created and directed for the sole purpose of bringing about specifically defined changes in behaviors of offenders.

Adult basic education in corrections represents formal education intended to equip adult offenders with academic, vocational and social skills for entry into areas of occupational life, and to make these individuals capable of assuming their adult responsibilities. Adult basic education in corrections should develop the learner's basic educational skills as well as developing understanding, attitudes, and skills in society and realizing self-actualization.

Adult basic education, whether a total program consisting of related courses and practical experiences or special short-term learning experiences ought to be evaluated. Evaluation yields feedback which controls and directs definition of goals and objectives, planning of projects, creation of learning experiences, and techniques of measurement. Evaluation of adult basic education in corrections is essential for decision-makers to make valid judgments about the efficiency and effectiveness of their educational plans and programs.

Principles of Evaluation

Assessing the results of an educational project or activity in corrections must be done in a reliable and objective manner. Otherwise, there is the chance that erroneous conclusions will be drawn. Effective evaluation can be achieved by implementing nine principles of evaluation:

1. Objectives of training should be stated in terms of behavior changes of the learners (Bloom, 1956; Krathwohl, 1962; Mager, 1962; Mager & Beach, 1967). It is necessary at the beginning to decide exactly what changes are desired in adult offenders who will participate in the adult basic education activities. Determining whether or not these changes occur is the function of evaluation. It is important to define carefully these planned-for changes at the beginning.

2. The level of proficiency and the conditions under which the behaviors will be demonstrated when objectives have been achieved must be stated precisely (Mager, 1962). In determining effectiveness of a program, it is essential to have in mind the minimum performance which will be considered acceptable, and to specify the conditions under which the performance will take place.

3. The source of evidence for assessing adult basic education in corrections must be the persons for whom the project or activity has been planned. Adult basic education activities are designed to reach certain individuals. These persons are the only ones who can provide evidence of the success of an adult basic education project or activity. Success should be determined, not on the basis of whether the adult offenders who participated in adult basic education think it was a good project or activity, but rather in terms of the changes in their behaviors which implement project goals (New York Department of Education, 1967). If the evaluator defines incorrectly the individuals who can be expected to provide evidence of success of an adult basic education activity or project, this may result in underestimating success of the decision-makers' plans. A review of the adult basic education plan should enable the evaluator to identify sources of evidence of success of an activity or project. If the plan is designed to provide a specialized approach to teaching reading to offenders scoring below fifth grade equivalent on the Durrell Sullivan Reading Test, and if enrollment in adult basic education is on a voluntary basis, then only those adult offenders who participates in the full reading project could provide evidence of project success. It would not be appropriate to gather data from all those scoring below fifth grade level on the test unless all these individuals volunteered for the project.

4. The sources of evidence must be representative of the total group. The adult offenders from whom data are gathered to determine effectiveness of adult basic education in corrections must be representative of the total group participating in the project. The hoped-for changes in behaviors as a result of adult basic education in corrections will be concerned primarily with the offenders' social, occupational, personal, and civic adjustment after termination of participation in adult basic education. This means it will be necessary to gather evidence from those who were adult basic education participants, when they no longer are in the project, but still are in the institution, or after they have been released. The numbers involved, cost of data gathering, or difficulty in locating respondents may make it impractical to gather data from 100 percent of those who were adult basic education participants. In this case, data should be collected from a sample of the total population.

Whenever data are gathered from less than 100 percent of the population, it is essential that the sample from which data are gathered be representative of the group. If the total group is large enough, a random sampling method may be used, in which every person in the total group could have an equal chance to be selected.

If the group is small, stratified random sampling can be used to be sure of getting representation on all variables which might relate to or influence the adult basic education project.

5. The methods of obtaining evidence about effectiveness of adult basic education must be appropriate (Siro, 1943; Chapman, 1948; Goff, 1966; Arny, 1953). The techniques used to collect information depends

on the kind of evidence, the resources available for collecting information, and the people from whom information will be collected. Some evidence on effects of adult basic education in corrections can be gathered through use of standardized tests. Other information can be recorded on observation sheets, collected by recording results of performance tests, or obtained from use of questionnaires. The kind of evidence collected and the method selected for collecting evidence must be determined by considering what objectives are involved, who the learners are, and what was the nature of the adult basic education in corrections project.

Most skills should be tested in the context of the ongoing activity in which they will be used. Any valid skill test should involve use of the skill in an appropriate situation. If the learner can use a skill for the purpose for which he learned it, that is the most significant test possible. The task of the evaluator is to develop an approach to assessing skills which can be implemented while the actual process is going on. Regardless of the method of evaluation employed, it is essential that evaluation be made in terms of changes in behaviors of the learners, not in terms of what the instructors do or what decision-makers plan. Measurement devices and instruments must be designed specifically to elicit responses from which an observer can tell whether or not the offender has acquired the behaviors which implement the project objectives at the specific levels of proficiency (Wood, 1961; Gerberich, 1956; Remmers et al., 1960).

The methods of obtaining evidence of adult basic education in corrections effectiveness will differ for the institutional and post-release settings. The institutional setting lends itself to use of observation, case study, interview, self-report. The use of observer check-lists in a number of situations, including work detail, and recreation can be most enlightening. In the post-release setting, the questionnaire will be more widely used, since interviews, beyond the parole period, could prove too costly to warrant use of the technique. Full use should be made of interview and observation during the parole period. Check-lists, ratings, and data sheets from employers, and reports from family can contribute to the road of usable data gathered outside the institution.

A critical element to take into account is the method of gathering baseline data. The hoped-for result of an effective adult basic education project will be a change in behavior. Therefore, there must be provision for measuring change. This means measurements must be taken before and after the adult basic education in corrections project in which the offender participates.

An important element in evaluation is who collects the information concerning adult basic education in corrections. Consideration should be given to outside agencies, as this should have the advantage of minimizing the tendency to give socially desirable answers in the one hand, or for institutional personnel to reflect bias in their observations, on the other.

6. The results of measurement must be used to determine the extent to which individual learners have achieved objectives of the training program, and to provide information for use in modifying or improving instruction (Bradfield & Moredock, 1957). The primary purpose of evaluation of adult basic education in corrections is not to compare one learner against another, but, rather, to determine whether or not trainees have achieved a sufficiently high level of proficiency in behaviors implementing program objectives to be ready for progress to the next level of operation, that is, further training, immediate employment, or reemployment and to assess the effectiveness of the adult basic education in corrections project or activity.

Evaluation should be conducted with the idea in mind of enhancing learning and improving teaching. Evaluation should be aimed at helping the learner develop a realistic appraisal of his progress and needs. This means that evaluation always will be directed to measuring changes in behaviors of learners. Evaluation provides a comparison between the changes in behavior which would be expected to take place if objectives were realized, and those changes which in fact do take place between the time the learner starts a given training program and the time he completes the program. When the results of evaluation of all trainees in a program are considered as a whole, these data point up possible directions for program improvement or modification by indicating areas in which trainees show marked weakness or strength.

7. Use results from data collecting. Evaluation includes analyzing the results and applying these data to objectives, plans, and learning experiences to see where changes need to be made.

8. Evaluation should be continuous. The most effective evaluation is more than pretest-posttest measurement. It is continuous, carried out in relation to specific and immediate as well as long-range purposes, and provides feedback during the entire program.

External objective evaluation should be complemented by continuing self-study. The basic principles undergirding the process of evaluation apply to both the self-study and the external assessment of program effectiveness.

9. Feedback from evaluation must be reported and used. The potential worth of evaluation can be realized only if the evaluation process is carried to the point of preparing and submitting the evaluation report which will include recommendations for action. The Evaluation Report should contain three sections. The first section should describe the context, including a description of the general locale and the specific correctional system. Background information on the organization, and financial status of the system will be helpful in establishing the parameters within which the adult basic education in corrections project functioned. Some mention should be made of the needs assessment which preceded onset of the special adult basic education in corrections project.

The second part of the Evaluation Report should describe the Adult Basic Education in Corrections project. This description should include discussion of the scope of the program, the personnel, the organizational procedures, the activities, the equipment and materials, and the budget.

The third part of the program reports the evaluation. This includes the statement of purpose, goals, and objectives, followed by a description of participants. The last part deals with measurement of change, and include description of measurement techniques and instruments, application of persons taking measurements, and calendar for testing. The results are presented in tabular and diagram or figure form. Analyses are reported and these findings must be interpreted, to indicate success or failure, and point up the extent to which results are generalizable.

The most important part of the report is the final one, dealing with Recommendations. Recommendations which point up needed changes and suggest strategies for assessing changes, must be based on conclusions. This set of recommendations will influence the future of the adult basic education in corrections project, and in some measure will have an impact on policy-making in corrections.

Conclusion

The evaluation of adult basic education in corrections can make a major contribution to corrections and ultimately to the offenders and to society. The substance and methodology of adult basic education programs in corrections can be improved by utilizing evaluation feedback in program planning. The positive growth and development of the offender can be enhanced by tailoring training to his needs and characteristics, and social progress can be enhanced through feedback to indicate the extent to which social needs are being fulfilled as a result of adult basic education in corrections.

Evaluation of adult basic education in corrections is the study of planned projects and activities for producing changes in offenders. A thorough understanding of the relationship between project objectives, program planning and operation, and criterion measures is essential for evaluation to be effective.

To determine effectiveness of an adult basic education in corrections project, it is necessary to know the kind of changes desired, the means by which the changes will be brought about, and the signs by which such changes will be recognized. These areas of knowledge constitute the essence of evaluation. Knowing the kinds of changes desired calls for having in mind a clear idea of the values which will be implemented and being able to define in operational terms the outcomes which must be achieved to realize these values. The corrections decision-maker who wishes to realize the potential of evaluation for improving the process of adult basic education in corrections must be continually alerted to "what outcomes he would like to accomplish," "how he hopes to achieve these goals," and "what signs he will see to let him know the mission has been accomplished."

Corrections today is faced with the demand for public accountability. This can be accomplished only by implementing adequate procedures for determining goals and objectives; and methods for monitoring the extent to which planned adult basic education in corrections projects achieve these goals.

References

Arny, C. Evaluation in home economics. New York: Appleton Century Crofts, 1953.

Association for Supervision and Curriculum Development. Guidelines for National Assessment of Educational Outcomes. Washington: Association for Supervision and Curriculum Development, 1965.

Bloom, B. (Ed.). Taxonomy of educational objectives: Handbook I Cognitive domain. New York: David McKay, 1956.

Bradfield, J., & Moredock, H. Measurement and evaluation in education. New York: McMillan, 1957.

Chapman, A. Job evaluation manual. Rochester, N. Y.: Eastman Kodak Co., 1948.

Gerberich, J. Specimen objective test items. New York: Longmans, Green and Co., 1956.

Goff, M., & Jensen, G. Selected techniques for formulating the questionnaire, mechanics, and related materials of a follow-up procedure dealing with post secondary vocational technical graduates. Cheyenne, Wyoming: State Department of Education, 1966.

Krathwohl, D., Bloom, B., & Masia, B. Taxonomy of educational objectives: Handbook II Affective domain. New York: David McKay, 1964.

Mager, R. Preparing objectives for programmed instruction. San Francisco: Fearon Publishers, 1962.

Mager R., & Beach, K., Jr. Developing vocational instruction. San Francisco: Fearon Publishers, 1967.

New York Department of Education. Evaluation of effectiveness of a pilot program for underachievers, September, 1965-June, 1966. Albany, N. Y.: Department of Education, 1967.

Remmers, H., Gage, N., & Rummell, J. Practical introduction to measurement and evaluation. New York: Harper and Bros., 1960.

Ryan, T. A. Evaluation of vocational technical education and training. Honolulu, Hawaii: Education Research and Development Center, University of Hawaii, 1969.

Siro, E. Performance tests and objective observation. Industrial Arts and Vocational Education, 1943, 32, 196-97.

Suchman, E. Evaluative research. New York: Russell Sage Foundation, 1967.

United States Office of Education. Preparing evaluation reports. (OE 10065). Washington: U. S. Government Printing Office, 1970.

Wood, D. Test construction. Columbus: Charles E. Merrill Books, 1961.

EVALUATION OF ADULT BASIC EDUCATION IN CORRECTIONAL INSTITUTIONS

Allen Lee
Teaching Research Division
Oregon State System of Higher Education

As one contemplates the evaluation of adult basic education in correctional institutions, prudence demands recognition of certain realities, assumptions and standards. The Manual of Correctional Standards of the American Correctional Association (1966) in its Declaration of Principles states: "Both punishment and correction are at present our methods of preventing and controlling crime and delinquency. Further improvement and expansion of the correctional methods should be the generally accepted goal" (p. xix).

The Manual also notes the ancient Judaic doctrine of "an eye for an eye, and a tooth for a tooth" (p. 3) and the lack of sanction for this doctrine today. The Manual comments upon the world debate on the punitive versus the rehabilitative theory, and indicates that so far as the United States is concerned the debate is ended, in favor of the rehabilitation theory.

The prevalence of the terminology "correctional institution" also constitutes evidence of faith in rehabilitation--lending further importance and credence to the concept that education constitutes the greatest hope for improvement in the success of correctional institutions.

The need for improvement is emphasized by the Manual's statement that "There is no general agreement as yet on what constitutes success or failure on parole" (p. 27).

A recent study (Oregon State Board of Control, 1969) found that "The men able to remain free for at least one year were significantly more likely to have high level skills (21.5% vs 5.8%)" (p. 2). The study further noted "Recidivists usually took jobs requiring over 50 hours a week" (p. 2) and that "Nonrecidivists earned significantly more than recidivists" (p. 2).

Such findings and observations support a recent statement by John J. Galvin, Administrator, Oregon Corrections Division, that "Education is of major importance in our correctional institutions (conversation with the writer on December 10, 1969)."

Definition

The title of this presentation refers to "Adult Basic Education." To dispel any potential assumption that the reference is limited to literacy training, eighth grade or high school equivalency, the intent

here is to encompass at least the following goals excerpted from the previously mentioned Manual of Correctional Standards:

a) To offer an inmate sufficient academic education to enable him to face the needs of the world as a better-equipped person.
b) To provide vocational training so that he might take his proper place in society and be economically free and;
c) To offer cultural and hobby activities that will enable him not only to be better adjusted to his prison circumstances, but to broaden his area of interests and cultivate aptitudes looking forward to his return to civilian life. (p. 485)

In short, the reference to "Adult Basic Education" includes whatever type and level of education is most appropriate for the present and prospective needs of the individual.

Assumptions

The major purpose of this effort is to suggest a plan (procedures and criteria) appropriate for the evaluation of education programs in correctional institutions. As a prelude to that, the following assumptions are made:

1. Primarily, education in correctional institutions should be viewed and evaluated very much like education in any other environment.

2. Education programs in correctional institutions <u>need</u> improvement.

3. Improvement of instruction and administration of adult basic educational programs in correctional institutions affords a significant, and perhaps the greatest, potential for rehabilitation.

4. Desirable conduct is difficult, if not impossible, to legislate or dictate.

5. Those persons most immediately involved in an education program are uniquely in optimum position to identify strengths, weaknesses, and needs in the programs for which they have responsibility.

6. In the evaluation process, the perceptions of both professional and lay persons are needed.

7. The perceptions of teachers, students, administrators, and outsiders should be identified.

8. The evaluation should encompass both instructional and administrative dimensions of the education program, because, although instructional procedures are in need of improvement, the implementation and development of such improvements are limited by administrative factors (administration is also in need of improvement).

9. A third party (with no vested or immediate interest in the education program) should coordinate and summarize the evaluation.

10. The involvement of many types of people is essential to the identification and successful implementation of change for improvement in education programs in correctional institutions.

Implications of PPBS

PPBS (Program Planning and Budgeting Systems) is an increasingly prominent and promising concept which merits major attention today. Actually, PPBS may be viewed as merely a name for a systematic education planning and evaluation framework--designed to facilitate identification of priorities, decision making, and fundamental planning which should be, and to some extent has always been, done.

The limitations inherent in the scope of this presentation prohibit any adequate treatment of PPBS here; however, some pertinent observations are in order at this time to focus attention upon the importance of PPBS with regard to education programs in correctional institutions, and to suggest specific future action. The following statements are made accordingly:

1. Application of PPBS principles has been spectacularly effective in many kinds of state and federal activities.

2. PPBS embodies the concept that almost any enterprise can be improved through better management.

3. PPBS is being promoted by many federal and state administrators and legislators.

4. So-called "management analysts" are most frequently prominent in the application of PPBS.

5. Ideally, and probably essentially for success, PPBS should be adapted and applied to an education enterprise under the coordinating leadership of an individual who is competent in both management and education. The latter is most essential.

6. In general, there is a dearth of individuals who possess competency in both management analysis and in education.

7. PPBS has a significant potential for the improvement of education, and concurrently a highly undesirable potential for abuse and the perpetuation of mediocrity.

8. PPBS adapted and applied by persons not really schooled and experienced in the education enterprise will most often be found uncomfortable, ineffective, resented and damaging.

9. It appears not feasible to start from "scratch" and endeavor to train a management analyst in the intricasies of the education enterprise.

10. It appears quite feasible to orient an educationist in the intricasies of PPBS, so that he (the educationist) can (with the assistance of a management analyst) adapt and design PPBS for the education operation.

11. The current climate of taxation and budgeting concerns, especially for agencies such as correctional institutions, places much emphasis upon cost-benefit ration--or what returns are being achieved for tax dollars invested--and alternative courses of action.

Reasons such as those listed above merit the following recommendation: Instructional and administrative personnel in correctional institutions should devote special attention and effort to studying PPBS and adapting it to meet the needs of their education programs. A number of PPBS principles have prompted various evaluative criteria suggested hereafter.

Suggested Procedures and Criteria for Evaluation

The procedures and criteria hereafter recommend for use in evaluating education programs in correctional institutions are adaptations of similar elements which have been widely and thoroughly applied, tested and refined in many education institutions including elementary and secondary schools, junior and community colleges, state education departments, state vocational education agencies, and colleges and universities. They have proven quite effective. The basic procedures should be equally applicable to correctional institutions, although the criteria utilized for evaluation by the various committees should of course vary.

Immediately following is an overview of the recommended procedures for evaluation of education programs in correctional institutions. Next is an outline of the various areas of the education program which should be evaluated, and this is followed by more detailed descriptions of the procedures and the criteria (by areas).

Overview of Procedures

1. Self-Analysis. In this phase, administrators, instructional staff and students (inmates) should be divided into committees, and the respective committees given suggested criteria (guidelines or standards for comparison) to utilize in analysis of their own areas of responsibility for education in the correctional institution.

2. Use of a Visiting Team. In this (the second) phase of the Evaluation, an outside group reacts to the Self-Analysis conducted under item #1 (above). This Team should include such persons as an education official from a similar institution, a management analyst from the state executive department, a public school educator, a legislator, a prospective employer, a university person or two, and perhaps a parole representative.

3. A Report and Recommendations. This should be prepared by a third party (not a staff member in the Self-Analysis and not a Visiting Team member), and should include:

   a. A summary of the Self-Analysis.
   b. A summary of the reactions of the Visiting Team.
   c. Specific recommendations for improvement, with suggestions on timing, strategy and costs.

Suggested Areas to be Analyzed

1. Foundation for education program.
   a. Legal basis.
   b. Philosophy and objectives.
   c. Relationships with other agencies.

2. Administrative functions.
   a. Policy and policy formulation.
   b. Organization.
   c. Staffing.
   d. Financing.
   e. Planning.
   f. Directing.
   g. Coordinating.
   h. Communication.
   i. Researching.
   j. Supporting services.
   k. Facilities and equipment.

3. Instructional programs such as:
   a. Literacy.
   b. Eighth grade completion.
   c. High school completion.
   d. Vocational and technical.
   e. College.
   f. Graduate.
   g. Hobby and cultural.

For each of the areas suggested under items #1, 2, and 3 (above) a separate committee should be designated. Members should be instructors, administrators and students who are actually involved in the respective areas. The first activity of each respective committee should be to review the suggested criteria (guidelines, questions or standards) given to it. Each committee should have the prerogative to recommend additions, deletions and revisions in the suggested criteria. Next, each committee should achieve consensus in its assigned areas. Following this, the committees should convene together, with each reporting to the combined group, to achieve group consensus. The report of all the committees should be consolidated into a single Self-Analysis Report, for use by the Visiting Team to follow and eventually to be incorporated into a Final Report (such as indicated under part #3 of "Overview of Procedures" previously described).

With regard to the selection of a Visiting Team, suggestions should come from a variety of sources. After the Self-Analysis phase is completed, the Visiting Team should study the Self-Analysis Report, be convened on-site, observe and interview as necessary, and reach consensus on the various criteria involved in each area of the Self-Analysis.

It may well be found desirable for the Visiting Team to meet once as a group with the combined Self-Analysis Committees for interaction purposes after the Visiting Team has reached consensus. Any specific recommendations should, however, be posed only in the Final Report (item #3 under "Overview of Procedures"). The Final Report should be presented to the head of the correctional institution for such action as he deems appropriate.

The total evaluation (three phases) should be coordinated by co-chairmen; one, a staff member from the correctional institution and appointed by the head of the correctional institution, and the other from an outside agency.

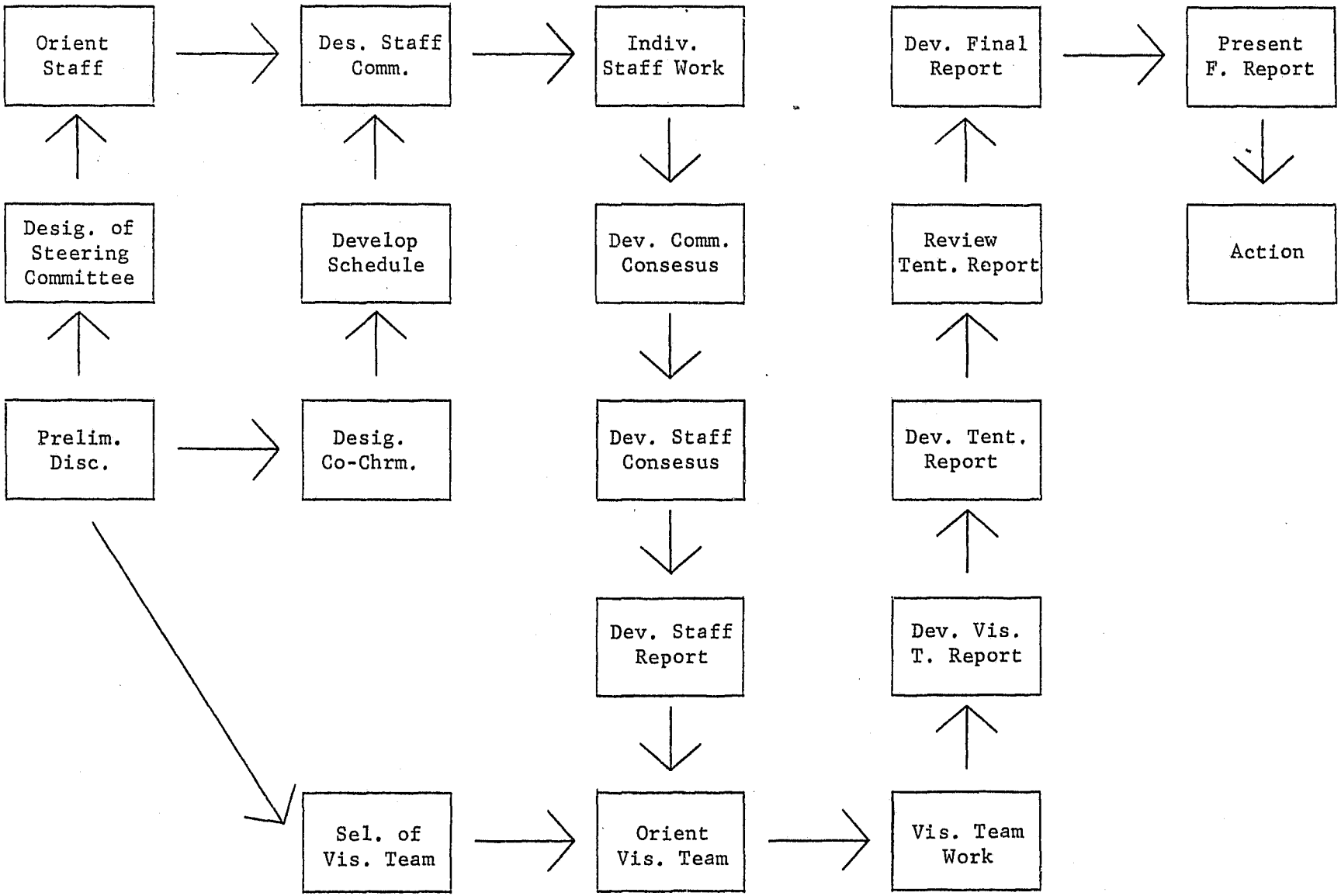

Figure 1. Diagrammatic overview of major activities and sequence.

After the respective committee for each area of the education program has reviewed the list of criteria and appropriate modifications have been agreed upon, each committee member should individually indicate his personal perception of response to each criterion, using the following symbols:

Symbols for Staff Committee Use:

Symbol	Meaning
E	Excellent
VG	Very Good
G	Good
S	Satisfactory
F	Fair
P	Poor
M	Missing and Needed
N	Missing but Not Needed

After each committee member has indicated his personal response on his "working copy" of the criteria, the committee should reach consensus. Thereafter, the several committees involved in the analysis should convene (if possible, together) and reach staff consensus on each report.

The objective is to maintain anonymity so far as personal opinions are concerned, and to identify group consensus for incorporation into a final written report. This applies not only to the Self-Analysis phase, but also to the Visiting Team phase of the evaluation.

After the Self-Analysis consensus has been reached and assembled as a staff Self-Analysis Report, this Report should be studied by the Visiting Team, which will subsequently record its consensus for each criterion, utilizing the following symbols:

Symbols for Visiting Team Use:

Symbol	Meaning
S	Would have given the same rating
+	Would have given a higher rating
-	Would have given a lower rating
0	Not rated

The following criteria for the respective areas are intended to be illustrative in this stage of development, and only tentative and incomplete. More work should be done before they are submitted for actual evaluation by an institutional committee. Also, after the criteria for each area are in relatively refined form, the respective committees should have the prerogative of recommending modifications and additions in the list of criteria per se prior to using the criteria for evaluation.

A. Suggested Criteria Concerning the Legal Basis for the Correctional Institution and Its Education Program (tentative draft):

Criteria	Staff Committee Analysis	Visiting Team Reaction
1. State statutes provide for the correctional institution and a director responsible for administering its education program.....	_____	_____
2. State statutes provide for a suitable administrative structure that fits the correctional institution for its role.....	_____	_____
3. State statutes and administrative rulings are sufficiently flexible to permit changes in the institution's pattern of organization for education to meet changing conditions and needs.....	_____	_____
4. State statutes and administrative rulings have made adequate provision to promote and assure workable cooperative relationships between the correctional institutions and agencies.....	_____	_____
5. State statutes and administrative rulings provide for coordination of prison industries and vocational-technical education shops for production and training.....	_____	_____
6. State statutes and administrative rulings provide for purposeful experimentation and scientific evaluation of the institution's education programs.....	_____	_____
7.	_____	_____
8.	_____	_____
9.	_____	_____
10.	_____	_____

11. What special strengths are apparent in the state statutes concerning the correctional institution?

12. What weaknesses are apparent in the state statutes?

13. Suggestions for improvement:

B. Suggested Criteria for Use by the Institution Staff Committee on Philosophy and Objectives (tentative draft):

Criteria	Staff Committee Analysis	Visiting Team Reaction
1. The correctional institution maintains an adequate written, up-to-date readily available statement of Philosophy and Objectives for its education programs.....	_____	_____
2. The current statement of Philosophy and Objectives represents the views of and is supported by the correctional institution's instructional and administrative staff, and its governing board.....	_____	_____
3. The Philosophy and Objectives provide for a program of education designed to meet the needs, interests and abilities of the individual inmates.....	_____	_____
4. The Philosophy and Objectives provide for use of citizen advisory committees to plan and improve the various education programs.....	_____	_____
5. The Philosophy and Objectives provide for literacy training.....	_____	_____
6. The Philosophy and Objectives provide for high school equivalency.....	_____	_____
7. The Philosophy and Objectives provide for college courses.....	_____	_____
8. The Philosophy and Objectives provide for graduate training.....	_____	_____

Criteria	Staff Committee Analysis	Visiting Team Reaction
9. The Philosophy and Objectives provide for hobby and cultural training.....	_____	_____
10. The Philosophy and Objectives reflect consideration of current major social problems and issues.....	_____	_____
11. (To be added by staff)	_____	_____
12. (To be added by staff)	_____	_____
13. (To be added by staff)	_____	_____
14. (To be added by staff)	_____	_____

15. What strengths exist in the statement of Philosophy and Objectives, the way in which it was prepared, and in its use?

16. What weaknesses exist in the institution's statement of Philosophy and Objectives, its preparation and its use?

17. Suggestions for strengthening the institution's statement of Philosophy and Objectives and the use thereof:

The examples (above) of criteria for the Legal Basis of the correctional institution and for its Philosophy and Objectives are intended to illustrate the kind of guidelines to be used by the correctional institution staff for Self-Analysis, and for the Visiting Team's reactions. Similar criteria for the remaining nineteen areas outlined under "Suggested Areas to Be Analyzed" earlier in this paper can be formulated from such sources as The American Correctional Association's "Manual of Correctional Standards." Limits of this paper preclude inclusion here.

Summary

Providing whatever education is necessary to meet the needs of each individual inmate (student) is essential to the success of correctional institutions today. Evaluation, including identification of strengths, weaknesses and needs as perceived by a variety of concerned personnel is essential to the planning of changes for improvement in education programs. Due to the social and political environment which exists, due consideration should be given to alternative courses of action, respective cost-benefit ratios, and other aspects inherent in PPBS. PPBS has a promising potential for the improvement of education in correctional institutions, but an appropriate design and realization of this potential will likely result only if made by persons thoroughly schools and experienced in the operation of correctional institutions and their education programs.

Evaluation is the foundation of the road to improvement, but to be effective it must involve all concerned, and this can successfully be done in the three phases of Self-Analysis (involving instructors, administrators, and students), use of a Visiting Inter-Disciplinary Team, with a Final Report (prepared by a third party) including specific recommendations for change with suggestions on timing, strategies, and cost-benefit ratios for alternative courses of action.

Because desirable conduct is difficult if not often impossible to legislate or dictate, the genius of this model for evaluation lies in the appropriate, timely involvement of various concerned people--thus assuring accurate, intelligent identification of improvements needed and the thorough understanding of all concerned. Most importantly, the process described affords the greatest potential for the financial support and personal commitment needed from teachers, administrators, students and legislators if proposed improvements are to be successfully implemented.

References

The American Correctional Association. Manual of correctional standards. New York: American Correctional Association, 1966.

The Center for Research andDevelopment in State Education Leadership, Teaching Research Division, Oregon State System of Higher Education. Format and criteria for analysis of state agencies for vocational-technical education. Monmouth, Oregon: Teaching Research Division, 1969.

The Center for Research and Development in State Education Leadership, Teaching Research Division, Oregon State System of Higher Education. A plan for analysis of community colleges. Monmouth, Oregon: Teaching Research Division, 1969.

Center for Vocational and Technical Education. Program, planning, budgeting systems for educators. Volume 1: an instructional outline. Columbus: The Center for Vocational and Technical Education, Ohio State University, 1969.

Hartley H.J. Educational planning - programming - budgeting. Englewood Cliffs, New Jersey: Prentice-Hall, Inc., 1968.

Lyden, F.J., & Miller, E.G. Planning programming budgeting. Chicago: Markham, 1967.

Oregon State Board of Control. A subcommittee report on vocational education programs in Oregon adult penal institutions. Salem, Oregon: Oregon State Board of Control, 1968.

Oregon State Board of Control. A follow-up study of vocational programs at Oregon State Penitentiary and Oregon State Correctional Institution. Salem, Oregon: Oregon State Board of Control, 1969.

Wildausky, A. Politics of the budgetary process. Boston: Little, Brown, 1964.

LIST OF CONTRIBUTORS TO VOLUME II*

ANTELL, WILL, Director of Indian Education, State Department of Education, St. Paul, Minnesota.

BARRETT, CHARLES M., Dean of Continuing Education Programs, Department of Community Colleges, Raleigh, North Carolina.

BENNETT, LAWRENCE A., Chief of Research, California Department of Corrections, Sacramento, California.

BOERINGA, GEORGE B., Program Specialist, Manpower Training, Community Colleges, University of Hawaii, Honolulu, Hawaii.

BOONE, JOHN O., Commissioner, State Department of Corrections, Boston, Massachusetts.

BRENT, J. E., Executive Assistant to the Director, Federal Youth Center, Englewood, Colorado.

CANNON, JOSEPH G., Deputy Commissioner, Department of Corrections, St. Paul, Minnesota.

DEBOW, GEORGE W. State Director, Adult Basic Education, State Department of Public Instruction, Pierre, South Dakota.

EASLEY, EDGAR M., Vice-President, Program Development, Communication and Education Services, Inc., Los Angeles, California.

ERICKSON, DON R., Warden, State Penitentiary, Sioux Falls, South Dakota.

FRANK, BORIS, Manager, Special Projects, University of Wisconsin Television Center, Madison, Wisconsin.

HALL, REIS H., Special Assistant to the Director, Federal Youth Center, Ashland, Kentucky.

HILFIKER, EUGENE E., Vocational Training Director, State Correctional Institution, Salem, Oregon.

HILL, LEONARD R., Director, Adult Education, State Department of Education, Lincoln, Nebraska.

HOUCHIN, CYNTHIA W., Administrative Assistant, State Department of Corrections, Little Rock, Arkansas.

JOHNSTON, C. J., Chief, Adult Education, State Department of Public Instruction, Des Moines, Iowa.

KEVE, PAUL W., Head, Department of Public Safety, Research Analysis Corporation, McLean, Virginia.

LEE, ALLEN, Research Professor, Teaching Research Division, Oregon State System of Higher Education, Monmouth, Oregon.

LYON, JAMES W., Principal, Frenchburg Correctional Facility, Frenchburg, Kentucky.

MCKEE, JOHN M., Director of Rehabilitation Research Foundation, Elmore, Alabama.

NELSON, LOUIS S., Warden, State Prison, San Quentin, California.

PAHRMAN, WILLIAM H., Education Director, State Correctional Institution, Salem, Oregon.

PARKINSON, JERALD D., Executive Director, State Board of Charities and Corrections, Pierre, South Dakota.

ROSSMAN, MARK H., Assistant Professor of Education, University of Massachusetts, Amherst, Massachusetts.

---

*Positions listed for contributors were those held at the time the papers were written.

RYAN, T.A., Program Director, Adult Basic Education in Corrections Program, Education Research and Development Center, University of Hawaii, Honolulu, Hawaii.

SHERK, JOHN K., Director, The Reading Center, University of Missouri, Kansas City, Missouri.

SHERRON, RONALD H., Adult Basic Education Project Director, Virginia Commonwealth University, Richmond, Virginia.

SNYDER, FRANK, Supervisor, Department of Adult Education, Montgomery County Public Schools, Rockville, Maryland.

SYBOUTS, WARD, Chairman, Department of Secondary Education, University of Nebraska, Lincoln, Nebraska.

TENNANT, PAULA A., Member of Youth Division, U. S. Board of Parole, Washington, D. C.

TRUJILLO, THOMAS M., Staff Director, Adult Basic Education Programs, State Department of Education, Santa Fe, New Mexico.

UDVARI, STEPHEN S., Associate Project Director for Research and Rural Family Development, University Extension, University of Wisconsin, Madison, Wisconsin.

WEINBURG, C. DONALD, Director, Instructional Media Center, Mercer County Community College, Trenton, New Jersey.

WILLIAMS, JAMES A., Education Supervisor, Missouri Intermediate Reformatory, Jefferson City, Missouri.

ZIMMERMAN, FRANK C., Education Director, Arkansas Intermediate Reformatory, Tucker, Arkansas.

END